2016

Hydraulic Valve Manifolds

Daman Products Company, Inc.

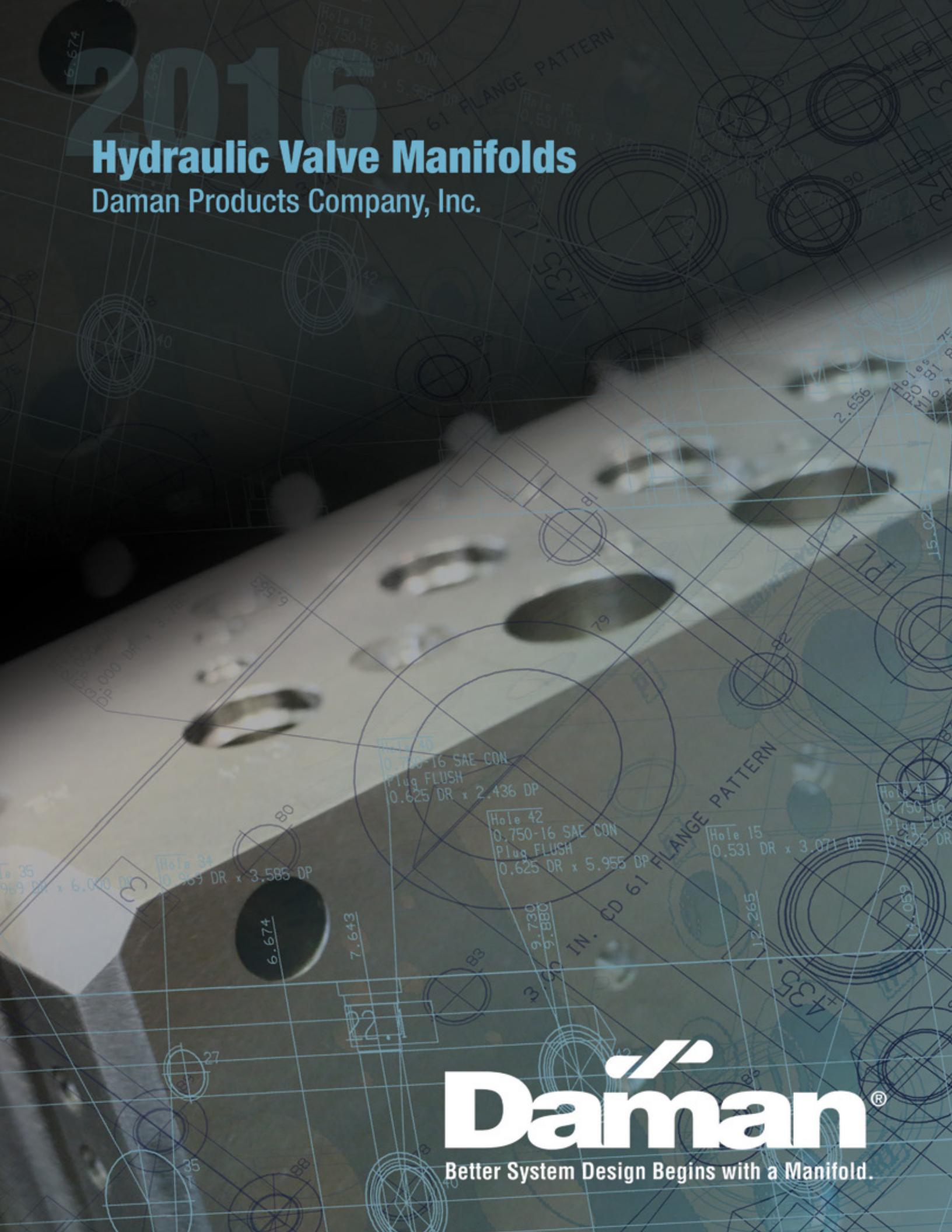

Daman®

Better System Design Begins with a Manifold.

DamanWorks

ONLINE STANDARD PARTS INTEGRATOR

No Software Download Required!

INSTANT ONLINE ACCESS TO STANDARD 2D AND 3D PRODUCT MODELS

- Configure hundreds of thousands of possible Daman standard part numbers
- Preview your part in four different previewing formats
- Download 3D models in 100 different formats including native formats for top software applications
- Include the manifold in the overall hydraulic power unit or machine design model with very little effort

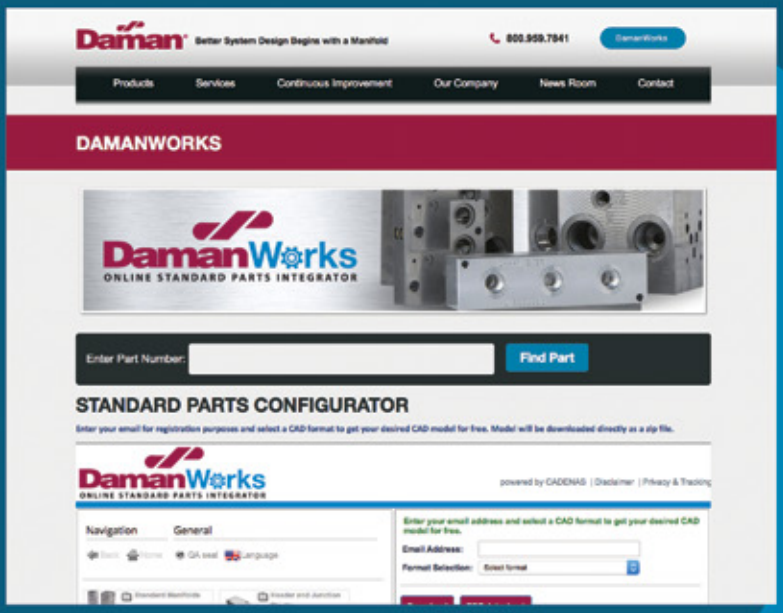

YOU CAN NOW SEARCH BY PART NUMBER WITH OUR ADDED SEARCH FEATURE

VISIT WWW.DAMAN.COM TO GET STARTED!

2-4 CUSTOM PRODUCTS

5-66 STANDARD MANIFOLDS

67-84 COVER PLATES

85-110 VALVE ADAPTORS

111-136 SUBPLATES

137-154 SERVO VALVE SUBPLATES

155-178 TAPPING PLATES

179-198 CARTRIDGE VALVE CAVITY BODIES

199-224 HEADER AND JUNCTION BLOCKS

225-242 TECHNICAL INFORMATION

243-246 AVAILABLE COATINGS

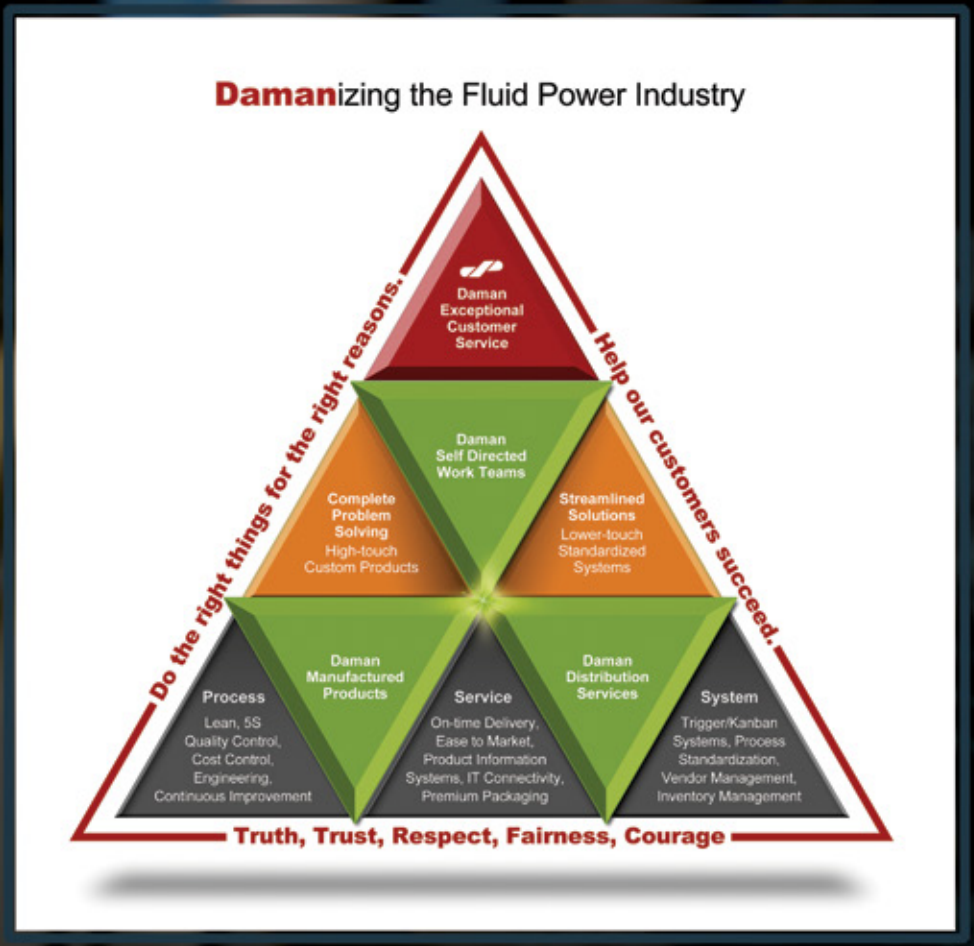

THE DAMAN WAY

The Daman way of doing business means we go beyond traditional definitions of manufacturing products and providing customer service. We understand the drive for increased efficiency and improved throughput. We aggressively work with our suppliers and sales channels to reduce waste and redundancy throughout the supply chain. Simply put, we are industry experts in developing ideal organizational systems and successful business relationships.

Daman®

DEMAND DAMAN
EXPERIENCE THE DIFFERENCE

Our team is an extension of your team. Provide your custom concepts in any form, from a freehand schematic to a fully-engineered design. We will support your needs to efficiently manufacture a new custom manifold in as little as four weeks (varies based on demand). Repetitive, low-volume custom manifolds can be shipped within 24 hours by utilizing Daman's Trigger System (see inside back cover for more Trigger details).

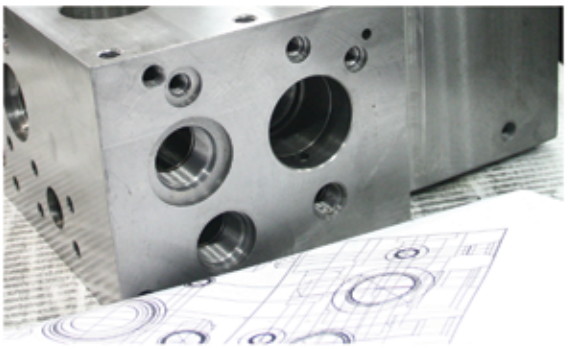

DAMAN'S PRODUCT MIX

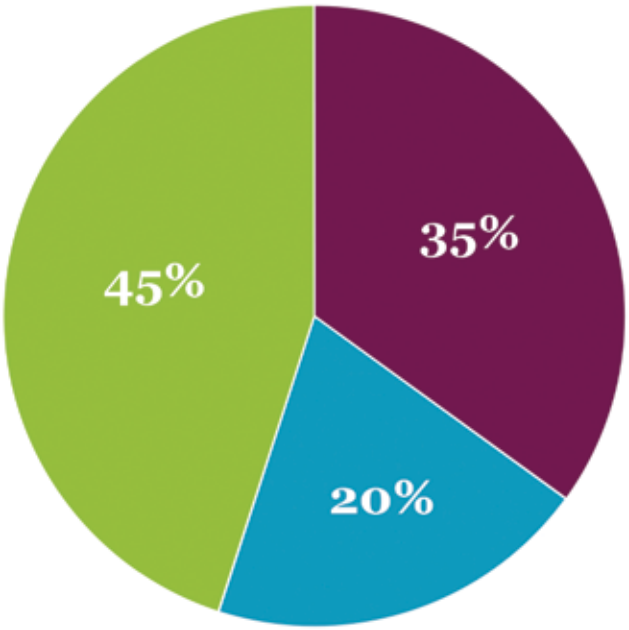

- Custom Manifolds in our Trigger program
- Custom Manifolds built to order
- Standard Manifolds

SUBMIT YOUR CUSTOM MANIFOLD RFQ TODAY!

RFQ Details – Required

- Hydraulic circuit diagram
- BOM list of valve part numbers used
- Port sizes
- Port type (SAE, NPTF, flange, metric, etc.)
- Material type (aluminum, ductile, iron, etc.)

RFQ Details – Optional

- Specific layout requirements (valve or port locations, etc.)
- Surface coating requirements
- Anticipated annual usage

Visit Daman.com to download our RFQ Checklist and expedite the quoting process.

Daman®

1811 North Home Street - Mishawaka, Indiana 46545-7267 USA
North America: 800.959.7841 · Fax: 800.241.7664
International: Tel: +1.574.259.7841 · Fax: +1.574.259.7665
Email: sales@daman.com · Web: www.daman.com

DRIVING EXCEPTIONAL PERFORMANCE

Let our Daman team take care of your needs for the entire Custom Manifold process including: manufacturing, circuit diagrams, cost quotations, manifold design, troubleshooting, sales and technical support.

CUSTOM MANIFOLD CAPABILITIES

- Daman has manufactured Custom Manifolds since 1976
- 75,000 sq. ft. facility with 50,000 sq. ft. dedicated to manufacturing
- 65% of Daman's capacity is devoted to Custom Manifolds
- Custom Manifold quotations processed in 24 hours or less for most projects
- Large manifolds up to 4000 lbs.
- Maximum envelope size: 40" x 40" x 67"
- Ability to machine stainless steel, carbon steel, ductile iron and various grades of aluminum
- More than 145 Custom Manifold quotations processed every week
- 41% of Custom Manifold quotations are converted to orders
- 99.87% manufacturing accuracy rating
- 98.60% design accuracy rating
- 99.55% on-time delivery rating
- 10 full-time designer and support staff with over 250 years of combined project design and sales support experience
- State-of-the-art design capabilities using manifold-specific software
- Award-winning industry recognition for our world-class cellular manufacturing practices using Lean processes
- 16 CNC Machining Centers
- Over $320,000 invested in dedicated tooling and inspection equipment
- $750K Ultrasonic Wash investment
- Inventory of more than 700 cartridge cavity tools for all major valve manufacturers

Daman®

STANDARD MANIFOLDS

Subplate Mtd. Valve Cross Reference	Page 7
D02 Parallel Manifolds	Pages 8-9
D02 Series Manifolds	Pages 10-11
D03 Std. Flow Parallel Manifolds	Pages 12-13
D03 Std. Flow Bottom Ported Manifolds	Page 14
D03 Tank Line Feed Circuit Manifolds	Page 15
D03 High Flow Parallel Manifolds	Pages 16-17
D03 High Flow Flange Ported Manifolds	Pages 18-19
D03 High Flow Bottom Ported Manifolds	Page 20
D03 Series Manifolds	Pages 22-23
D05 Std. Flow Parallel Manifolds	Pages 24-25
D05 Std. Flow Bottom Ported Manifolds	Page 26
D05 Tank Line Feed Circuit Manifolds	Page 27
D05 High Flow Parallel Manifolds	Pages 28-29
D05 High Flow Flange Ported Manifolds	Pages 30-31
D05 High Flow Bottom Ported Manifolds	Pages 32-33
D05 Extra High Flow Parallel Manifolds	Pages 34-35
D05 Std. Flow Series Manifolds	Pages 36-37
D05 High Flow Series Manifolds	Pages 38-39
D07 Std. Flow Parallel Manifolds	Pages 40-41
D07 High Flow Parallel Manifolds	Pages 42-43
D07 High Flow Flange Ported Manifolds	Pages 44-45
D07 Series Manifolds	Page 46
D08 Std. Flow Parallel Manifolds	Pages 48-49
D08 High Flow Parallel Manifolds	Pages 50-51
D08 High Flow Flange Ported Manifolds	Pages 52-53
D08 Series Manifolds	Page 54
D10 Std. Flow Flange Ported Manifolds	Pages 56-57
D03/D05 FlexMount Manifolds	Pages 58-62
Mounting Bracket Riser Blocks	Page 63
Mounting Hardware	Pages 64-65

Daman®

Subplate Mtd. Valve Cross Reference

Daman / NFPA pattern no.	ISO no.	Bosch	CEI	Contin-ental	Denison	Nachi	North-man	Parker	Rexroth	Rivett	Vickers
D02	4401-02-01	--	--	--	--	--	--	--	--	--	DG4V-2
D03	4401-03-02	FD4-**HS-*01	--	V*D03M E*03M V*5M	A-3D01 A4D01 4DPD01	SA-G01 SS-G01 DMA-G01	G02	D1VW	WE6	6***-D03	(K)DG4V-3
D05	4401-05-04	FD4-D*KS-*02	VS-52	ED05M V*12M	A-3D02 A4D02 4DPD02	SS-G03 DMA-G03	G03	D3W	WE10	6***-D05	DG4S*-01 DG4V-4 (K)DG4V-5
D05 Alt. A (D05HE)	4401-05-05	--	--	--	--	--	--	D31DW	WEH10	--	(K)DG3V-5 (K)DG5V-5
D05 Alt. B (D05H)	--	FD4-**HS-*02	--	--	--	--	--	D31W D31VW	--	6***-D05H	DG5S4-02
D06	--	FD4-**HS-*04	VS-63	--	--	--	--	--	--	--	DG4S4-02 (obsolete)
D07	4401-07-06	081WV16P1	--	--	A-3D03 A4D03 4DPD03	DSS-G04	G04	--	WEH16	--	DG5S4-04 (K)DG3V-7 (K)DG5V-7
D08	4401-08-07	FD4-**HS-*06	VS-86	V*D08M ED08M *VS50M	A-3D06 A4D06 4DPD06	DSS-G06 HF(S)-G06	G06	D61VW	WEH22	6***-D08 6***-D08H	DG5S-(H)8 (K)DG3V-8 (K)DG5V-8
D10	4401-10-08	FD4-**HS-*10	--	VSD10M V*100M*	A-3D10-35 A4D010	DSS-G10 HF(S)-G10	G10	D101VW	WEH32	--	DG5S4-10 (K)DG3V-10 (K)DG5V-10
2F06	6263-06-05	FF2-*HS*-02*	--	F12M	2F1C02	(C)FT-G02	--	FG3PKC	2FRM10	--	F(C)G-02
2F07	6263-07-09	FF2-*HS*-03*	--	--	2F1C03	FT-G03	--	--	2FRM16	--	F(C)G-03
P06	6264-06-07 5781-06-07	FD2-PTHS-*03 081DV10P1	--	--	R4*03	--	--	PR*3M	S*10P DZ*10**	P48**03	R(C)G-03
P08	6264-08-11 5781-08-10	FD2-PTHS-*06 081DV25P1	--	E*35M	R4*06	HT(S)-G06	--	PR*6M	S*20P DZ*20**	P48**06	R(C)G-06
P10	6264-10-15 5781-10-13	FD2-PTHS-*10	--	--	R4*10	HT(S)-G10	--	PR*10M	S*30P DZ*30**	P48**10	R(C)G-10
R06 (I06)	6264-06-09	081DV10P3	--	--	--	RI-03	--	--	DB**10	--	CG-03
R08	6264-08-13	FE1-PB**-S06* 081DV25P3	--	--	--	RI-06	--	--	DB**20	--	--
R10	6264-10-17	FE1-PB**-S10*	--	--	--	RI-10	--	--	DB**30	--	--
I08 (RV08)	--	FE1-PB**-I06*	--	--	--	--	--	R6V	--	--	CG-06
I10 (RV10)	--	FE1-PB**-I10*	--	--	--	--	--	R10M	--	--	CG-10

Daman Products Company, Inc. • 1811 North Home Street • Mishawaka, IN 46545-7267
Tel: 800.959.7841 574.259.7841 • Fax: 800.241.7664 • Email: sales@daman.com • www.daman.com

D02 Parallel Circuit Manifold

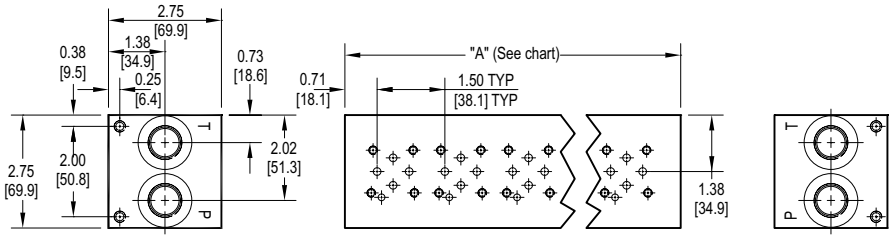

Parallel Circuit

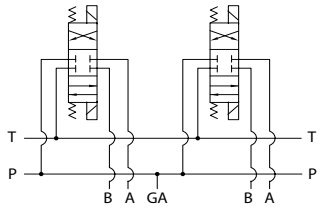

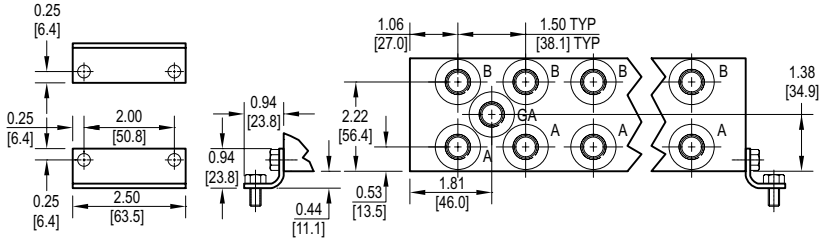

Flow Curve

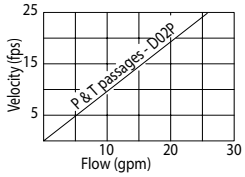

Rated flow 14 gpm @ 15 fps

All mounting hardware is supplied.
See page 64 for itemized list.

Port code	Valve mtg.	Manifold mtg.
P, S	#10-24 UNC x 0.56 [14] DP	0.25-20 UNC x 0.38 [9.7] DP
B, M, T	M5 ISO 6H x 0.56 [14] DP	M6 ISO 6H x 0.38 [9.7] DP

No. of stations	* 01	02	03	04	05	06	07	08	09	10
"A" length inch [mm]	2.13 [54.0]	3.63 [92.1]	5.13 [130.2]	6.63 [168.3]	8.13 [206.4]	9.63 [244.5]	11.13 [282.6]	12.63 [320.7]	14.13 [358.8]	15.63 [396.9]
apx. weight alum lb [kg]	3 [1.5]	5 [2.5]	7 [3]	8 [4]	10 [4.5]	12 [5.5]	14 [6]	16 [7]	17 [8]	19 [9]
apx. weight ferrous lb [kg]	5 [2.5]	8.5 [4]	12 [5.5]	16 [7]	19 [9]	23 [10]	26 [12]	30 [14]	33 [15]	37 [17]

* Length of 01 station with relief cavity is 3.13 [79.4]. Gauge port not available on 01 station.

Specifications, descriptions, and dimensional data are subject to correction or change without notice or incurring obligation. Download latest catalog page revisions at www.daman.com.

Ordering Information

For **coating options** see pages 245-246.

Material	Valve Pattern	Circuit	No. of Stations	Valve Spacing	Port Threads	/	Options

Material

A	Aluminum - 6061-T6 3000† psi • 20.7 MPa
D	Ductile Iron - D4512 5000† psi • 34.5 MPa

† Working pressure should be considered in accordance with ISO 4413 to determine appropriate material type.

Circuit

P	Parallel Circuit

Valve Spacing

1	1.50 inch 38.1 mm

Options

See next page for available options and ordering codes.

Valve Pattern

D02	ISO 4401-02-01 NFPA T3.5.1-D02 See Tech Information

No. of Stations

Aluminum	
01...10	Available with spacing code 1
Ductile Iron	
01...10	Available with spacing code 1

Port Threads

		P & T	A & B	GA
P	NPTF • ANSI B1.20.3	0.50	0.38	0.25
S	SAE • ISO 11926	-8	-6	-6
B	BSPP • ISO 1179	0.50	0.38	none
M	ISO • ISO 6149	M18	M14	none
T	BSPT • ISO 7	0.50	0.38	none

Daman Products Company, Inc. • 1811 North Home Street • Mishawaka, IN 46545-7267
Tel: 800.959.7841 574.259.7841 • Fax: 800.241.7664 • Email: sales@daman.com • www.daman.com

Options - D02 Parallel Manifold

Contact Daman for cavity locations if critical.

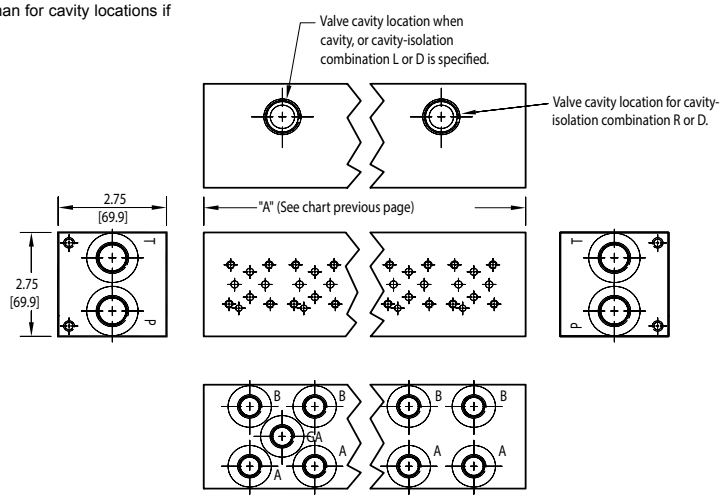

ISOLATIONS

Daman isolation options allow a manifold to have two independent pressure and/or tank ports. Isolations are drilled rather than plugged to ensure a leakproof and failproof isolation.

Ordering code letter:	* Isolation is between stations:	Available # of stations:
A	01 & 02	02-10
B	02 & 03	03-10
C	03 & 04	04-10
D	04 & 05	05-10
E	05 & 06	06-10
F	06 & 07	07-10
G	07 & 08	08-10
H	08 & 09	09-10
J	09 & 10	10

* Stations are numbered left to right.

Parallel Circuit with Cavity

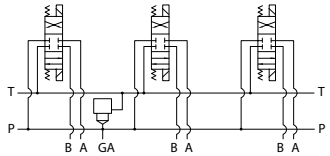

Valves with P in the nose and T out the side must be used.

Parallel Circuit with Isolations

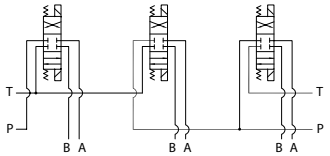

Manifold shown with P isolation between 1 & 2 (PA), and T isolation between 2 & 3 (TB).

Cavity & Isolation Combinations

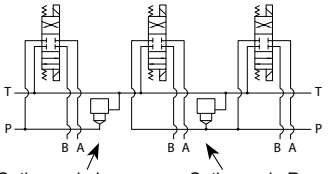

Option code L
Cavity left of isolation

Option code R
Cavity right of isolation

Option code D includes both cavities

NOTES:

1) The GA port is not available on a (1) station manifold.

2) The GA port is not available when a pressure isolation is located between stations 1 & 2.

3) Some cavity and isolation combinations are not possible. Consult factory to determine availablity.

Ordering Information

... /	Cavity	Pressure Isolation	Tank Isolation	Cavity & Isolation Combinations

Cavity

Omit if cavity not required.

C	Common cavity: With solenoid clearance. C-10-2 (P in nose) For valves w/1" hex max.
S	Sun Cavity T-162A (P in nose) See Tech Info for valves.

Pressure Isolation

Omit if P isolation not required

PA...PJ	Available with spacing code 1

Tank Isolation

Omit if T isolation not required

TA...TJ	Available with spacing code 1

Cavity & Isolation Combinations

Specify when using a combination of cavity and isolation options. Cavities do have solenoid clearance.

L	Cavity is located left of the isolation.
R	Cavity is located right of the isolation.
D	Two cavities, one each side of isolation.

Daman Products Company, Inc. • 1811 North Home Street • Mishawaka, IN 46545-7267
Tel: 800.959.7841 574.259.7841 • Fax: 800.241.7664 • Email: sales@daman.com • www.daman.com

D02 Series Circuit Manifold

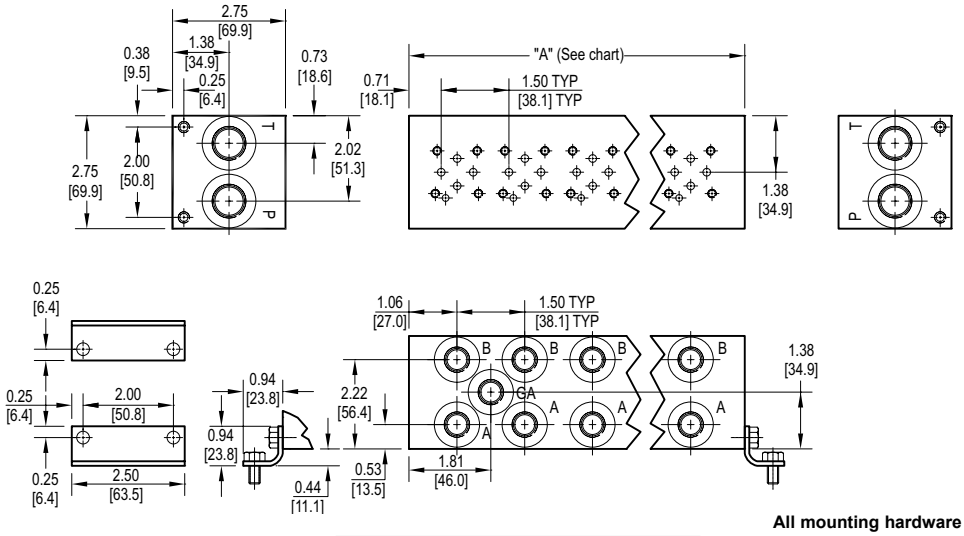

Series Circuit

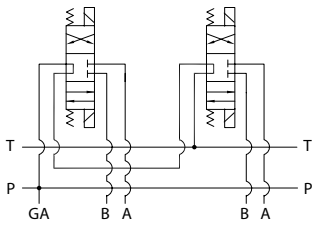

No. of stations	02	03	04
"A" length inch [mm]	3.63 [92.1]	5.13 [130.2]	6.63 [168.3]
apx. weight alum lb [kg]	5 [2.5]	7 [3]	8 [4]
apx. weight ferrous lb [kg]	8.5 [4]	12 [6]	16 [7]

All mounting hardware is supplied.
See page 64 for itemized list.

Port code	Valve mtg.	Manifold mtg.
P, S	#10-24 UNC x 0.56 [14] DP	0.25-20 UNC x 0.38 [9.7] DP
B, M, T	M5 ISO 6H x 0.56 [14] DP	M6 ISO 6H x 0.38 [9.7] DP

Note: Both Daman's parallel and series D02 manifolds have pressure and tank lines that run the length of the manifold. Consequently it is commonly assumed that an error was made by marking a parallel manifold incorrectly as a series. Upon closer inspection it can be seen that the valve patterns are indeed connected in series.

Specifications, descriptions, and dimensional data are subject to correction or change without notice or incurring obligation. Download latest catalog page revisions at www.daman.com.

Ordering Information

For **coating options** see pages 245-246.

Material	Valve Pattern	Circuit	No. of Stations	Valve Spacing	Port Threads	/	Options

Material

A	Aluminum - 6061-T6 3000† psi • 20.7 MPa
D	Ductile Iron - D4512 5000† psi • 34.5 MPa

† Working pressure should be considered in accordance with ISO 4413 to determine appropriate material type.

Circuit

S	Series Circuit

Valve Spacing

1	1.50 inch 38.1 mm

Options

See next page for available options and ordering codes.

Valve Pattern

D02	ISO 4401-02-01 NFPA T3.5.1-D02 See Tech Information

No. of Stations

Aluminum	
02...04	Available with spacing code 1
Ductile Iron	
02...04	Available with spacing code 1

Port Threads

		P & T	A & B	GA
P	NPTF • ANSI B1.20.3	0.50	0.38	0.25
S	SAE • ISO 11926	-8	-6	-6
B	BSPP • ISO 1179	0.50	0.38	none
M	ISO • ISO 6149	M18	M14	none
T	BSPT • ISO 7	0.50	0.38	none

Daman Products Company, Inc. • 1811 North Home Street • Mishawaka, IN 46545-7267
Tel: 800.959.7841 574.259.7841 • Fax: 800.241.7664 • Email: sales@daman.com • www.daman.com

Options - D02 Series Manifold

Contact Daman for cavity locations if critical.

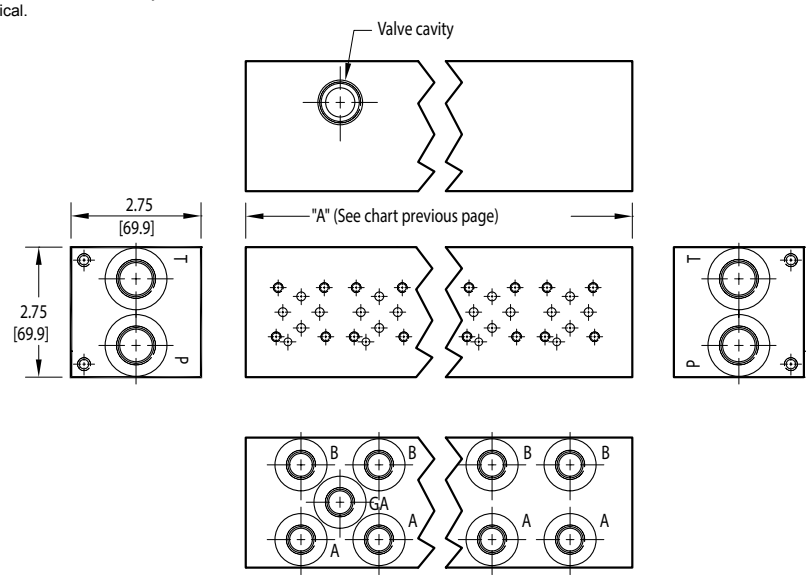

Series Circuit with Cavity

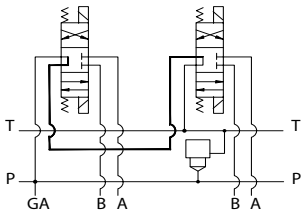

Valve with P in nose must be used.

Ordering Information

... /	Cavity

Cavity	
Omit if cavity not required.	
C	Common cavity: With solenoid clearance. C-10-2 (P in nose) For valves w/1" hex max.
S	Sun Cavity T-162A (P in nose) See Tech Info for valves.

Daman Products Company, Inc. • 1811 North Home Street • Mishawaka, IN 46545-7267
Tel: 800.959.7841 574.259.7841 • Fax: 800.241.7664 • Email: sales@daman.com • www.daman.com

D03 Standard Flow Parallel Circuit Manifold

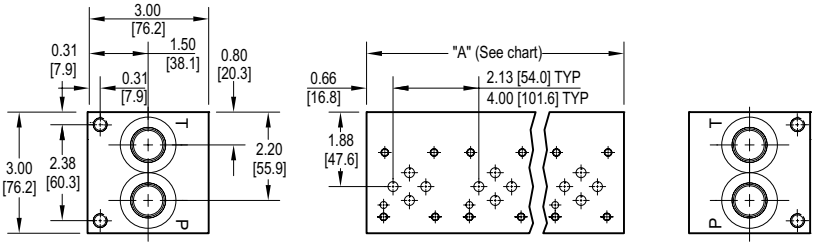

Parallel Circuit

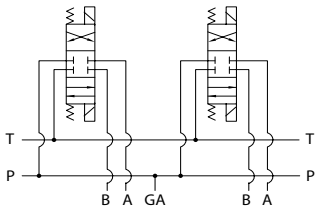

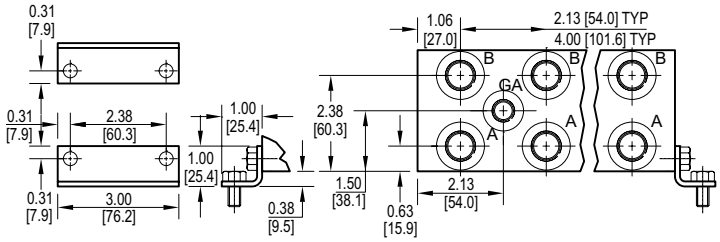

Flow Curve

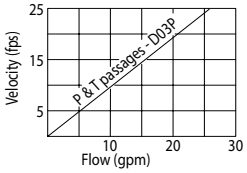

Rated flow 14 gpm @ 15 fps

All mounting hardware is supplied, except for stainless. See page 64 for itemized list.

No. of stations	* 01	02	03	04	05	06	07	08	09	10	11	12	13	14	15	16	17	18	19	20
"A" length (code 2 spa.) inch [mm]	2.13 [54.0]	4.25 [108.0]	6.38 [162.1]	8.50 [215.9]	10.63 [270.0]	12.75 [323.9]	14.88 [378.0]	17.00 [431.8]	19.13 [485.9]	21.25 [539.8]	23.38 [593.9]	25.50 [647.7]	27.63 [701.8]	29.75 [755.7]	31.88 [809.8]	34.00 [853.6]	36.13 [917.6]	38.25 [971.6]	40.38 [1025.5]	42.50 [1079.5]
apx. weight alum lb [kg]	3 [1]	4 [2]	6 [3]	8 [4]	9 [4]	11 [5]	12 [5]	14 [6]	16 [7]	18 [8]	20 [9]	21 [10]	22 [10]	24 [11]	26 [12]	27 [12]	29 [13]	31 [14]	32 [15]	34 [15]
apx. weight ferrous lb [kg]	5 [2]	9 [4]	13 [6]	17 [8]	21 [10]	26 [12]	30 [14]	34 [15]	38 [17]	42 [19]	47 [21]	51 [23]	55 [25]	59 [27]	63 [29]	68 [31]	--	--	--	--
"A" length (code 4 spa.) inch [mm]	--	6.13 [155.7]	10.13 [257.3]	14.13 [358.9]	18.13 [460.5]	22.13 [562.1]	26.13 [663.7]	30.13 [765.3]	34.13 [866.9]	38.13 [968.5]	42.13 [1070.1]	46.13 [1171.7]	50.13 [1273.3]	54.13 [1374.9]	58.13 [1476.5]	62.13 [1578.1]				
apx. weight alum lb [kg]	--	6 [3]	9 [4]	12 [5]	15 [7]	19 [9]	22 [10]	25 [11]	29 [13]	32 [15]	36 [16]	39 [18]	42 [19]	46 [21]	49 [22]	53 [24]				
apx. weight ferrous lb [kg]	--	12 [5]	20 [9]	28 [13]	36 [16]	45 [20]	53 [24]	61 [28]	69 [31]	77 [35]	85 [39]	93 [42]	102 [46]	110 [50]	118 [54]	126 [57]				

Specifications, descriptions, and dimensional data are subject to correction or change without notice or incurring obligation. Download latest catalog page revisions at www.daman.com.

* Length of 01 station with relief cavity is 3.00 [76.2]. Gauge port not available on 01 station.

Port code	Valve mtg.	Manifold mtg.
P, S	#10-24 UNC x 0.63 [16] DP	0.31-18 UNC x 0.44 [11.1] DP
B, M, T	M5 ISO 6H x 0.63 [16] DP	M8 ISO 6H x 0.44 [11.1] DP

Ordering Information

For **coating options** see pages 245-246.

Material	Valve Pattern	Circuit	No. of Stations	Valve Spacing	Port Threads	/	Options

Material

A	Aluminum - 6061-T6 3000† psi • 20.7 MPa
D	Ductile Iron - D4512 5000† psi • 34.5 MPa
S*	Stainless Steel - 17-4 5000† psi • 34.5 MPa

† Working pressure should be considered in accordance with ISO 4413 to determine appropriate material type.

*All stainless steel products are passivated.

Valve Pattern

D03	ISO 4401-03-02 NFPA T3.5.1-D03 See Tech Information

Circuit

P	Parallel Circuit Standard Flow

No. of Stations

Aluminum	
01...20	Available with spacing code 2
02...16	Available with spacing code 4
Ductile Iron	
01...16	Available with spacing code 2
02...16	Available with spacing code 4
Stainless Steel	
01...09	Available with spacing code 2
02...05	Available with spacing code 4

Valve Spacing

2	2.13 inch 54.0 mm
4	4.00 inch 101.6 mm

Port Threads

		P & T	A & B	GA
P*	NPTF • ANSI B1.20.3	0.50	0.38	0.25
S	SAE • ISO 11926	-10	-8	-6
B	BSPP • ISO 1179	0.50	0.38	none
M	ISO • ISO 6149	M22	M18	none
T*	BSPT • ISO 7	0.50	0.38	none

* Pipe ports in stainless can experience galling

Options

See next page for available options and ordering codes.

Daman Products Company, Inc. • 1811 North Home Street • Mishawaka, IN 46545-7267
Tel: 800.959.7841 574.259.7841 • Fax: 800.241.7664 • Email: sales@daman.com • www.daman.com

Options - D03 Standard Flow Parallel Manifold

Contact Daman for cavity locations if critical.

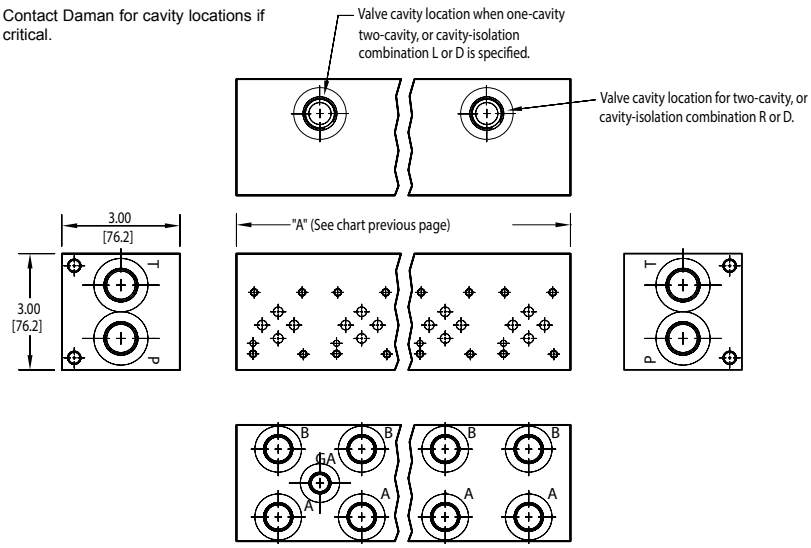

ISOLATIONS

Daman isolation options allow a manifold to have two independent pressure and/or tank ports. Isolations are drilled rather than plugged to ensure a leakproof and failproof isolation.

Ordering code letter:	* Isolation is between stations:	Available # of stations:
2.125 [54.0] spacing		
A	01 & 02	02-14
B	02 & 03	03-15
C	03 & 04	04-16
D	04 & 05	05-17
E	05 & 06	06-18
F	06 & 07	07-19
G	07 & 08	08-20
H	08 & 09	09-20
J	09 & 10	10-20
4.00 [101.6] spacing		
A	01 & 02	02-10
B	02 & 03	03-11
C	03 & 04	04-12
D	04 & 05	05-13
E	05 & 06	06-14
F	06 & 07	07-15
G	07 & 08	08-16

* Stations are numbered left to right.

Parallel Circuit with one or two Cavities

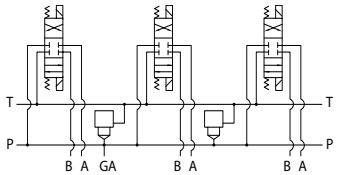

Valves with P in the nose and T out the side must be used.

Parallel Circuit with Isolations

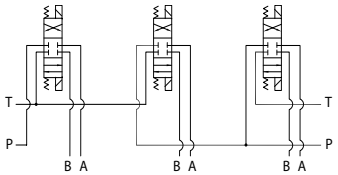

Manifold shown with P isolation between 1 & 2 (PA), and T isolation between 2 & 3 (TB).

Cavity & Isolation Combinations

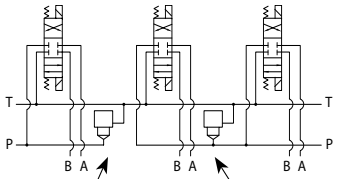

Option code L
Cavity left of isolation

Option code R
Cavity right of isolation

Option code D includes both cavities

NOTES:

1) The GA port is not available on a (1) station manifold.

2) The GA port is not available when a pressure isolation is located between stations 1 & 2.

3) Some cavity and isolation combinations are not possible with spacing code 2. Consult factory to determine availablity.

Ordering Information

... /	Cavity	Pressure Isolation	Tank Isolation	Cavity & Isolation Combinations

Cavity

Omit if cavities not required	
C	One Common cavity: No solenoid clearance. C-10-2 (P in nose) For valves w/1" hex max.
CC	Two Common cavities: With solenoid clearance C-10-2 (P in nose) Available 03-20 stations with spacing code 2; Available 02-16 stations with spacing code 4. Not available in combination with isolation options.
S	One Sun Cavity: T-10A (P in nose) See Tech Info for valves.

Pressure Isolation

Omit if P isolation not required	
PA...PJ	Available with spacing code 2
PA...PG	Available with spacing code 4

Tank Isolation

Omit if T isolation not required	
TA...TJ	Available with spacing code 2
TA...TG	Available with spacing code 4

Cavity & Isolation Combinations

Specify when using a combination of cavity and isolation options. Cavities do not have solenoid clearance.

L	Cavity is located left of the isolation.
R	Cavity is located right of the isolation.
D	Two cavities, one each side of isolation. (Use with cavity option codes C or S only.)

Daman Products Company, Inc. • 1811 North Home Street • Mishawaka, IN 46545-7267
Tel: 800.959.7841 574.259.7841 • Fax: 800.241.7664 • Email: sales@daman.com • www.daman.com

D03 Standard Flow Bottom Ported Manifold

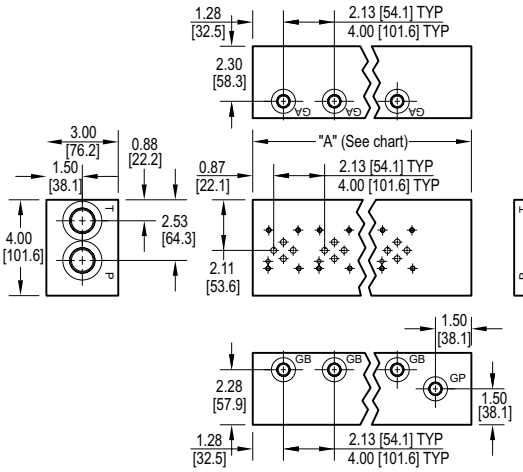

Mounting hardware is NOT supplied.

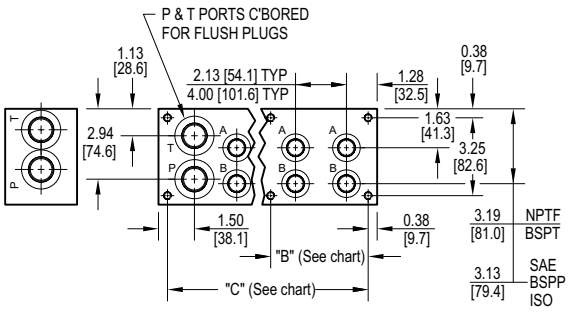

Parallel Circuit

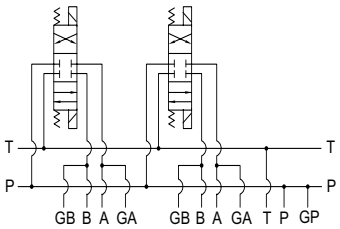

Flow Curve

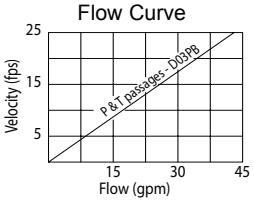

Rated flow 25 gpm @ 15 fps

Port code	Valve mtg.	Manifold mtg.
P, S	#10-24 UNC x 0.63 [16] DP	0.38-16 UNC x 0.69 [17.5] DP
B, M, T	M5 ISO 6H x 0.63 [16] DP	M10 ISO 6H x 0.69 [17.5] DP

No. of stations	01	02	03	04	05	06	07	08	09	10	11	12
"A" length (code 2 spa.) inch [mm]	4.38 [111.1]	6.50 [165.1]	8.63 [219.1]	10.75 [273.1]	12.88 [327.0]	15.00 [381.0]	17.13 [435.0]	19.25 [489.0]	21.38 [542.9]	23.50 [596.9]	25.63 [650.9]	27.75 [704.9]
"B" dim (code 2 spa.) inch [mm]	--	--	--	--	--	--	--	8.34 [211.9]	8.34 [211.9]	10.47 [265.9]	10.47 [265.9]	12.59 [319.9]
"C" dim (code 2 spa.) inch [mm]	3.63 [92.1]	5.75 [146.1]	7.88 [200.0]	10.00 [254.0]	12.13 [308.0]	14.25 [362.0]	16.38 [415.9]	18.50 [469.9]	20.63 [523.9]	22.75 [577.9]	24.88 [631.8]	27.00 [685.8]
apx. weight alum lb [kg]	5 [2]	8 [4]	10 [5]	13 [6]	15 [7]	18 [8]	21 [9]	23 [10]	26 [12]	28 [13]	31 [14]	33 [15]
apx. weight ferrous lb [kg]	14 [6]	20 [9]	27 [12]	34 [15]	40 [18]	47 [21]	53 [24]	60 [27]	67 [30]	73 [33]	80 [36]	87 [39]

No. of stations	02	03	04	05	06
"A" length (code 4 spa.) inch [mm]	8.38 [212.7]	12.38 [314.3]	16.38 [415.9]	20.38 [517.5]	24.38 [619.1]
"B" dim (code 4 spa.) inch [mm]	--	--	--	10.91 [277.0]	10.91 [277.0]
"C" dim (code 4 spa.) inch [mm]	7.63 [193.7]	11.63 [295.3]	15.63 [396.9]	19.63 [498.5]	23.38 [600.1]
apx. weight alum lb [kg]	10 [5]	15 [7]	20 [9]	24 [11]	29 [13]
apx. weight ferrous lb [kg]	26 [12]	39 [18]	51 [23]	64 [29]	76 [34]

Specifications, descriptions, and dimensional data are subject to correction or change without notice or incurring obligation. Download latest catalog page revisions at www.daman.com.

Ordering Information

Material	Valve Pattern	Circuit	No. of Stations	Valve Spacing	Port Threads

For **coating options** see pages 245-246.

Material

A	Aluminum - 6061-T6 3000† psi • 20.7 MPa
D	Ductile Iron - D4512 5000† psi • 34.5 MPa

† Working pressure should be considered in accordance with ISO 4413 to determine appropriate material type.

Circuit

PB	Parallel Circuit Standard Flow Bottom Ported

Valve Spacing

2	2.13 inch 54.0 mm
4	4.00 inch 101.6 mm

Valve Pattern

D03	ISO 4401-03-02 NFPA T3.5.1-D03 See Tech Information

No. of Stations

Aluminum	
01...12	Available with spacing code 2
02...06	Available with spacing code 4
Ductile Iron	
01...12	Available with spacing code 2
02...06	Available with spacing code 4

Port Threads

		P & T	A & B	G*
P	NPTF • ANSI B1.20.3	0.75	0.50	0.25
S	SAE • ISO 11926	-12	-8	-4
B	BSPP • ISO 1179	0.75	0.50	0.25
M	ISO • ISO 6149	M27	M18	M10
T	BSPT • ISO 7	0.75	0.50	0.25

Daman Products Company, Inc. • 1811 North Home Street • Mishawaka, IN 46545-7267
Tel: 800.959.7841 574.259.7841 • Fax: 800.241.7664 • Email: sales@daman.com • www.daman.com

Daman®

D03 Tank Line Feed Circuit Manifold

D03 Directional Valves
2F06 Flow Control Valve
Valve mtg: D03: UNC #10-24 x 0.63 DP
2F06: UNC 0.31-18 x 0.63 DP

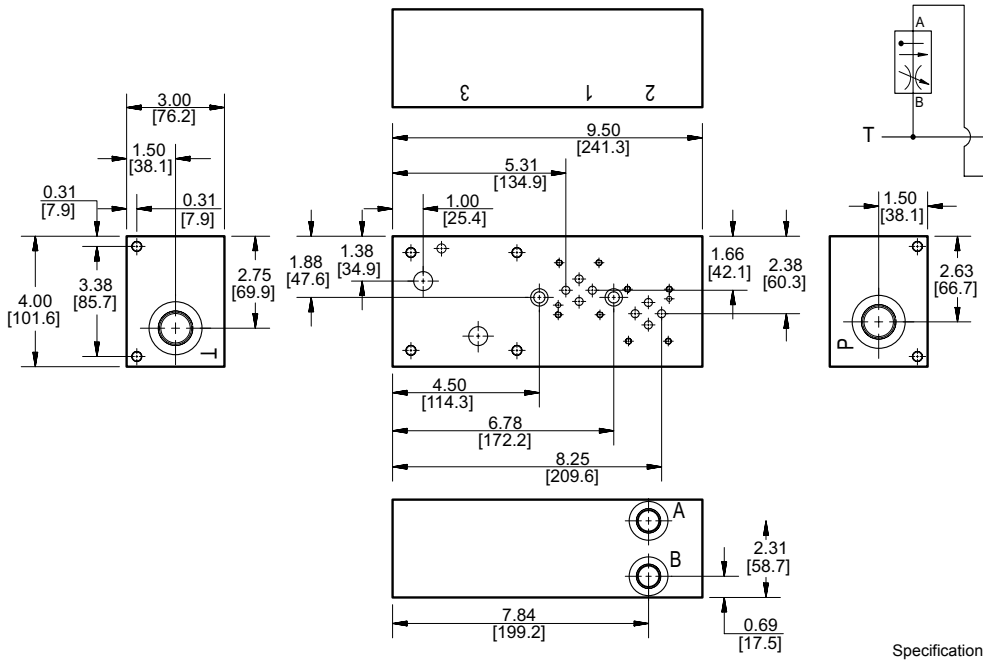

"Meter Out" Tank Feed Circuit

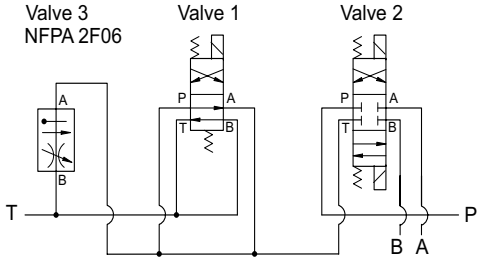

Manifold Mounting:

Manifold bracket mounting kit is supplied. See page 64 for itemized mounting kit list.

Two SHCS clearance holes are provided for optional 5/16 (M8) SHCS mounting. Screws are user provided; miminum 3.00 in [75mm] long GR8 SHCS should be used.

Specifications, descriptions, and dimensional data are subject to correction or change without notice or incurring obligation. Download latest catalog page revisions at www.daman.com.

Ordering Information

Material	Valve Pattern	Circuit	Port Threads

For **coating options** see pages 245-246.

Material	
A	Aluminum - 6061-T6 3000† psi • 20.7 MPa
D	Ductile Iron - D4512 5000† psi • 34.5 MPa

† Working pressure should be considered in accordance with ISO 4413 to determine appropriate material type.

Circuit	
TF	Tank Line Feed Circuit

Valve Pattern	
D03	ISO 4401-03-02 NFPA T3.5.1-D03 See Tech Information

Flow Control Pattern (REF):
2F06 Pattern
ISO 6263-06-05
NFPA T3.5.1-2F06

Port Threads		P & T	A & B
P	NPTF • ANSI B1.20.3	0.75	0.38
S	SAE • ISO 11926	-12	-8

Daman Products Company, Inc. • 1811 North Home Street • Mishawaka, IN 46545-7267
Tel: 800.959.7841 574.259.7841 • Fax: 800.241.7664 • Email: sales@daman.com • www.daman.com

Daman®

D03 High Flow Parallel Circuit Manifold

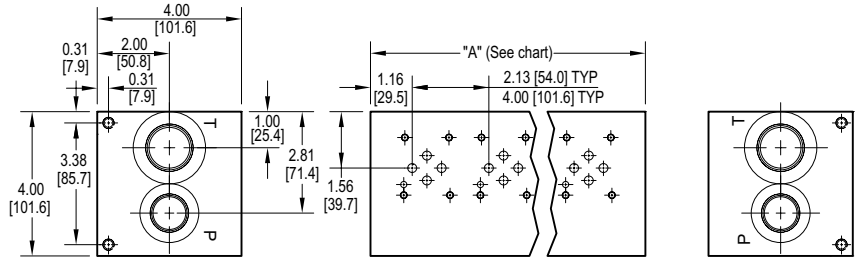

Parallel Circuit

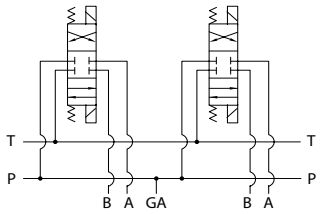

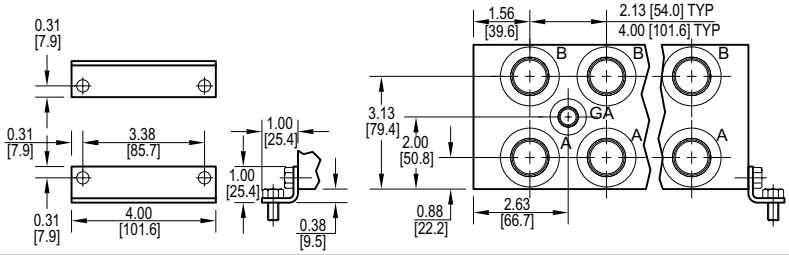

Flow Curve

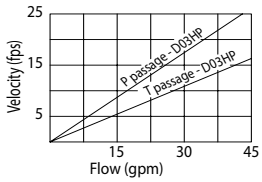

Rated flow Pressure 25 gpm @ 15 fps
Rated flow Tank 41 gpm @ 15 fps

No. of stations	* 01	02	03	04	05	06	07	08	09	10	11	12	13	14	15	16	17	18
"A" length (code 2 spa.) inch [mm]	3.13 [79.5]	5.25 [133.4]	7.38 [187.5]	9.50 [241.3]	11.63 [295.4]	13.75 [349.3]	15.88 [403.4]	18.00 [457.2]	20.13 [511.3]	22.25 [565.2]	24.38 [619.1]	26.50 [673.1]	28.63 [727.1]	30.75 [781.1]	32.88 [835.0]	35.00 [889.0]	37.13 [943.1]	39.25 [997.0]
apx. weight alum lb [kg]	5 [2]	8 [4]	12 [5]	15 [7]	18 [8]	22 [10]	25 [11]	28 [13]	32 [15]	35 [16]	39 [18]	42 [19]	46 [21]	49 [22]	52 [24]	56 [25]	59 [27]	63 [29]
apx. weight ferrous lb [kg]	13 [6]	22 [10]	30 [14]	39 [18]	48 [22]	57 [26]	66 [30]	74 [34]	83 [38]	92 [42]	101 [46]	110 [50]	119 [54]	128 [58]	137 [62]	146 [66]	--	--
"A" length (code 4 spa.) inch [mm]	--	7.13 [181.1]	11.13 [282.7]	15.13 [384.5]	19.13 [485.9]	23.13 [587.5]	27.13 [689.1]	31.13 [790.7]	35.13 [892.3]	39.13 [993.9]	43.13 [1095.5]							
apx. weight alum lb [kg]	--	11 [5]	17 [8]	24 [11]	30 [14]	37 [17]	43 [20]	49 [22]	56 [25]	62 [28]	68 [31]							
apx. weight ferrous lb [kg]	--	29 [13]	46 [21]	62 [28]	79 [36]	96 [44]	112 [51]	129 [59]	146 [67]	162 [74]	--							

All mounting hardware is supplied. See page 64 for itemized list.

Specifications, descriptions, and dimensional data are subject to correction or change without notice or incurring obligation. Download latest catalog page revisions at www.daman.com.

* Length of 01 station with relief cavity is 4.00 [101.6]. Gauge port not available on 01 station.

Port code	Valve mtg.	Manifold mtg.
P, S	#10-24 UNC x 0.63 [16] DP	0.31-18 UNC x 0.44 [11.1] DP
B, M, T	M5 ISO 6H x 0.63 [16] DP	M8 ISO 6H x 0.44 [11.1] DP

Ordering Information

For **coating options** see pages 245-246.

Material	Valve Pattern	Circuit	No. of Stations	Valve Spacing	Port Threads	/	Options

Material

A	Aluminum - 6061-T6 3000† psi • 20.7 MPa
D	Ductile Iron - D4512 5000† psi • 34.5 MPa

† Working pressure should be considered in accordance with ISO 4413 to determine appropriate material type.

Circuit

HP	Parallel Circuit High Flow

Valve Spacing

2	2.13 inch 54.0 mm
4	4.00 inch 101.6 mm

Options

See next page for available options and ordering codes.

Valve Pattern

D03	ISO 4401-03-02 NFPA T3.5.1-D03 See Tech information

No. of Stations

Aluminum	
01...18	Available with spacing code 2
02...11	Available with spacing code 4
Ductile Iron	
01...16	Available with spacing code 2
02...10	Available with spacing code 4

Port Threads

		P,A,B	T	GA
P	NPTF • ANSI B1.20.3	0.75	1.00	0.25
S	SAE • ISO 11926	-12	-16	-6
B	BSPP • ISO 1179	0.75	1.00	none
M	ISO • ISO 6149	M27	M33	none
T	BSPT • ISO 7	0.75	1.00	none

Daman Products Company, Inc. • 1811 North Home Street • Mishawaka, IN 46545-7267
Tel: 800.959.7841 574.259.7841 • Fax: 800.241.7664 • Email: sales@daman.com • www.daman.com

Options - D03 High Flow Parallel Manifold

Contact Daman for cavity locations if critical.

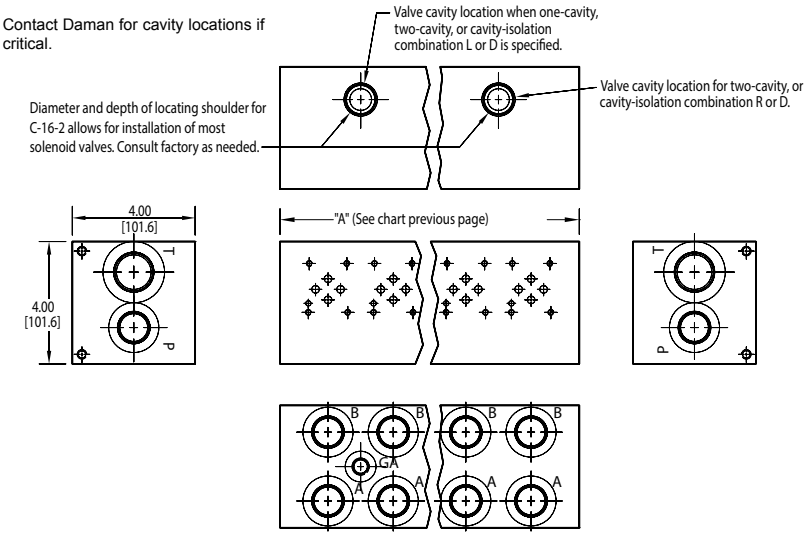

ISOLATIONS

Daman isolation options allow a manifold to have two independent pressure and/or tank ports. Isolations are drilled rather than plugged to ensure a leakproof and failproof isolation.

Ordering code letter:	* Isolation is between stations:	Available # of stations:
2.125 [54.0] spacing		
A	01 & 02	02-14
B	02 & 03	03-15
C	03 & 04	04-16
D	04 & 05	05-17
E	05 & 06	06-18
F	06 & 07	07-18
G	07 & 08	08-18
H	08 & 09	09-18
J	09 & 10	10-18
4.00 [101.6] spacing		
A	01 & 02	02-10
B	02 & 03	03-11
C	03 & 04	04-11
D	04 & 05	05-11
E	05 & 06	06-11
F	06 & 07	07-11
G	07 & 08	08-11

* Stations are numbered left to right.

Parallel Circuit with one or two Cavities

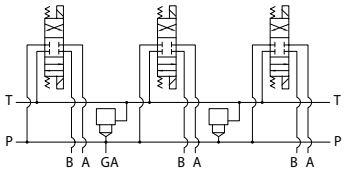

Valves with P in the nose and T out the side must be used.

Parallel Circuit with Isolations

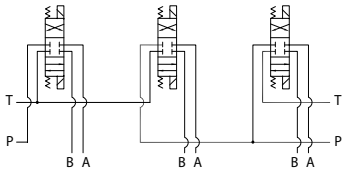

Manifold shown with P isolation between 1 & 2 (PA), and T isolation between 2 & 3 (TB).

Cavity & Isolation Combinations

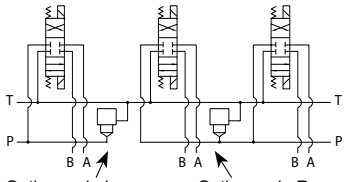

Option code L
Cavity left of isolation

Option code R
Cavity right of isolation

Option code D includes both cavities

NOTES:

1) The GA port is not available on a (1) station manifold.

2) The GA port is not available when a pressure isolation is located between stations 1 & 2.

3) Some cavity and isolation combinations are not possible with spacing code 2. Consult factory to determine availablity.

Ordering Information

... /	Cavity	Pressure Isolation	Tank Isolation	Cavity & Isolation Combinations

Cavity

Omit if cavities not required	
C	One Common cavity: C-16-2 (P in nose)
CC	Two Common cavities: C-16-2 (P in nose) Available 03-18 stations with spacing code 2; Available 02-11 stations with spacing code 4. Not available in combination with isolation options.
S	One Sun Cavity: T-3A (P in nose) See Tech Info for valves.

Pressure Isolation

Omit if P isolation not required	
PA...PJ	Available with spacing code 2
PA...PG	Available with spacing code 4

Tank Isolation

Omit if T isolation not required	
TA...TJ	Available with spacing code 2
TA...TG	Available with spacing code 4

Cavity & Isolation Combinations

Specify when using a combination of cavity and isolation options. Cavities do not have solenoid clearance.

L	Cavity is located left of the isolation.
R	Cavity is located right of the isolation.
D	Two cavities, one each side of isolation. (Use with cavity option codes C or S only.)

Daman Products Company, Inc. • 1811 North Home Street • Mishawaka, IN 46545-7267
Tel: 800.959.7841 574.259.7841 • Fax: 800.241.7664 • Email: sales@daman.com • www.daman.com

D03 High Flow Parallel Circuit Manifold - Flange Ports

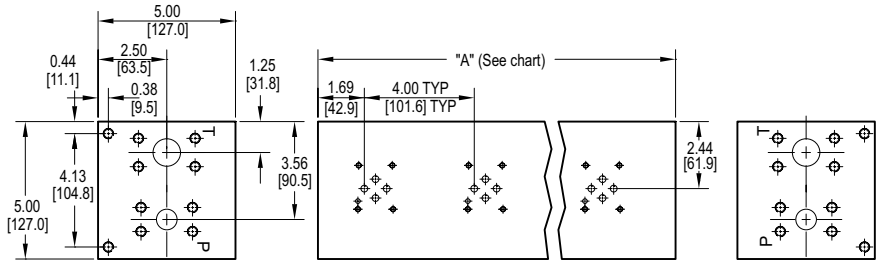

Parallel Circuit

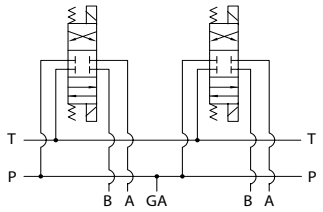

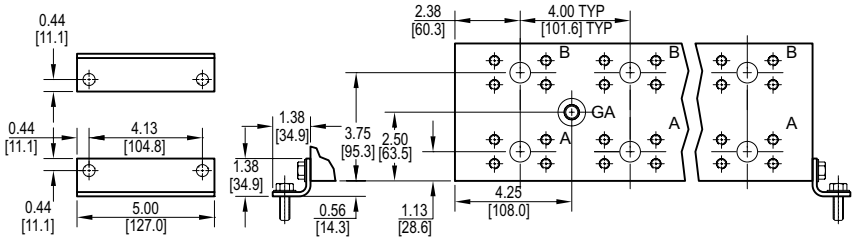

Flow Curve

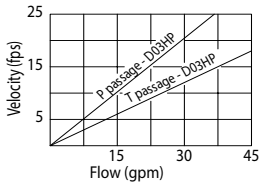

Rated flow Pressure 21 gpm @ 15 fps
Rated flow Tank 37 gpm @ 15 fps

No. of stations	* 01	02	03	04	05	06	07	08	09	10	11	12
"A" length inch [mm]	4.75 [120.7]	8.75 [222.3]	12.75 [323.9]	16.75 [425.5]	20.75 [527.1]	24.75 [628.7]	28.75 [730.3]	32.75 [831.9]	36.75 [933.5]	40.75 [1035.1]	44.75 [1136.7]	48.75 [1238.3]
apx. weight alum lb [kg]	12 [5.5]	22 [10]	32 [14.5]	42 [19]	52 [23.5]	62 [28]	72 [33]	82 [37]	92 [42]	102 [46]	112 [51]	122 [55]
apx. weight ferrous lb [kg]	31 [14]	57 [26]	83 [38]	109 [49]	135 [61]	161 [73]	187 [85]	213 [97]	239 [108]	265 [120]	291 [132]	317 [144]

* Length of 01 station with relief cavity is 5.75 [146.1]. Gauge port not available on 01 station.

Port code	Valve mtg.	Manifold mtg.	Flange mtg.	GA Port
F	#10-24 UNC x 0.63 [16] DP	0.38-16 UNC x 0.75 [19] DP	ISO 6162 Type II - Inch	**-6** SAE J1926
F / M	M5 ISO 6H x 0.63 [16] DP	M10 ISO 6H x 0.75 [19] DP	ISO 6162 Type I - metric	NONE

All mounting hardware is supplied.
See page 64 for itemized list.

Specifications, descriptions, and dimensional data are subject to correction or change without notice or incurring obligation.
Download latest catalog page revisions at www.daman.com.

Ordering Information

For **coating options** see pages 245-246.

Material	Valve Pattern	Circuit	No. of Stations	Valve Spacing	Port Threads	/	Options

Material

A	Aluminum - 6061-T6 3000† psi • 20.7 MPa
D	Ductile Iron - D4512 5000† psi • 34.5 MPa

† Working pressure should be considered in accordance with ISO 4413 to determine appropriate material type.

Circuit

HP	Parallel Circuit High Flow

Valve Spacing

4	4.00 inch 101.6 mm

Options

See next page for available options and ordering codes.

Valve Pattern

D03	ISO 4401-03-02 NFPA T3.5.1-D03 See Tech Information

No. of Stations

Aluminum or Ductile Iron	
01...12	Available with spacing code 4

Port Threads

		P,A,B	T
F	**CODE 61 4-Bolt Flange** SAE J518 - CODE 61 ISO 6162 - 2.5 to 35 MPa	0.75 CODE 61	1.00 CODE 61

Daman Products Company, Inc. • 1811 North Home Street • Mishawaka, IN 46545-7267
Tel: 800.959.7841 574.259.7841 • Fax: 800.241.7664 • Email: sales@daman.com • www.daman.com

Options - D03 High Flow Parallel Manifold Flange Ports

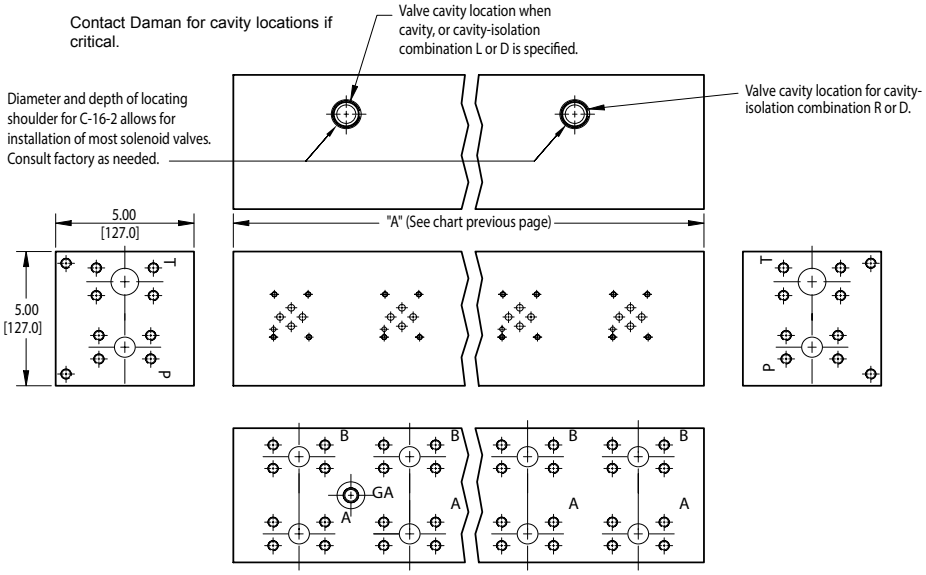

ISOLATIONS

Daman isolation options allow a manifold to have two independent pressure and/or tank ports. Isolations are drilled rather than plugged to ensure a leakproof and failproof isolation.

Ordering code letter:	* Isolation is between stations:	Available # of stations:
A	01 & 02	02-10
B	02 & 03	03-11
C	03 & 04	04-12
D	04 & 05	05-12
E	05 & 06	06-12
F	06 & 07	07-12
G	07 & 08	08-12

* Stations are numbered left to right.

NOTES:

1) The GA port is not available when a pressure isolation is located between stations 1 & 2.

2) Some cavity and isolation combinations are not possible. Consult factory to determine availablity.

Parallel Circuit with Cavity

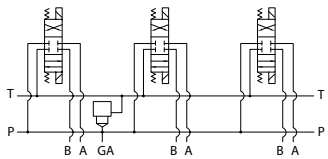

Valves with P in the nose and T out the side must be used.

Parallel Circuit with Isolations

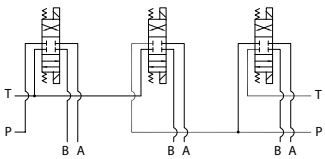

Manifold shown with P isolation between 1 & 2 (PA), and T isolation between 2 & 3 (TB).

Cavity & Isolation Combinations

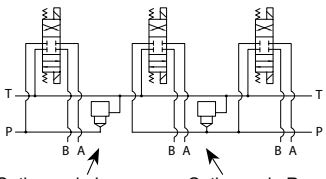

Option code L
Cavity left of isolation

Option code R
Cavity right of isolation

Option code D includes both cavities

Ordering Information

... /	Thread Type	Cavity	Pressure Isolation	Tank Isolation	Cavity & Isolation Combinations

Thread Type

Omit	Inch threads / ports
M	Metric threads / ports

Cavity

Omit if cavity not required

C	Common cavity: C-16-2 (P in nose)
S	Sun Cavity: T-3A (P in nose) See Tech Info for valves.

Pressure Isolation

Omit if P isolation not required

PA...PG	Available with spacing code 4

Tank Isolation

Omit if T isolation not required

TA...TG	Available with spacing code 4

Cavity & Isolation Combinations

Specify when using a combination of cavity and isolation options. Cavities do have solenoid clearance.

L	Relief cavity is located left of the isolation.
R	Relief cavity is located right of the isolation.
D	Two relief cavities, one each side of isolation.

Daman Products Company, Inc. • 1811 North Home Street • Mishawaka, IN 46545-7267
Tel: 800.959.7841 574.259.7841 • Fax: 800.241.7664 • Email: sales@daman.com • www.daman.com

D03 High Flow Bottom Ported Manifold

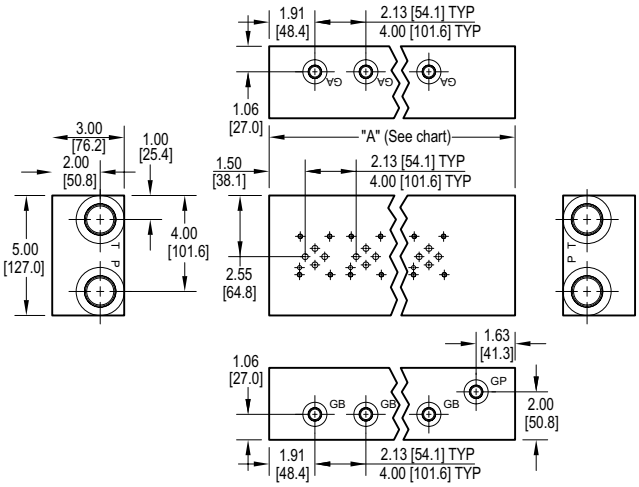

Mounting hardware is NOT supplied.

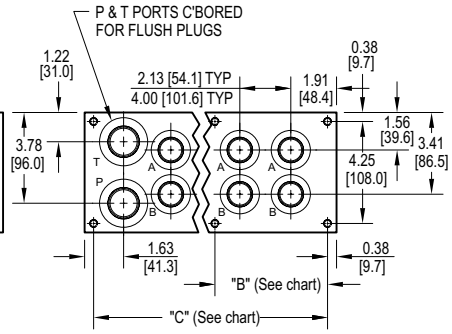

Parallel Circuit

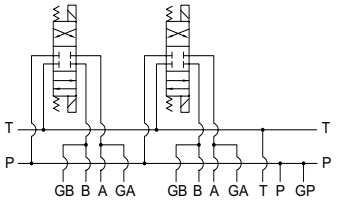

Flow Curve

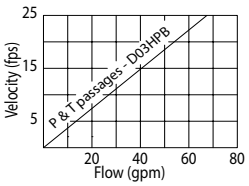

Rated flow 41 gpm @ 15 fps

Port code	Valve mtg.	Manifold mtg.
P, S	#10-24 UNC x 0.56 [14.3] DP	0.38-16 UNC x 1.00 [25.4] DP
B, M, T	M5 ISO 6H x 0.56 [14.3] DP	M10 ISO 6H x 1.00 [25.4] DP

No. of stations	01	02	03	04	05	06	07	08	09	10
"A" length (code 2 spa.) inch [mm]	5.50 [139.7]	7.63 [193.7]	9.75 [247.7]	11.88 [301.6]	14.00 [355.6]	16.13 [409.6]	18.25 [463.6]	20.38 [517.5]	22.50 [571.5]	24.63 [625.5]
"B" dim (code 2 spa.) inch [mm]	--	--	--	--	--	--	--	8.97 [227.8]	11.09 [281.8]	11.09 [281.8]
"C" dim (code 2 spa.) inch [mm]	4.75 [120.7]	6.88 [174.6]	9.00 [228.6]	11.13 [282.6]	13.25 [336.6]	15.38 [390.5]	17.50 [444.5]	19.63 [498.5]	21.75 [552.5]	23.88 [606.4]
apx. weight alum lb [kg]	8 [4]	11 [5]	15 [7]	18 [8]	21 [10]	24 [11]	27 [12]	31 [14]	34 [15]	37 [17]
apx. weight ferrous lb [kg]	21 [10]	30 [13]	38 [17]	46 [21]	55 [25]	63 [29]	71 [32]	79 [36]	88 [40]	96 [44]

No. of stations	02	03	04	05	06
"A" length (code 4 spa.) inch [mm]	9.50 [241.3]	13.50 [342.9]	17.50 [444.5]	21.50 [546.1]	25.50 [647.7]
"B" dim (code 4 spa.) inch [mm]	--	--	--	11.53 [292.9]	11.53 [292.9]
"C" dim (code 4 spa.) inch [mm]	8.75 [222.3]	12.75 [323.9]	16.75 [425.5]	20.75 [527.1]	24.75 [628.7]
apx. weight alum lb [kg]	14 [6]	20 [9]	26 [12]	32 [15]	38 [17]
apx. weight ferrous lb [kg]	37 [17]	53 [24]	68 [31]	84 [38]	99 [45]

Specifications, descriptions, and dimensional data are subject to correction or change without notice or incurring obligation. Download latest catalog page revisions at www.daman.com.

Ordering Information

Material	Valve Pattern	Circuit	No. of Stations	Valve Spacing	Port Threads

For **coating options** see pages 245-246.

Material

A	Aluminum - 6061-T6 3000† psi • 20.7 MPa
D	Ductile Iron - D4512 5000† psi • 34.5 MPa

† Working pressure should be considered in accordance with ISO 4413 to determine appropriate material type.

Circuit

HPB	Parallel Circuit High Flow Bottom Ported

Valve Spacing

2	2.13 inch 54.0 mm
4	4.00 inch 101.6 mm

Valve Pattern

D03	ISO 4401-03-02 NFPA T3.5.1-D03 See Tech Information

No. of Stations

Aluminum	
01...10	Available with spacing code 2
02...06	Available with spacing code 4
Ductile Iron	
01...10	Available with spacing code 2
02...06	Available with spacing code 4

Port Threads		P & T	A & B	G*
P	NPTF • ANSI B1.20.3	1.00	0.75	0.25
S	SAE • ISO 11926	-16	-12	-4
B	BSPP • ISO 1179	1.00	0.75	0.25
M	ISO • ISO 6149	M33	M27	M10
T	BSPT • ISO 7	1.00	0.75	0.25

Daman Products Company, Inc. • 1811 North Home Street • Mishawaka, IN 46545-7267
Tel: 800.959.7841 574.259.7841 • Fax: 800.241.7664 • Email: sales@daman.com • www.daman.com

D03 Series Circuit Manifolds ☞

Daman Products Company, Inc. • 1811 North Home Street • Mishawaka, IN 46545-7267
Tel: 800.959.7841 574.259.7841 • Fax: 800.241.7664 • Email: sales@daman.com • www.daman.com

D03 Series Circuit Manifold

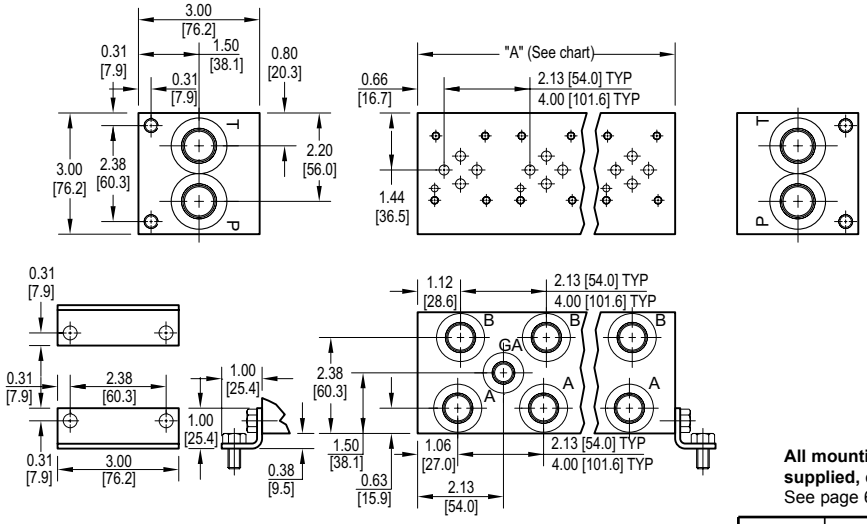

Series Circuit

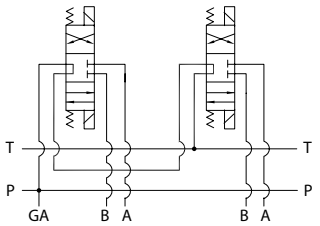

All mounting hardware is supplied, except for stainless.
See page 64 for itemized list.

Port code	Valve mtg.	Manifold mtg.
P, S	#10-24 UNC x 0.63 [16] DP	0.31-18 UNC x 0.44 [11.1] DP
B, M, T	M5 ISO 6H x 0.63 [16] DP	M8 ISO 6H x 0.44 [11.1] DP

No. of stations	02	03	04	05	06	07	08
"A" length (code 2 spa.) inch [mm]	4.25 [108.0]	6.38 [162.1]	8.50 [215.9]	10.63 [270.0]	12.75 [323.9]	14.88 [378.0]	17.00 [431.8]
apx. weight alum lb [kg]	4 [2]	6 [3]	8 [4]	9 [4]	11 [5]	12 [5]	14 [6]
apx. weight ferrous lb [kg]	9 [4]	13 [6]	17 [8]	23 [10]	26 [12]	--	--
"A" length (code 4 spa.) inch [mm]	6.13 [155.7]	10.13 [257.3]	14.13 [358.9]				
apx. weight alum lb [kg]	6 [3]	9 [4]	12 [5]				
apx. weight ferrous lb [kg]	12 [5]	20 [9]	28 [13]				

Note: Both Daman's parallel and series D03 manifolds have pressure and tank lines that run the length of the manifold. Consequently it is commonly assumed that an error was made by marking a parallel manifold incorrectly as a series. Upon closer inspection it can be seen that the valve patterns are indeed connected in series.

Specifications, descriptions, and dimensional data are subject to correction or change without notice or incurring obligation. Download latest catalog page revisions at www.daman.com.

Ordering Information

For **coating options** see pages 245-246.

Material	Valve Pattern	Circuit	No. of Stations	Valve Spacing	Port Threads	/	Options

Material

A	Aluminum - 6061-T6 3000† psi • 20.7 MPa
D	Ductile Iron - D4512 5000† psi • 34.5 MPa
S*	Stainless Steel - 17-4 5000† psi • 34.5 MPa

† Working pressure should be considered in accordance with ISO 4413 to determine appropriate material type.

*All stainless steel products are passivated.

Circuit

S	Series Circuit

Valve Pattern

D03	ISO 4401-03-02 NFPA T3.5.1-D03 See Tech Information

No. of Stations

Aluminum	
02...08	Available with spacing code 2
02...04	Available with spacing code 4
Ductile Iron	
02...06	Available with spacing code 2
02...04	Available with spacing code 4
Stainless Steel	
02...08	Available with spacing code 2
02...04	Available with spacing code 4

Valve Spacing

2	2.13 inch 38.1 mm
4	4.00 inch 101.6 mm

Port Threads

		P & T	A & B	GA
P*	NPTF • ANSI B1.20.3	0.50	0.38	0.25
S	SAE • ISO 11926	-10	-8	-6
B	BSPP • ISO 1179	0.50	0.38	none
M	ISO • ISO 6149	M22	M18	none
T*	BSPT • ISO 7	0.50	0.38	none

* Pipe ports in stainless can experience galling

Options

See next page for available options and ordering codes.

Daman Products Company, Inc. • 1811 North Home Street • Mishawaka, IN 46545-7267
Tel: 800.959.7841 574.259.7841 • Fax: 800.241.7664 • Email: sales@daman.com • www.daman.com

Options - D03 Series Manifold

Contact Daman for cavity locations if critical.

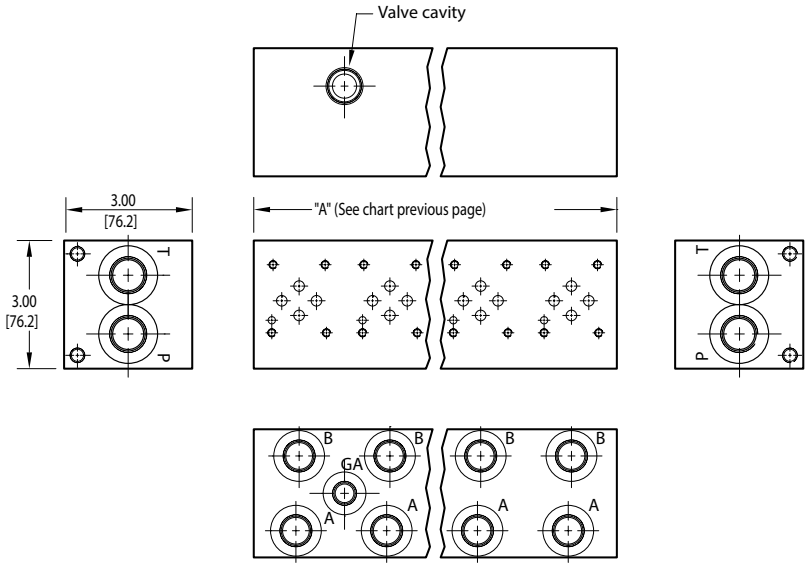

Series Circuit with Cavity

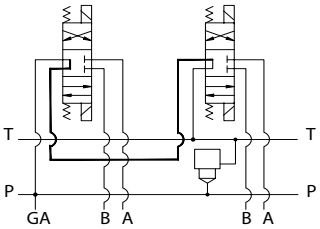

Valve with P in nose must be used.

Ordering Information

... /	Cavity

Cavity	
Omit if cavity not required.	
C	Common cavity: No solenoid clearance. C-10-2 (P in nose) For valves w/1" hex max.
S	Sun Cavity T-10A (P in nose) See Tech Info for valves.

Daman Products Company, Inc. • 1811 North Home Street • Mishawaka, IN 46545-7267
Tel: 800.959.7841 574.259.7841 • Fax: 800.241.7664 • Email: sales@daman.com • www.daman.com

D05 Standard Flow Parallel Manifold

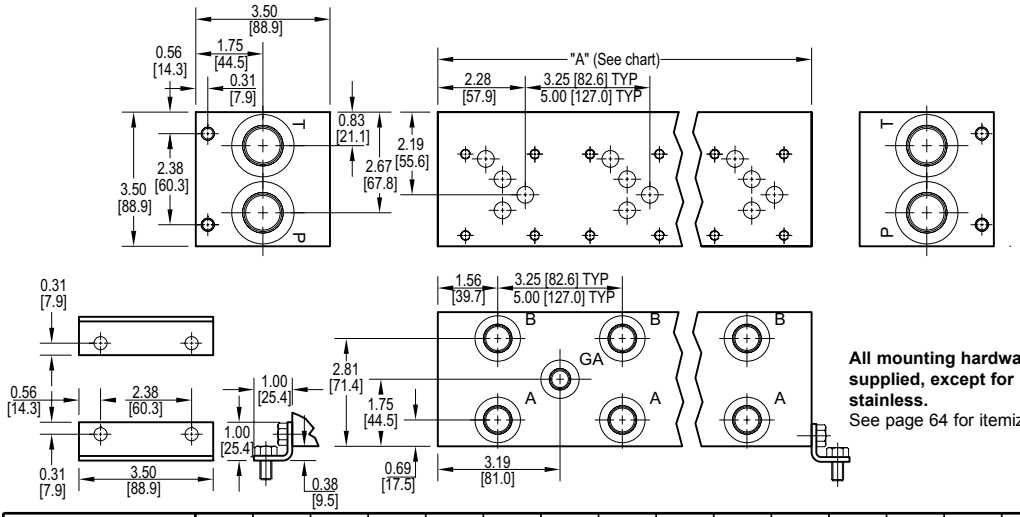

All mounting hardware is supplied, except for stainless.
See page 64 for itemized list.

Parallel Circuit

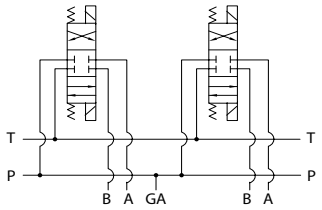

Flow Curve

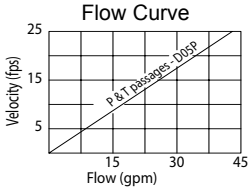

Rated flow 25 gpm @ 15 fps

No. of stations	* 01	02	03	04	05	06	07	08	09	10	11	12	13	14	15	16	17	18	19	20	21
"A" length (code 3 spa.) inch [mm]	3.25 [82.6]	6.50 [165.1]	9.75 [247.7]	13.00 [330.2]	16.25 [412.8]	19.50 [495.3]	22.75 [577.9]	26.00 [660.4]	29.25 [743.0]	32.50 [825.5]	35.75 [908.1]	39.00 [990.6]	42.25 [1073.2]	45.50 [1155.7]	48.75 [1238.3]	52.00 [1320.8]	55.25 [1403.4]	58.50 [1485.9]	61.75 [1568.5]	65.00 [1651.0]	68.25 [1733.6]
apx. weight alum lb [kg]	4 [2]	8 [4]	11 [5]	14 [7]	17 [8]	21 [10]	24 [11]	27 [12]	30 [14]	34 [15]	37 [17]	41 [19]	44 [20]	47 [21]	51 [23]	55 [25]	58 [26]	61 [28]	64 [29]	67 [30]	71 [32]
apx. weight ferrous lb [kg]	9 [4]	17 [8]	26 [12]	34 [15]	43 [20]	51 [23]	60 [27]	68 [31]	77 [35]	85 [39]	94 [43]	102 [46]	111 [50]	--	--	--	--	--	--	--	--
"A" length (code 5 spa.) inch [mm]	--	8.25 [209.6]	13.25 [336.6]	18.25 [463.6]	23.25 [590.6]	28.25 [717.6]	33.25 [844.6]	38.25 [971.6]	43.25 [1098.6]	48.25 [1225.6]	53.25 [1352.6]	58.25 [1479.6]	63.25 [1606.6]	68.25 [1733.6]							
apx. weight alum lb [kg]	--	9 [4]	15 [7]	20 [9]	25 [11]	30 [14]	35 [16]	41 [19]	46 [21]	50 [23]	55 [25]	60 [27]	65 [29]	71 [32]							
apx. weight ferrous lb [kg]	--	22 [10]	36 [16]	49 [22]	62 [28]	76 [34]	89 [40]	102 [46]	116 [53]	--	--	--	--	--							

* Length of 01 station with relief cavity is 4.50 [114.3]. Gauge port not available on 01 station.

Port code	Valve mtg.	Manifold mtg.
P, S	0.25-20 UNC x 0.75 [19] DP	0.31-18 UNC x 0.44 [11.1] DP
B, M, T	M6 ISO 6H x 0.75 [19] DP	M8 ISO 6H x 0.44 [11.1] DP

Specifications, descriptions, and dimensional data are subject to correction or change without notice or incurring obligation. Download latest catalog page revisions at www.daman.com.

Ordering Information

For **coating options** see pages 245-246.

Material	Valve Pattern	Circuit	No. of Stations	Valve Spacing	Port Threads	/	Options

Material

A	Aluminum - 6061-T6 3000† psi • 20.7 MPa
D	Ductile Iron - D4512 5000† psi • 34.5 MPa
S*	Stainless Steel - 17-4 5000† psi • 34.5 MPa

† Working pressure should be considered in accordance with ISO 4413 to determine appropriate material type.

*All stainless steel products are passivated.

Valve Pattern

D05	ISO 4401-05-04 NFPA T3.5.1-D05 See Tech Information

Circuit

P	Parallel Circuit Standard Flow

No. of Stations

Aluminum	
01...21	Available with spacing code 3
02...14	Available with spacing code 5
Ductile Iron	
01...12	Available with spacing code 3
02...09	Available with spacing code 5
Stainless Steel	
01...06	Available with spacing code 3
02...04	Available with spacing code 5

Valve Spacing

3	3.25 inch 82.6 mm
5	5.00 inch 127.0 mm

Port Threads

		P & T	A & B	GA
P*	NPTF • ANSI B1.20.3	0.75	0.50	0.25
S	SAE • ISO 11926	-12	-8	-6
B	BSPP • ISO 1179	0.75	0.50	none
M	ISO • ISO 6149	M27	M18	none
T*	BSPT • ISO 7	0.75	0.50	none

* Pipe ports in stainless can experience galling

Options

See next page for available options and ordering codes.

Daman Products Company, Inc. • 1811 North Home Street • Mishawaka, IN 46545-7267
Tel: 800.959.7841 574.259.7841 • Fax: 800.241.7664 • Email: sales@daman.com • www.daman.com

Options - D05 Standard Flow Parallel Manifold

Contact Daman for cavity locations if critical.

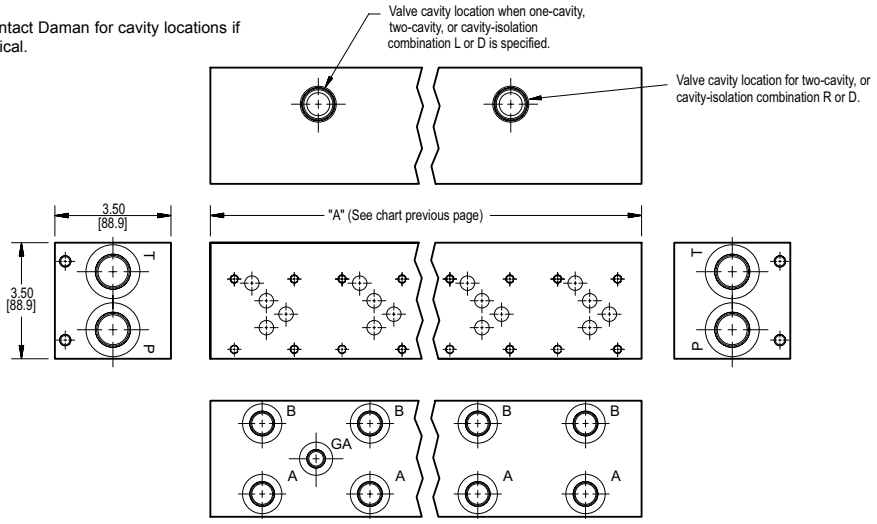

ISOLATIONS

Daman isolation options allow a manifold to have two independent pressure and/or tank ports. Isolations are drilled rather than plugged to ensure a leakproof and failproof isolation.

Ordering code letter:	* Isolation is between stations:	Available # of stations:
3.25 [82.6] spacing		
A	01 & 02	02-10
B	02 & 03	03-11
C	03 & 04	04-12
D	04 & 05	05-13
E	05 & 06	06-14
F	06 & 07	07-15
G	07 & 08	08-16
H	08 & 09	09-17
J	09 & 10	10-18
5.00 [127.0] spacing		
A	01 & 02	02-07
B	02 & 03	03-08
C	03 & 04	04-09
D	04 & 05	05-10
E	05 & 06	06-11
F	06 & 07	07-12

* Stations are numbered left to right.

Parallel Circuit with one or two Cavities

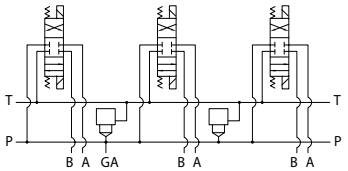

Valves with P in the nose and T out the side must be used.

Parallel Circuit with Isolations

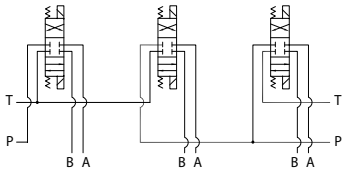

Manifold shown with P isolation between 1 & 2 (PA), and T isolation between 2 & 3 (TB).

Cavity & Isolation Combinations

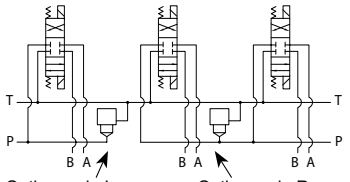

Option code L
Cavity left of isolation

Option code R
Cavity right of isolation

Option code D includes both cavities

NOTES:

1) The GA port is not available on a (1) station manifold.

2) The GA port is not available when a pressure isolation is located between stations 1 & 2.

3) Some cavity and isolation combinations are not possible with spacing code 3. Consult factory to determine availablity.

Ordering Information

... /	Cavity	Pressure Isolation	Tank Isolation	Cavity & Isolation Combinations

Cavity

Omit if cavities not required	
C	One Common cavity: With solenoid clearance. C-10-2 (P in nose) For valves w/1" hex max.
CC	Two Common cavities: With solenoid clearance C-10-2 (P in nose) Available 03-21 stations with spacing code 3; Available 02-14 stations with spacing code 5. Not available in combination with isolation options.
S	One Sun Cavity: T-3A (P in nose) See Tech Info for valves.

Pressure Isolation

Omit if P isolation not required	
PA...PJ	Available with spacing code 3
PA...PF	Available with spacing code 5

Tank Isolation

Omit if T isolation not required	
TA...TJ	Available with spacing code 3
TA...TF	Available with spacing code 5

Cavity & Isolation Combinations

Specify when using a combination of cavity and isolation options. Cavities do have solenoid clearance.	
L	Cavity is located left of the isolation.
R	Cavity is located right of the isolation.
D	Two cavities, one each side of isolation. (Use with cavity option codes C or S only.)

Daman Products Company, Inc. • 1811 North Home Street • Mishawaka, IN 46545-7267
Tel: 800.959.7841 574.259.7841 • Fax: 800.241.7664 • Email: sales@daman.com • www.daman.com

D05 Standard Flow Bottom Ported Manifold

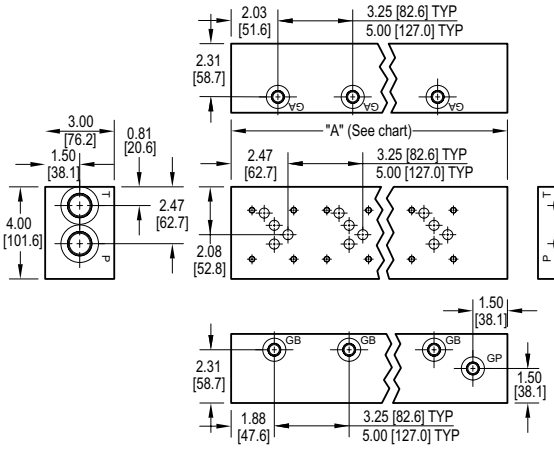

Mounting hardware is NOT supplied.

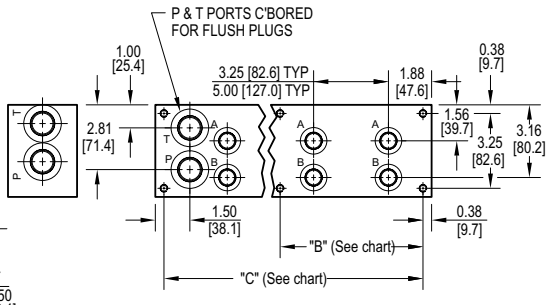

Parallel Circuit

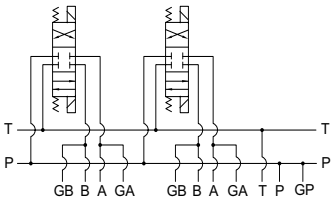

Flow Curve

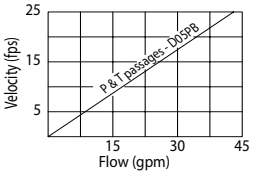

Rated flow 25 gpm @ 15 fps

Port code	Valve mtg.	Manifold mtg.
P, S	0.25-20 UNC x 0.56 [14.3] DP	0.38-16 UNC x 0.69 [17.5] DP
B, M, T	M6 ISO 6H x 0.56 [14.3] DP	M10 ISO 6H x 0.69 [17.5] DP

No. of stations	01	02	03	04	05	06	07	08	09	10
"A" length - inch [mm] Code 3 spacing	5.00 [127.0]	8.25 [209.6]	11.50 [292.1]	14.75 [374.7]	18.00 [457.2]	21.25 [539.8]	24.50 [622.3]	27.75 [704.9]	31.00 [787.4]	34.25 [870.0]
"B" dim - inch [mm] Code 3 spacing	--	--	--	--	--	9.63 [244.5]	9.63 [244.5]	12.88 [327.0]	12.88 [327.0]	16.13 [409.6]
"C" dim - inch [mm] Code 3 spacing	4.25 [108.0]	7.50 [190.5]	10.75 [273.1]	14.00 [355.6]	17.25 [438.2]	20.50 [520.7]	23.75 [603.3]	27.00 [685.8]	30.25 [768.4]	33.50 [850.9]
apx. weight alum lb [kg]	6 [3]	10 [4]	14 [6]	18 [8]	22 [10]	26 [12]	29 [13]	33 [15]	37 [17]	41 [19]
apx. weight ferrous lb [kg]	16 [7]	26 [12]	36 [16]	46 [21]	56 [25]	66 [30]	76 [35]	87 [39]	97 [44]	107 [48]

No. of stations	02	03	04	05	06	07	08	09	10
"A" length - inch [mm] Code 5 spacing	10.00 [254.0]	15.00 [381.0]	20.00 [508.0]	25.00 [635.0]	30.00 [762.0]	35.00 [889.0]	40.00 [1016.0]	45.00 [1143.0]	50.00 [1270.0]
"B" dim - inch [mm] Code 5 spacing	--	--	9.00 [228.6]	14.00 [355.6]	14.00 [355.6]	14.00 [355.6]	19.00 [482.6]	19.00 [482.6]	24.00 [609.6]
"C" dim - inch [mm] Code 5 spacing	9.25 [235.0]	14.25 [362.0]	19.25 [489.0]	24.25 [616.0]	29.25 [743.0]	34.25 [870.0]	39.25 [997.0]	44.25 [1124.0]	49.25 [1251.0]
apx. weight alum lb [kg]	12 [5]	18 [8]	24 [11]	30 [14]	36 [16]	42 [19]	48 [22]	54 [24]	60 [27]
apx. weight ferrous lb [kg]	31 [14]	47 [21]	62 [28]	78 [35]	94 [42]	109 [49]	125 [57]	140 [64]	156 [71]

Specifications, descriptions, and dimensional data are subject to correction or change without notice or incurring obligation. Download latest catalog page revisions at www.daman.com.

Ordering Information

Material	Valve Pattern	Circuit	No. of Stations	Valve Spacing	Port Threads

For **coating options** see pages 245-246.

Material

A	Aluminum - 6061-T6 3000† psi • 20.7 MPa
D	Ductile Iron - D4512 5000† psi • 34.5 MPa

† Working pressure should be considered in accordance with ISO 4413 to determine appropriate material type.

Circuit

PB	Parallel Circuit Standard Flow Bottom Ported

Valve Spacing

3	3.25 inch 82.6 mm
5	5.00 inch 127.0 mm

Valve Pattern

D05	ISO 4401-05-04 NFPA T3.5.1-D05 See Tech Information

No. of Stations

Aluminum	
01...10	Available with spacing code 3
02...10	Available with spacing code 5
Ductile Iron	
01...10	Available with spacing code 3
02...10	Available with spacing code 5

Port Threads

		P & T	A & B	G*
P	NPTF • ANSI B1.20.3	0.75	0.50	0.25
S	SAE • ISO 11926	-12	-8	-4
B	BSPP • ISO 1179	0.75	0.50	0.25
M	ISO • ISO 6149	M27	M18	M10
T	BSPT • ISO 7	0.75	0.50	0.25

Daman Products Company, Inc. • 1811 North Home Street • Mishawaka, IN 46545-7267
Tel: 800.959.7841 574.259.7841 • Fax: 800.241.7664 • Email: sales@daman.com • www.daman.com

D05 Tank Line Feed Circuit Manifold

D05 Directional Valves
2F06 Flow Control Valve
Valve mtg: D05: UNC 0.25-20 x 0.50 DP
2F06: UNC 0.31-18 x 0.63 DP

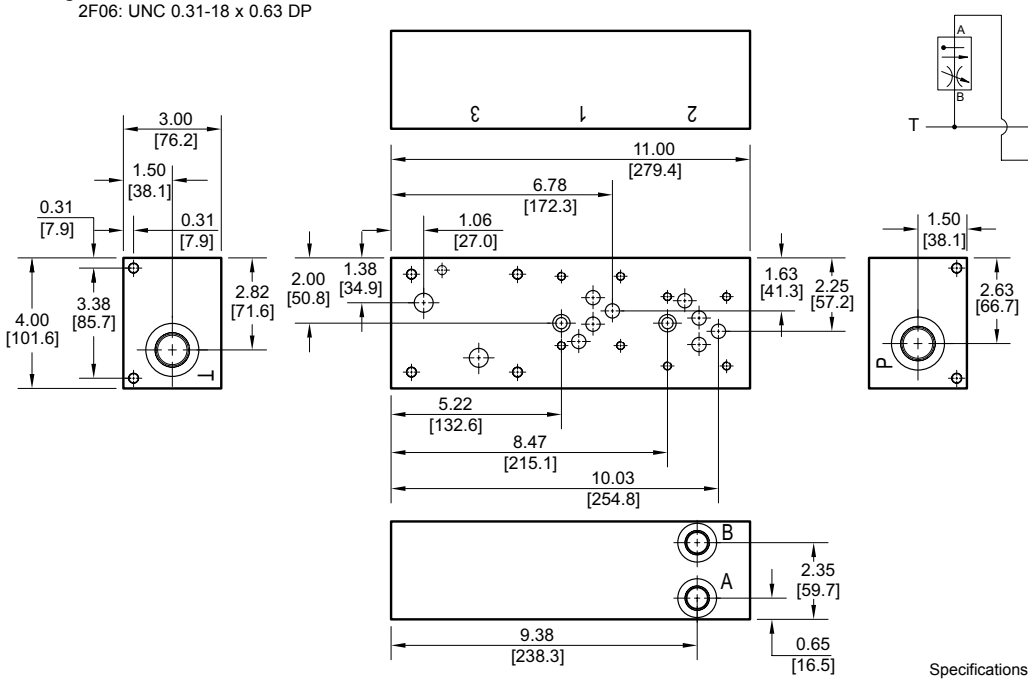

"Meter Out" Tank Feed Circuit

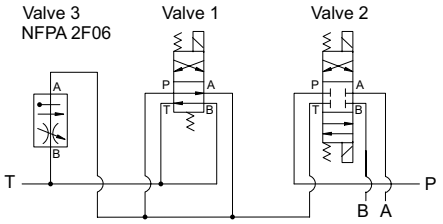

Manifold Mounting:

Manifold bracket mounting kit is supplied. See page 64 for itemized mounting kit list.

Two SHCS clearance holes are provided for optional 5/16 (M8) SHCS mounting. Screws are user provided; miminum 3.00 in [75mm] long GR8 SHCS should be used.

Specifications, descriptions, and dimensional data are subject to correction or change without notice or incurring obligation. Download latest catalog page revisions at www.daman.com.

Ordering Information

Material	Valve Pattern	Circuit	Port Threads

For **coating options** see pages 245-246.

Material	
A	Aluminum - 6061-T6 3000† psi • 20.7 MPa
D	Ductile Iron - D4512 5000† psi • 34.5 MPa

† Working pressure should be considered in accordance with ISO 4413 to determine appropriate material type.

Valve Pattern	
D05	ISO 4401-05-04 NFPA T3.5.1-D05 See Tech Information

Flow Control Pattern (REF):
2F06 Pattern
ISO 6263-06-05
NFPA T3.5.1-2F06

Circuit	
TF	Tank Line Feed Circuit

Port Threads		P & T	A & B
P	NPTF • ANSI B1.20.3	0.75	0.50
S	SAE • ISO 11926	-12	-8

Daman Products Company, Inc. • 1811 North Home Street • Mishawaka, IN 46545-7267
Tel: 800.959.7841 574.259.7841 • Fax: 800.241.7664 • Email: sales@daman.com • www.daman.com

Daman®

D05 High Flow Parallel Circuit Manifold

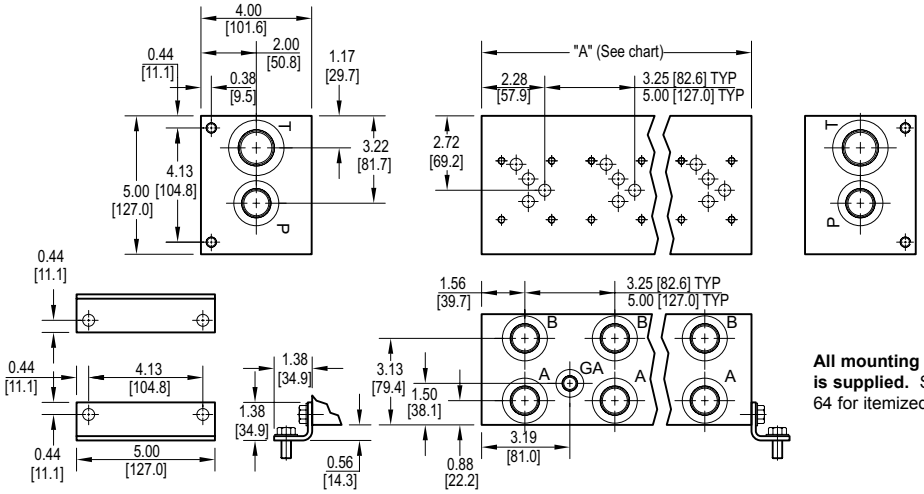

All mounting hardware is supplied. See page 64 for itemized list.

Parallel Circuit

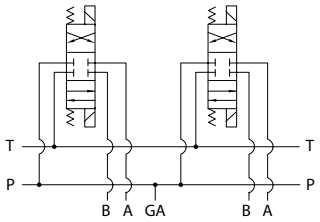

Flow Curve

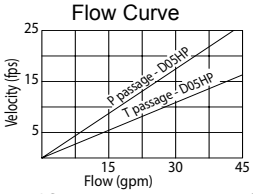

Rated flow Pressure 25 gpm @ 15 fps
Rated flow Tank 41 gpm @ 15 fps

No. of stations	* 01	02	03	04	05	06	07	08	09	10	11	12	13	14	15	16	17	18	19	20	21
"A" length (code 3 spa.) inch [mm]	3.25 [82.6]	6.50 [165.1]	9.75 [247.7]	13.00 [330.2]	16.25 [412.8]	19.50 [495.3]	22.75 [577.9]	26.00 [660.4]	29.25 [743.0]	32.50 [825.5]	35.75 [908.1]	39.00 [990.6]	42.25 [1073.2]	45.50 [1155.7]	48.75 [1238.3]	52.00 [1320.8]	55.25 [1403.4]	58.50 [1485.9]	61.75 [1568.5]	65.00 [1651.0]	68.25 [1733.6]
apx. weight alum lb [kg]	7 [3]	12 [5]	17 [8]	22 [10]	27 [12]	33 [15]	38 [17]	43 [20]	48 [22]	53 [24]	58 [26]	63 [29]	68 [31]	74 [34]	79 [36]	84 [38]	89 [40]	94 [43]	99 [45]	104 [47]	110 [50]
apx. weight ferrous lb [kg]	19 [9]	38 [17]	57 [26]	75 [34]	85 [39]	113 [51]	132 [60]	151 [69]	170 [77]	189 [86]	208 [94]	226 [103]	245 [111]	264 [120]	283 [128]	302 [137]	320 [145]	339 [154]	358 [162]	377 [171]	396 [180]
"A" length (code 5 spa.) inch [mm]	--	8.25 [209.6]	13.25 [336.6]	18.25 [463.6]	23.25 [590.6]	28.25 [717.6]	33.25 [844.6]	38.25 [971.6]	43.25 [1098.6]	48.25 [1225.6]	53.25 [1352.6]	58.25 [1479.6]	63.25 [1606.6]	68.25 [1733.6]							
apx. weight alum lb [kg]	--	18 [8]	26 [12]	33 [15]	41 [19]	48 [22]	56 [25]	63 [29]	71 [32]	79 [36]	87 [39]	95 [43]	103 [47]	111 [50]							
apx. weight ferrous lb [kg]	--	48 [22]	77 [35]	106 [48]	135 [61]	164 [74]	188 [85]	222 [101]	251 [114]	280 [127]	309 [140]	338 [153]	367 [166]	396 [180]							

* Length of 01 station with relief cavity is 4.50 [114.3]. Gauge port not available on 01 station.

Port code	Valve mtg.	Manifold mtg.
P, S	0.25-20 UNC x 0.75 [19] DP	0.38-16 UNC x 0.75 [19] DP
B, M, T	M6 ISO 6H x 0.75 [19] DP	M10 ISO 6H x 0.75 [19] DP

Specifications, descriptions, and dimensional data are subject to correction or change without notice or incurring obligation. Download latest catalog page revisions at www.daman.com.

Ordering Information

For **coating options** see pages 245-246.

Material	Valve Pattern	Circuit	No. of Stations	Valve Spacing	Port Threads	/	Options

Material

A	Aluminum - 6061-T6 3000† psi • 20.7 MPa
D	Ductile Iron - D4512 5000† psi • 34.5 MPa

† Working pressure should be considered in accordance with ISO 4413 to determine appropriate material type.

Circuit

HP	Parallel Circuit High Flow

Valve Spacing

3	3.25 inch 82.6 mm
5	5.00 inch 127.0 mm

Options

See next page for available options and ordering codes.

Valve Pattern

D05	ISO 4401-05-04 NFPA T3.5.1-D05 See Tech Information

No. of Stations

Aluminum	
01...21	Available with spacing code 3
02...14	Available with spacing code 5
Ductile Iron	
01...21	Available with spacing code 3
02...14	Available with spacing code 5

Port Threads

		P,A,B	T	X,Y,L optional	GA
P	NPTF • ANSI B1.20.3	0.75	1.00	0.38	0.25
S	SAE • ISO 11926	-12	-16	-6	-6
B	BSPP • ISO 1179	0.75	1.00	0.38	none
M	ISO • ISO 6149	M27	M33	M14	none
T	BSPT • ISO 7	0.75	1.00	0.38	none

Daman Products Company, Inc. • 1811 North Home Street • Mishawaka, IN 46545-7267
Tel: 800.959.7841 574.259.7841 • Fax: 800.241.7664 • Email: sales@daman.com • www.daman.com

Options - D05 High Flow Parallel Manifold

Pilot port location dimensions vary on (1) station manifolds and manifolds with isolations. Contact Daman for cavity locations if critical.

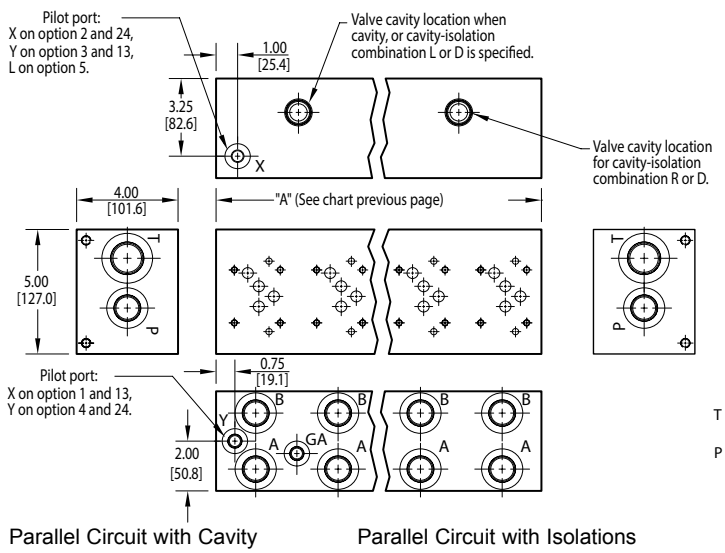

Parallel Circuit with X & Y

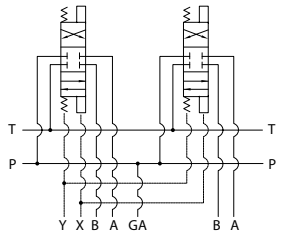

Parallel Circuit with L

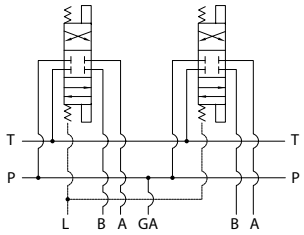

ISOLATIONS

Daman isolation options allow a manifold to have two independent pressure and/or tank ports. Isolations are drilled rather than plugged to ensure a leakproof and failproof isolation.

Ordering code letter:	* Isolation is between stations:	Available # of stations:
3.25 [82.6] spacing		
A	01 & 02	02-10
B	02 & 03	03-11
C	03 & 04	04-12
D	04 & 05	05-13
E	05 & 06	06-14
F	06 & 07	07-15
G	07 & 08	08-16
H	08 & 09	09-17
J	09 & 10	10-18
5.00 [127.0] spacing		
A	01 & 02	02-07
B	02 & 03	03-08
C	03 & 04	04-09
D	04 & 05	05-10
E	05 & 06	06-11
F	06 & 07	07-12

* Stations are numbered left to right.

Parallel Circuit with Cavity

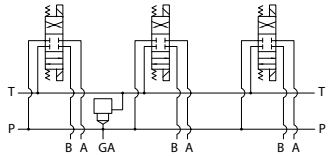

Valves with P in the nose and T out the side must be used.

Parallel Circuit with Isolations

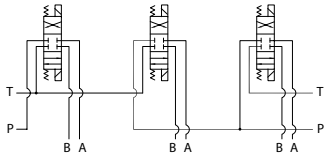

Manifold shown with P isolation between 1 & 2 (PA), and T isolation between 2 & 3 (TB).

Cavity & Isolation Combinations

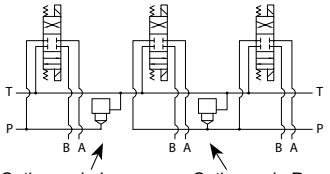

Option code L
Cavity left of isolation

Option code R
Cavity right of isolation

Option code D includes both cavities

NOTES:

1) The GA port is not available on a (1) station manifold.

2) The GA port is not available when a pressure isolation is located between stations 1 & 2.

3) Some cavity and isolation combinations are not possible. Consult factory to determine availablity.

Ordering Information

... /	Pilot Ports	Cavity	Pressure Isolation	Tank Isolation	Cavity & Isolation Combinations

Pilot Ports

Omit if pilot ports not required		Pilot ports available from 01-11 stations (3.25 spacing); 02-07 stations (5.00 spacing)
1	X port (USA std) NFPA T3.5.1-D05 Alt-B	
3	Y port (USA std) NFPA T3.5.1-D05 Alt-B	
13	X & Y ports (USA std) NFPA T3.5.1-D05 Alt-B	
2	X port ISO 4401-05-05 NFPA T3.5.1-D05 Alt-A	
4	Y port ISO 4401-05-05 NFPA T3.5.1-D05 Alt-A	
24	X & Y ports ISO 4401-05-05 NFPA T3.5.1-D05 Alt-A	
5	L ports Proportional valves	

Cavity

Omit if cavity not required	
C	Common cavity: With solenoid clearance. C-10-2 (P in nose) For valves w/1" hex max.
S	Sun Cavity T-3A (P in nose) See Tech Info for valves.

Pressure Isolation

Omit if P isolation not required	
PA...PJ	Available with spacing code 3
PA...PF	Available with spacing code 5

Tank Isolation

Omit if T isolation not required	
TA...TJ	Available with spacing code 3
TA...TF	Available with spacing code 5

Cavity & Isolation Combinations

Specify when using a combination of cavity and isolation options. Cavities do have solenoid clearance.

L	Relief cavity is located left of the isolation.
R	Relief cavity is located right of the isolation.
D	Two relief cavities, one each side of isolation.

Daman Products Company, Inc. • 1811 North Home Street • Mishawaka, IN 46545-7267
Tel: 800.959.7841 574.259.7841 • Fax: 800.241.7664 • Email: sales@daman.com • www.daman.com

D05 High Flow Parallel Circuit Manifold - Flange Ports

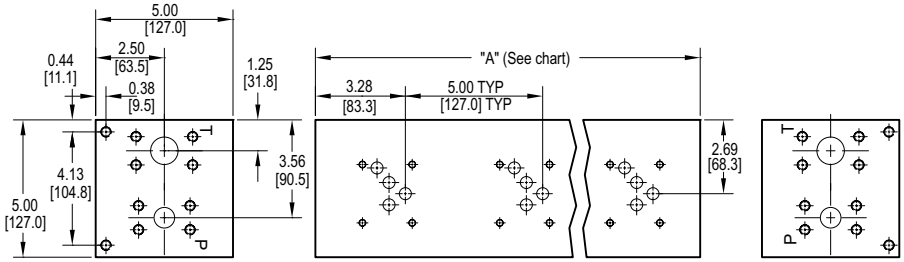

Parallel Circuit

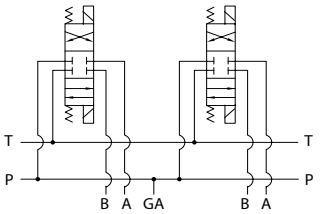

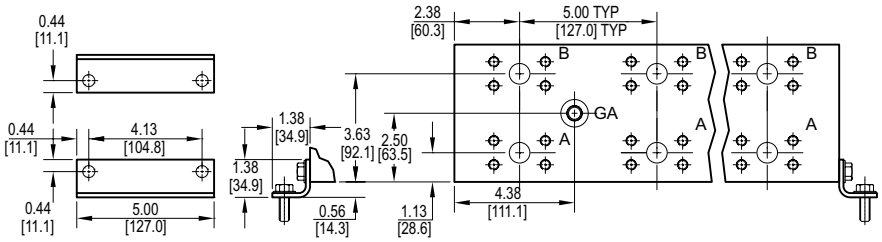

Flow Curve

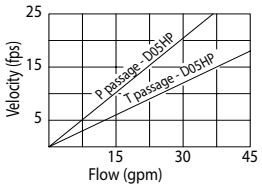

Rated flow Pressure 21 gpm @ 15 fps
Rated flow Tank 37 gpm @ 15 fps

All mounting hardware is supplied. See page 64 for itemized list.

No. of stations	* 01	02	03	04	05	06	07	08	09	10
"A" length inch [mm]	5.00 [127.0]	10.00 [254.0]	15.00 [381.0]	20.00 [508.0]	25.00 [635.0]	30.00 [762.0]	35.00 [889.0]	40.00 [1016.0]	45.00 [1143.0]	50.00 [1270.0]
apx. weight alum lb [kg]	13 [5.7]	25 [11]	38 [17]	50 [23]	63 [28]	75 [34]	88 [40]	100 [45]	112 [51]	125 [57]
apx. weight ferrous lb [kg]	34 [15.3]	68 [31]	101 [46]	135 [61]	169 [77]	203 [92]	236 [107]	270 [123]	304 [138]	338 [153]

* Length of 01 station with relief cavity is 5.75 [146.1]. Gauge port not available on 01 station.

Port code	Valve mtg.	Manifold mtg.	Flange mtg.	GA Port	Pilot Ports *
F	0.25-20 UNC x 0.75 [19] DP	0.38-16 UNC x 0.75 [19] DP	ISO 6162 Type II - Inch	**-6** SAE J1926	**-6** SAE J1926
F / M	M6 ISO 6H x 0.75 [19] DP	M10 ISO 6H x 0.75 [19] DP	ISO 6162 Type I - metric	NONE	**M14** ISO 6149

* Pilot ports are optional. See options on next page.

Specifications, descriptions, and dimensional data are subject to correction or change without notice or incurring obligation. Download latest catalog page revisions at www.daman.com.

Ordering Information

For **coating options** see pages 245-246.

Material	Valve Pattern	Circuit	No. of Stations	Valve Spacing	Port Threads	/	Options

Material

A	Aluminum - 6061-T6 3000† psi • 20.7 MPa
D	Ductile Iron - D4512 5000† psi • 34.5 MPa

† Working pressure should be considered in accordance with ISO 4413 to determine appropriate material type.

Circuit

HP	Parallel Circuit High Flow

Valve Spacing

5	5.00 inch 127.0 mm

Options

See next page for available options and ordering codes.

Valve Pattern

D05	ISO 4401-05-04 NFPA T3.5.1-D05 See Tech Information

No. of Stations

Aluminum	
01...10	Available with spacing code 5
Ductile Iron	
01...10	Available with spacing code 5

Port Threads

		P,A,B	T
F	**CODE 61 4-Bolt Flange** SAE J518 - CODE 61 ISO 6162 - 2.5 to 35 MPa	0.75 CODE 61	1.00 CODE 61

Daman Products Company, Inc. • 1811 North Home Street • Mishawaka, IN 46545-7267
Tel: 800.959.7841 574.259.7841 • Fax: 800.241.7664 • Email: sales@daman.com • www.daman.com

Options - D05 High Flow Parallel Manifold Flange Ports

Contact Daman for cavity locations if critical.

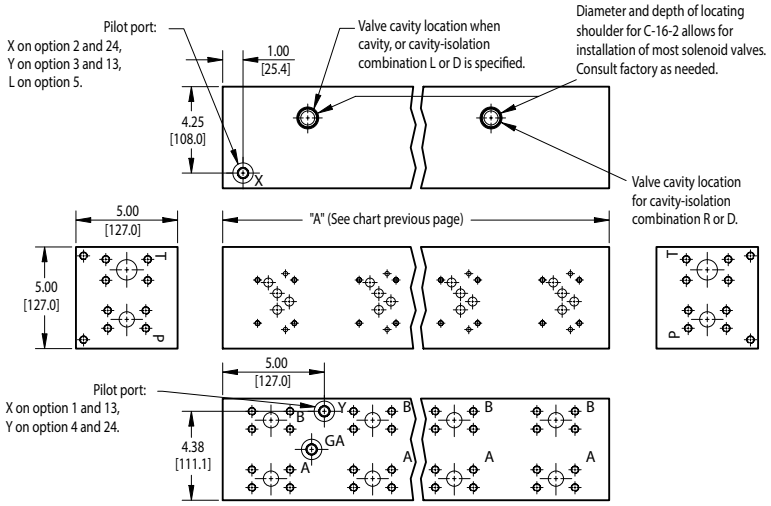

Parallel Circuit with X & Y

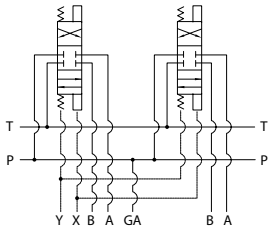

Parallel Circuit with L

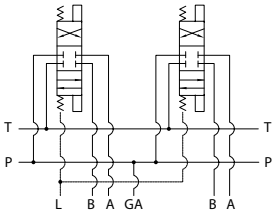

ISOLATIONS

Daman isolation options allow a manifold to have two independent pressure and/or tank ports. Isolations are drilled rather than plugged to ensure a leakproof and failproof isolation.

Ordering code letter:	* Isolation is between stations:	Available # of stations:
A	01 & 02	02-08
B	02 & 03	03-09
C	03 & 04	04-10
D	04 & 05	05-10
E	05 & 06	06-10
F	06 & 07	07-10
G	07 & 08	08-10
H	08 & 09	09-10

* Stations are numbered left to right.

NOTES:

1) The GA port is not available when a pressure isolation is located between stations 1 & 2.

Parallel Circuit with Cavity

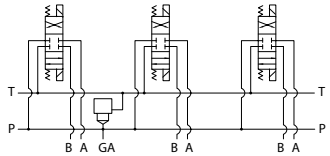

Valves with P in the nose and T out the side must be used.

Parallel Circuit with Isolations

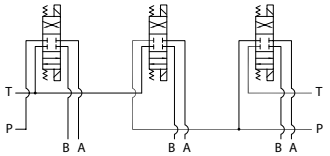

Manifold shown with P isolation between 1 & 2 (PA), and T isolation between 2 & 3 (TB).

Cavity & Isolation Combinations

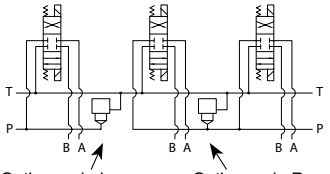

Option code L
Cavity left of isolation

Option code R
Cavity right of isolation

Option code D includes both cavities

Ordering Information

... /	Thread Type	Pilot Ports	Cavity	Pressure Isolation	Tank Isolation	Cavity & Isolation Combinations

Thread Type

Omit	Inch threads / ports
M	Metric threads / ports

Pilot Ports

Omit if pilot ports not required

1	X port (USA std) NFPA T3.5.1-D05 Alt-B
3	Y port (USA std) NFPA T3.5.1-D05 Alt-B
13	X & Y ports (USA std) NFPA T3.5.1-D05 Alt-B
2	X port ISO 4401-05-05 NFPA T3.5.1-D05 Alt-A
4	Y port ISO 4401-05-05 NFPA T3.5.1-D05 Alt-A
24	X & Y ports ISO 4401-05-05 NFPA T3.5.1-D05 Alt-A
5	L ports Proportional valves

Pilot ports available from 01-08 stations

Cavity

Omit if cavity not required

C	Common cavity: C-16-2 (P in nose)
S	Sun Cavity: T-3A (P in nose) See Tech Info for valves.

Pressure Isolation

Omit if P isolation not required

PA...PH	Available with spacing code 5

Tank Isolation

Omit if T isolation not required

TA...TH	Available with spacing code 5

Cavity & Isolation Combinations

Specify when using a combination of cavity and isolation options. Cavities do have solenoid clearance.

L	Relief cavity is located left of the isolation.
R	Relief cavity is located right of the isolation.
D	Two relief cavities, one each side of isolation.

Daman Products Company, Inc. • 1811 North Home Street • Mishawaka, IN 46545-7267
Tel: 800.959.7841 574.259.7841 • Fax: 800.241.7664 • Email: sales@daman.com • www.daman.com

D05 High Flow Bottom Ported Manifold

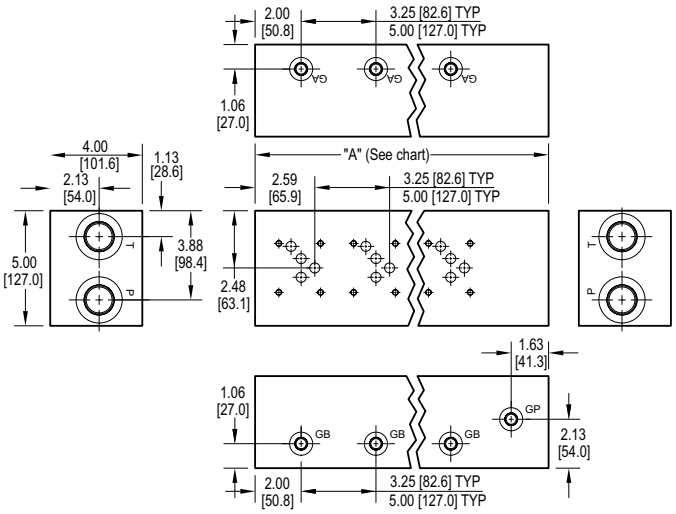

Mounting hardware is NOT supplied.

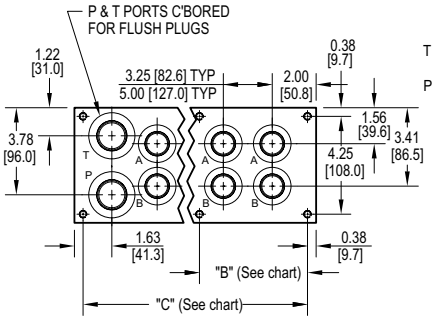

Port code	Valve mtg.	Manifold mtg.
P, S	0.25-20 UNC x 0.63 [16] DP	0.38-16 UNC x 1.00 [25.4] DP
B, M, T	M6 ISO 6H x 0.63 [16] DP	M10 ISO 6H x 1.00 [25.4] DP

Parallel Circuit

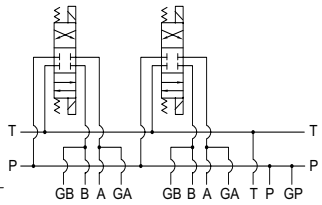

Flow Curve

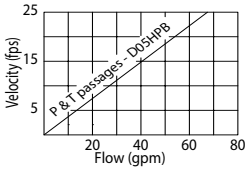

Rated flow 41 gpm @ 15 fps

No. of stations	01	02	03	04	05	06	07	08	09	10
"A" length (code 3 spa.) inch [mm]	5.75 [146.1]	9.00 [228.6]	12.25 [311.2]	15.50 [393.7]	18.75 [476.3]	22.00 [558.8]	25.25 [641.4]	28.50 [723.9]	31.75 [806.5]	35.00 [889.0]
"B" dim (code 3 spa.) inch [mm]	--	--	--	--	--	9.75 [247.7]	13.00 [330.2]	13.00 [330.2]	16.25 [412.8]	16.25 [412.8]
"C" dim (code 3 spa.) inch [mm]	5.00 [127.0]	8.25 [209.6]	11.50 [292.1]	14.75 [374.7]	18.00 [457.2]	21.25 [539.8]	24.50 [622.3]	27.75 [704.9]	31.00 [787.4]	34.25 [870.0]
apx. weight alum lb [kg]	12 [5]	18 [8]	25 [11]	31 [14]	38 [17]	44 [20]	51 [23]	57 [26]	64 [29]	70 [32]
apx. weight ferrous lb [kg]	30 [14]	47 [21]	64 [29]	81 [37]	98 [44]	114 [52]	131 [60]	148 [67]	165 [75]	182 [83]

No. of stations	02	03	04	05	06
"A" length (code 5 spa.) inch [mm]	10.75 [273.1]	15.75 [400.1]	20.75 [527.1]	25.75 [654.1]	30.75 [781.1]
"B" dim (code 5 spa.) inch [mm]	--	--	9.38 [238.1]	9.38 [238.1]	14.38 [365.1]
"C" dim (code 5 spa.) inch [mm]	10.00 [254.0]	15.00 [381.0]	20.00 [508.0]	25.00 [635.0]	30.00 [762.0]
apx. weight alum lb [kg]	22 [10]	32 [14]	42 [19]	52 [23]	62 [28]
apx. weight ferrous lb [kg]	56 [25]	82 [37]	108 [49]	134 [61]	160 [73]

Specifications, descriptions, and dimensional data are subject to correction or change without notice or incurring obligation. Download latest catalog page revisions at www.daman.com.

Ordering Information

For **coating options** see pages 245-246.

Material	Valve Pattern	Circuit	No. of Stations	Valve Spacing	Port Threads	/	Options

Material

A	Aluminum - 6061-T6 3000† psi • 20.7 MPa
D	Ductile Iron - D4512 5000† psi • 34.5 MPa

† Working pressure should be considered in accordance with ISO 4413 to determine appropriate material type.

Circuit

HPB	Parallel Circuit High Flow Bottom Ported

Valve Spacing

3	3.25 inch 82.6 mm
5	5.00 inch 127.0 mm

Options

See next page for available options and ordering codes.

Valve Pattern

D05	ISO 4401-05-04 NFPA T3.5.1-D05 See Tech Infomation

No. of Stations

Aluminum	
01...10	Available with spacing code 3
02...06	Available with spacing code 5
Ductile Iron	
01...10	Available with spacing code 3
02...06	Available with spacing code 5

Port Threads

		P & T	A & B	X,Y,L optional	G*
P	NPTF • ANSI B1.20.3	1.00	0.75	0.38	0.25
S	SAE • ISO 11926	-16	-12	-6	-4
B	BSPP • ISO 1179	1.00	0.75	0.38	0.25
M	ISO • ISO 6149	M33	M27	M14	M10
T	BSPT • ISO 7	1.00	0.75	0.38	0.25

Daman Products Company, Inc. • 1811 North Home Street • Mishawaka, IN 46545-7267
Tel: 800.959.7841 574.259.7841 • Fax: 800.241.7664 • Email: sales@daman.com • www.daman.com

Options - D05 High Flow Parallel Manifold Bottom Ported

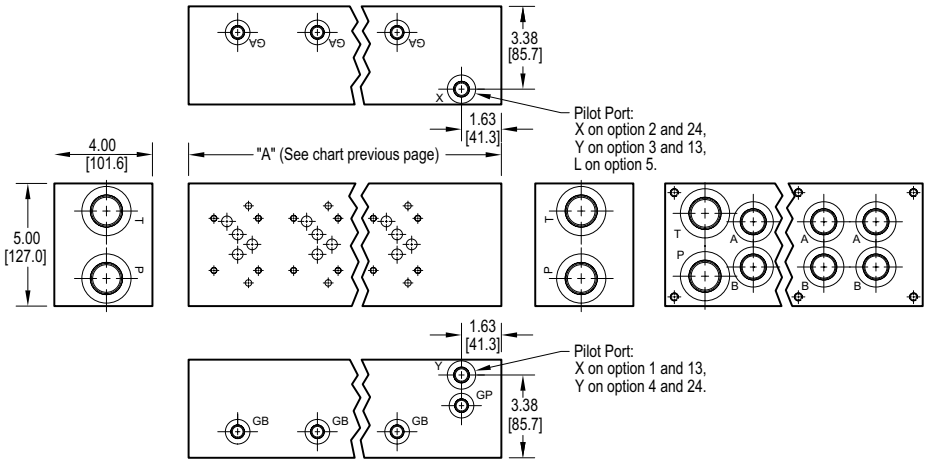

Parallel Circuit with X & Y

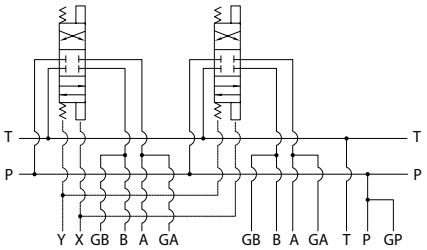

Parallel Circuit with L

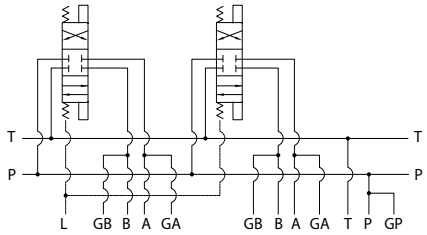

Ordering Information

... /	Pilot Ports

Pilot Ports	
Omit if pilot ports not required	
1	X port (USA std) NFPA T3.5.1-D05 Alt-B
3	Y port (USA std) NFPA T3.5.1-D05 Alt-B
13	X & Y ports (USA std) NFPA T3.5.1-D05 Alt-B
2	X port ISO 4401-05-05 NFPA T3.5.1-D05 Alt-A
4	Y port ISO 4401-05-05 NFPA T3.5.1-D05 Alt-A
24	X & Y ports ISO 4401-05-05 NFPA T3.5.1-D05 Alt-A
5	L ports Proportional valves

Daman Products Company, Inc. • 1811 North Home Street • Mishawaka, IN 46545-7267
Tel: 800.959.7841 574.259.7841 • Fax: 800.241.7664 • Email: sales@daman.com • www.daman.com

D05 Extra High Flow Parallel Circuit Manifold

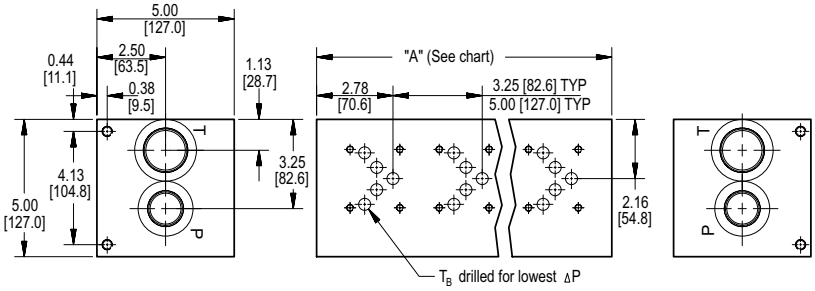

Parallel Circuit

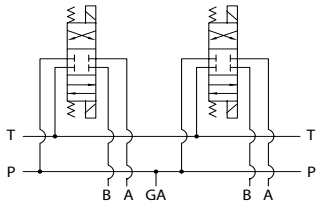

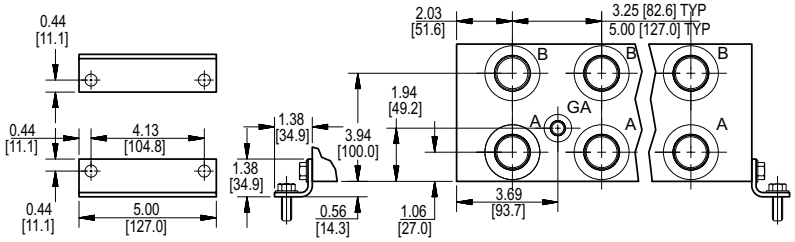

Flow Curve

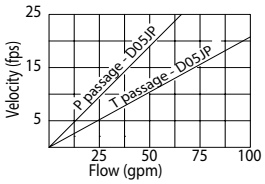

Rated flow Pressure 41 gpm @ 15 fps
Rated flow Tank 72 gpm @ 15 fps

No. of stations	* 01	02	03	04	05	06	07	08	09	10
"A" length (code 3 spa.) inch [mm]	4.25 [108.0]	7.50 [190.5]	10.75 [273.1]	14.00 [355.6]	17.25 [438.2]	20.50 [520.7]	23.75 [603.3]	27.00 [685.8]	30.25 [768.4]	33.50 [850.9]
apx. weight alum lb [kg]	10 [5]	18 [8]	26 [12]	35 [16]	43 [20]	51 [23]	59 [27]	67 [30]	75 [34]	83 [38]
apx. weight ferrous lb [kg]	27 [12]	48 [22]	69 [31]	91 [41]	112 [51]	133 [60]	154 [70]	175 [79]	196 [89]	217 [99]
"A" length (code 5 spa.) inch [mm]	--	9.25 [235.0]	14.25 [362.0]	19.25 [489.0]	24.25 [616.0]	29.25 [743.0]				
apx. weight alum lb [kg]	--	23 [10]	35 [16]	48 [22]	60 [27]	73 [33]				
apx. weight ferrous lb [kg]	--	60 [27.2]	92 [41.8]	125 [56.8]	157 [71.3]	190 [86.3]				

* Length of 01 station with relief cavity is 5.50 [139.7]. Gauge port not available on 01 station.

All mounting hardware is supplied.
See page 65 for itemized list.

Port code	Valve mtg.	Manifold mtg.
P, S	0.25-20 UNC x 0.75 [19] DP	0.38-16 UNC x 0.75 [19] DP
B, M, T	M6 ISO 6H x 0.75 [19] DP	M10 ISO 6H x 0.75 [19] DP

Specifications, descriptions, and dimensional data are subject to correction or change without notice or incurring obligation.
Download latest catalog page revisions at www.daman.com.

Ordering Information

For **coating options** see pages 245-246.

Material	Valve Pattern	Circuit	No. of Stations	Valve Spacing	Port Threads	/	Options

Material

A	Aluminum - 6061-T6 3000† psi • 20.7 MPa
D	Ductile Iron - D4512 5000† psi • 34.5 MPa

† Working pressure should be considered in accordance with ISO 4413 to determine appropriate material type.

Circuit

JP	Parallel Circuit Extra High Flow

Valve Spacing

3	3.25 inch 82.6 mm
5	5.00 inch 127.0 mm

Options

See next page for available options and ordering codes.

Valve Pattern

D05	ISO 4401-05-04 NFPA T3.5.1-D05 See Tech Information

No. of Stations

Aluminum	
01...10	Available with spacing code 3
02...06	Available with spacing code 5
Ductile Iron	
01...10	Available with spacing code 3
02...06	Available with spacing code 5

Port Threads		P,A,B	T	X,Y,L optional	GA
P	NPTF • ANSI B1.20.3	1.00	1.25	0.38	0.25
S	SAE • ISO 11926	-16	-20	-6	-6
B	BSPP • ISO 1179	1.00	1.25	0.38	none
M	ISO • ISO 6149	M33	M42	M14	none
T	BSPT • ISO 7	1.00	1.25	0.38	none

Daman Products Company, Inc. • 1811 North Home Street • Mishawaka, IN 46545-7267
Tel: 800.959.7841 574.259.7841 • Fax: 800.241.7664 • Email: sales@daman.com • www.daman.com

Options - D05 Extra High Flow Parallel Manifold

Pilot port location dimensions vary on (1) station manifolds and manifolds with isolations. Contact Daman for cavity locations if critical.

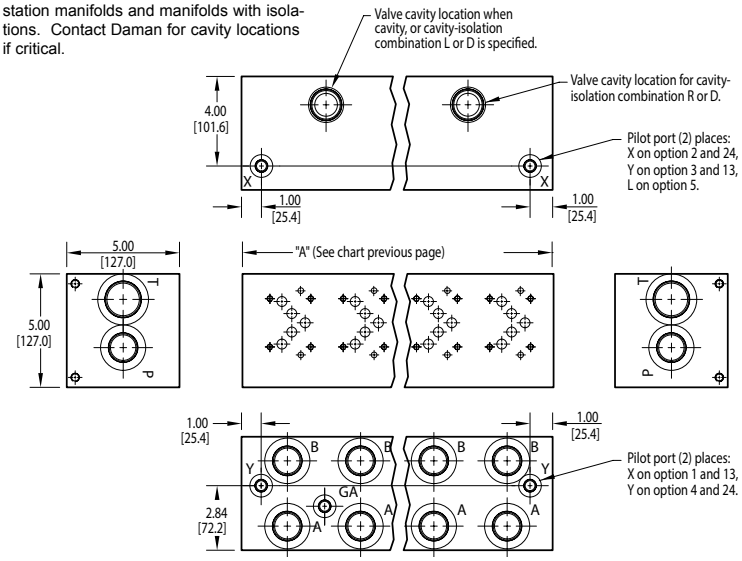

Parallel Circuit with X & Y

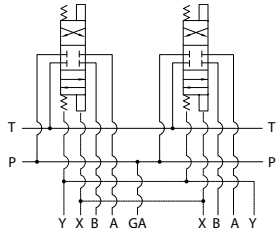

Parallel Circuit with L

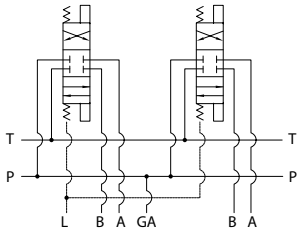

ISOLATIONS

Daman isolation options allow a manifold to have two independent pressure and/or tank ports. Isolations are drilled rather than plugged to ensure a leakproof and failproof isolation.

Ordering code letter:	* Isolation is between stations:	Available # of stations:
3.25 [82.6] spacing		
A	01 & 02	02-10
B	02 & 03	03-10
C	03 & 04	04-10
D	04 & 05	05-10
E	05 & 06	06-10
F	06 & 07	07-10
G	07 & 08	08-10
H	08 & 09	09-10
J	09 & 10	10
5.00 [127.0] spacing		
A	01 & 02	02-06
B	02 & 03	03-06
C	03 & 04	04-06
D	04 & 05	05-06
E	05 & 06	06

* Stations are numbered left to right.

Parallel Circuit with Cavity

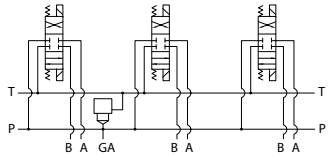

Valves with P in the nose and T out the side must be used.

Parallel Circuit with Isolations

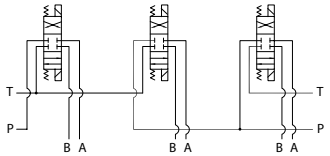

Manifold shown with P isolation between 1 & 2 (PA), and T isolation between 2 & 3 (TB).

Cavity & Isolation Combinations

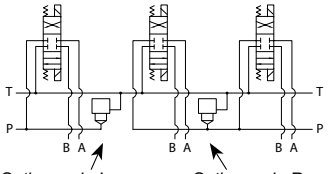

Option code L
Cavity left of isolation

Option code R
Cavity right of isolation

Option code D includes both cavities

NOTES:

1) The GA port is not available on a (1) station manifold.

2) The GA port is not available when a pressure isolation is located between stations 1 & 2.

3) Some cavity and isolation combinations are not possible. Consult factory to determine availablity.

Ordering Information

... /	Pilot Ports	Cavity	Pressure Isolation	Tank Isolation	Cavity & Isolation Combinations

Pilot Ports

Omit if pilot ports not required	
1	X port (USA std) NFPA T3.5.1-D05 Alt-B
3	Y port (USA std) NFPA T3.5.1-D05 Alt-B
13	X & Y ports (USA std) NFPA T3.5.1-D05 Alt-B
2	X port ISO 4401-05-05 NFPA T3.5.1-D05 Alt-A
4	Y port ISO 4401-05-05 NFPA T3.5.1-D05 Alt-A
24	X & Y ports ISO 4401-05-05 NFPA T3.5.1-D05 Alt-A
5*	L ports Proportional valves

Cavity

Omit if cavity not required	
C	Common cavity: With solenoid clearance. C-16-2 (P in nose)
S	Sun Cavity: T-16A (P in nose) See Tech Info for valves.

Pressure Isolation

Omit if P isolation not required	
PA...PJ	Available with spacing code 3
PA...PE	Available with spacing code 5

Tank Isolation

Omit if T isolation not required	
TA...TJ	Available with spacing code 3
TA...TE	Available with spacing code 5

Cavity & Isolation Combinations

Specify when using a combination of cavity and isolation options. Cavities do have solenoid clearance.	
L	Relief cavity is located left of the isolation.
R	Relief cavity is located right of the isolation.
D	Two relief cavities, one each side of isolation.

* Cannot be combined with the following other pilot port options: /3, /13, /2, or /24

Daman Products Company, Inc. • 1811 North Home Street • Mishawaka, IN 46545-7267
Tel: 800.959.7841 574.259.7841 • Fax: 800.241.7664 • Email: sales@daman.com • www.daman.com

D05 Standard Flow Series Circuit Manifold

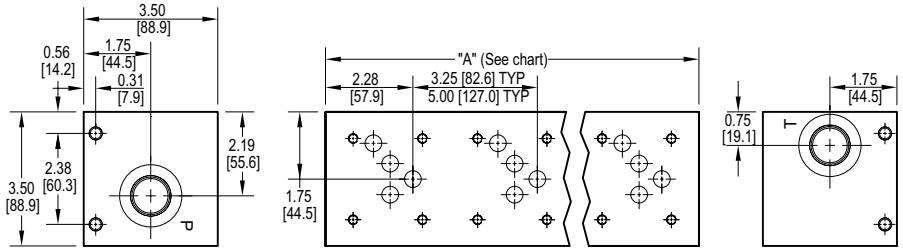

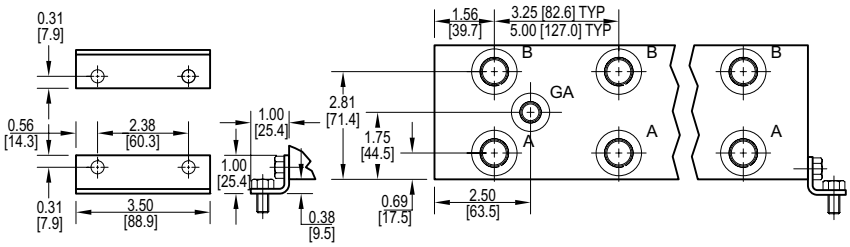

Series Circuit

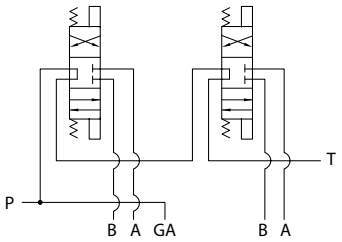

No. of stations	02	03	04
"A" length (code 3 spa.) inch [mm]	6.50 [165.1]	9.75 [247.7]	13.00 [330.2]
apx. weight alum lb [kg]	8 [4]	11 [5]	14 [7]
apx. weight ferrous lb [kg]	17 [8]	26 [12]	34 [15]
"A" length (code 5 spa.) inch [mm]	8.25 [209.6]	13.25 [336.6]	18.25 [463.6]
apx. weight alum lb [kg]	9 [4]	15 [7]	20 [9]
apx. weight ferrous lb [kg]	22 [10]	36 [16]	49 [22]

All mounting hardware is supplied, except for stainless.
See page 64 for itemized list.

Port code	Valve mtg.	Manifold mtg.
P, S	0.25-20 UNC x 0.75 [19] DP	0.31-18 UNC x 0.44 [11.1] DP
B, M, T	M6 ISO 6H x 0.75 [19] DP	M8 ISO 6H x 0.44 [11.1] DP

Specifications, descriptions, and dimensional data are subject to correction or change without notice or incurring obligation. Download latest catalog page revisions at www.daman.com.

Ordering Information

For **coating options** see pages 245-246.

Material	Valve Pattern	Circuit	No. of Stations	Valve Spacing	Port Threads	/	Options

Material

A	Aluminum - 6061-T6 3000† psi • 20.7 MPa
D	Ductile Iron - D4512 5000† psi • 34.5 MPa
S*	Stainless Steel - 17-4 5000† psi • 34.5 MPa

† Working pressure should be considered in accordance with ISO 4413 to determine appropriate material type.

*All stainless steel products are passivated.

Valve Pattern

D05	ISO-4401-05-04 NFPA T3.5.1-D05 See Tech Information

Circuit

S	Series Circuit Standard Flow

No. of Stations

Aluminum	
02...04	Available with spacing code 3
02...04	Available with spacing code 5
Ductile Iron	
02...04	Available with spacing code 3
02...04	Available with spacing code 5
Stainless Steel	
02...04	Available with spacing code 3
02...04	Available with spacing code 5

Valve Spacing

3	3.25 inch 82.6 mm
5	5.00 inch 127.0 mm

Port Threads

		P & T	A & B	GA
P*	NPTF • ANSI B1.20.3	0.75	0.50	0.25
S	SAE • ISO 11926	-12	-8	-6
B	BSPP • ISO 1179	0.75	0.50	none
M	ISO • ISO 6149	M27	M18	none
T*	BSPT • ISO 7	0.75	0.50	none

* Pipe ports in stainless can experience galling

Options

See next page for available options and ordering codes.

Daman Products Company, Inc. • 1811 North Home Street • Mishawaka, IN 46545-7267
Tel: 800.959.7841 574.259.7841 • Fax: 800.241.7664 • Email: sales@daman.com • www.daman.com

Options - D05 Standard Flow Series Manifold

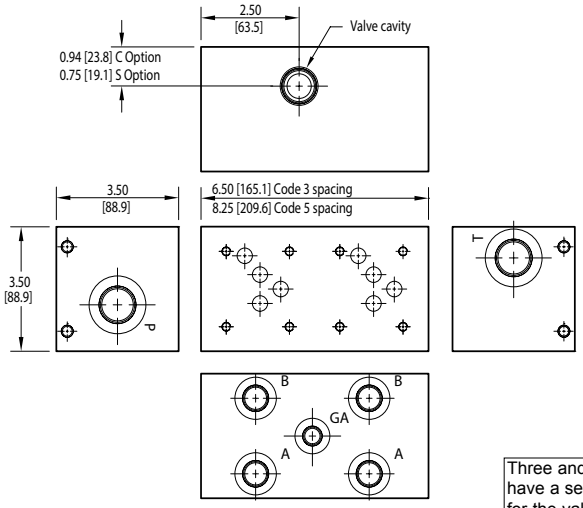

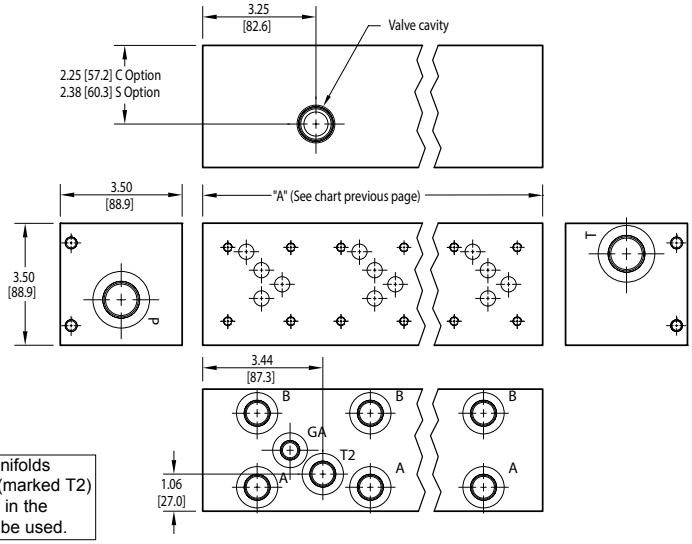

Three and Four station manifolds have a separate side port (marked T2) for the valve. Valve with P in the nose, T out the side, must be used.

Series Circuit with Cavity - (2) station

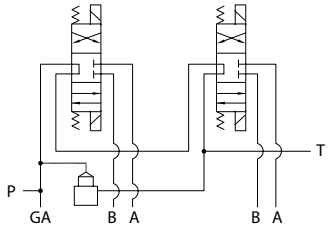

Series Circuit with Cavity - (3) or (4) station

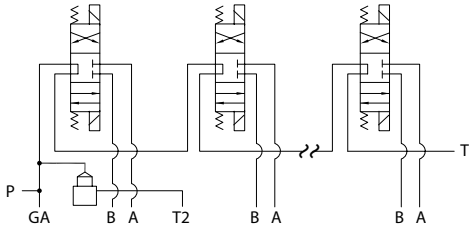

Ordering Information

... /	Cavity

Cavity	
Omit if cavity not required.	
C	Common cavity: 2-station has solenoid clearance. 3 & 4 station does not have solenoid clearance. C-10-2 (P in nose) For valves w/1" hex max.
S	Sun Cavity: T-3A (P in nose) See Tech Info for valves.

Port Code (ref.)	T2 Port Size 3 and 4 Station Manifold
P	0.50 NPTF • ANSI B1.20.3
S	-8 SAE • ISO 11926
B	0.50 BSPP • ISO 1179
M	M18 ISO • ISO 6149
T	0.50 BSPT • ISO 7

Daman Products Company, Inc. • 1811 North Home Street • Mishawaka, IN 46545-7267
Tel: 800.959.7841 574.259.7841 • Fax: 800.241.7664 • Email: sales@daman.com • www.daman.com

D05 High Flow Series Circuit Manifold

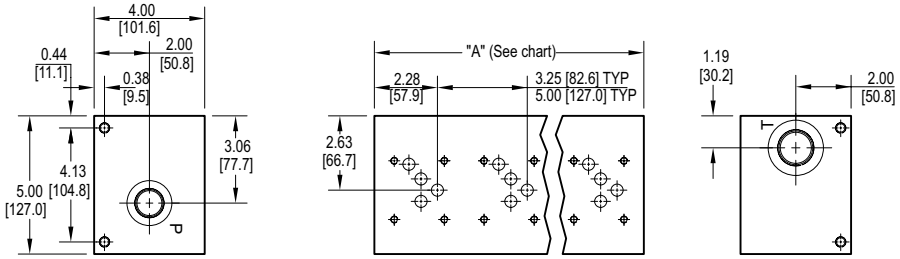

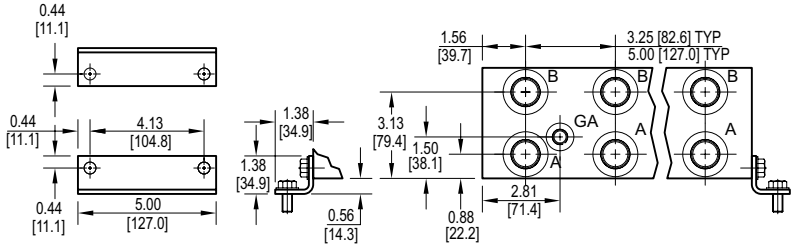

Series Circuit

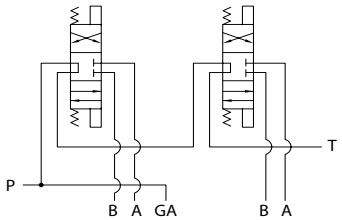

No. of stations	02	03	04
"A" length (code 3 spa.) inch [mm]	6.50 [165.1]	9.75 [247.7]	13.00 [330.2]
apx. weight alum lb [kg]	12 [5]	17 [8]	22 [10]
apx. weight ferrous lb [kg]	38 [17]	57 [26]	75 [34]
"A" length (code 5 spa.) inch [mm]	8.25 [209.6]	13.25 [336.6]	18.25 [463.6]
apx. weight alum lb [kg]	18 [8]	26 [12]	33 [15]
apx. weight ferrous lb [kg]	48 [22]	77 [35]	106 [48]

All mounting hardware is supplied.
See page 64 for itemized list.

Port code	Valve mtg.	Manifold mtg.
P, S	0.25-20 UNC x 0.75 [19] DP	0.38-16 UNC x 0.75 [19] DP
B, M, T	M6 ISO 6H x 0.75 [19] DP	M10 ISO 6H x 0.75 [19] DP

Specifications, descriptions, and dimensional data are subject to correction or change without notice or incurring obligation. Download latest catalog page revisions at www.daman.com.

Ordering Information

For **coating options** see pages 245-246.

Material	Valve Pattern	Circuit	No. of Stations	Valve Spacing	Port Threads	/	Options

Material

A	Aluminum - 6061-T6 3000† psi • 20.7 MPa
D	Ductile Iron - D4512 5000† psi • 34.5 MPa

† Working pressure should be considered in accordance with ISO 4413 to determine appropriate material type.

Circuit

HS	Series Circuit High Flow

Valve Spacing

3	3.25 inch 82.6 mm
5	5.00 inch 127.0 mm

Options

See next page for available options and ordering codes.

Valve Pattern

D05	ISO 4401-05-04 NFPA T3.5.1-D05 See Tech Information

No. of Stations

Aluminum	
02...04	Available with spacing code 3
02...04	Available with spacing code 5
Ductile Iron	
02...04	Available with spacing code 3
02...04	Available with spacing code 5

Port Threads

		P,A,B	T	X,Y,L optional	GA
P	NPTF • ANSI B1.20.3	0.75	1.00	0.38	0.25
S	SAE • ISO 11926	-12	-16	-6	-6
B	BSPP • ISO 1179	0.75	1.00	0.38	none
M	ISO • ISO 6149	M27	M33	M14	none
T	BSPT • ISO 7	0.75	1.00	0.38	none

Daman Products Company, Inc. • 1811 North Home Street • Mishawaka, IN 46545-7267
Tel: 800.959.7841 574.259.7841 • Fax: 800.241.7664 • Email: sales@daman.com • www.daman.com

Options - D05 High Flow Series Manifold

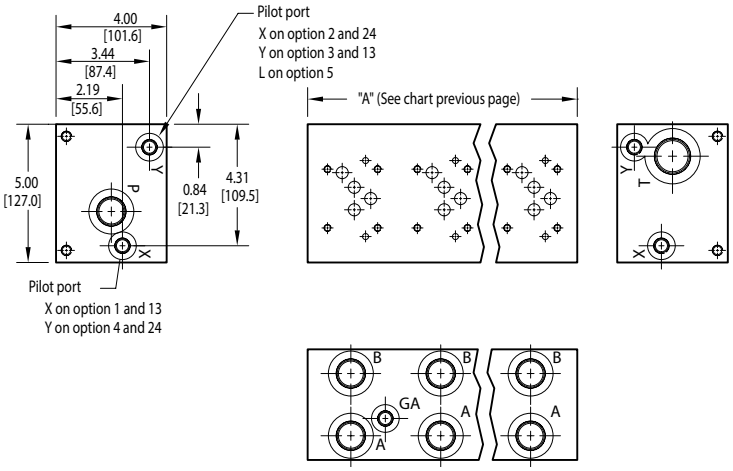

Series Circuit with X & Y

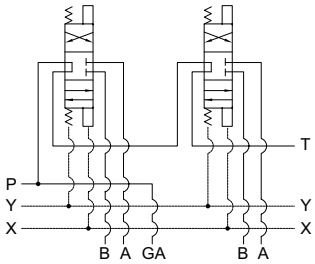

Series Circuit with L

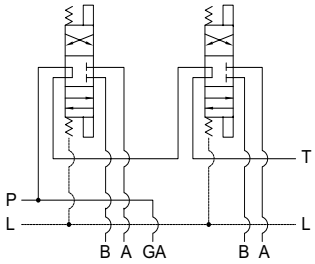

Ordering Information

... /	Pilot Ports

Pilot Ports	
Omit if pilot ports not required	
1	X port (USA std) NFPA T3.5.1-D05 Alt-B
3	Y port (USA std) NFPA T3.5.1-D05 Alt-B
13	X & Y ports (USA std) NFPA T3.5.1-D05 Alt-B
2	X port ISO 4401-05-05 NFPA T3.5.1-D05 Alt-A
4	Y port ISO 4401-05-05 NFPA T3.5.1-D05 Alt-A
24	X & Y ports ISO 4401-05-05 NFPA T3.5.1-D05 Alt-A
5	L ports Proportional valves

Daman Products Company, Inc. • 1811 North Home Street • Mishawaka, IN 46545-7267
Tel: 800.959.7841 574.259.7841 • Fax: 800.241.7664 • Email: sales@daman.com • www.daman.com

D07 Standard Flow Parallel Circuit Manifold

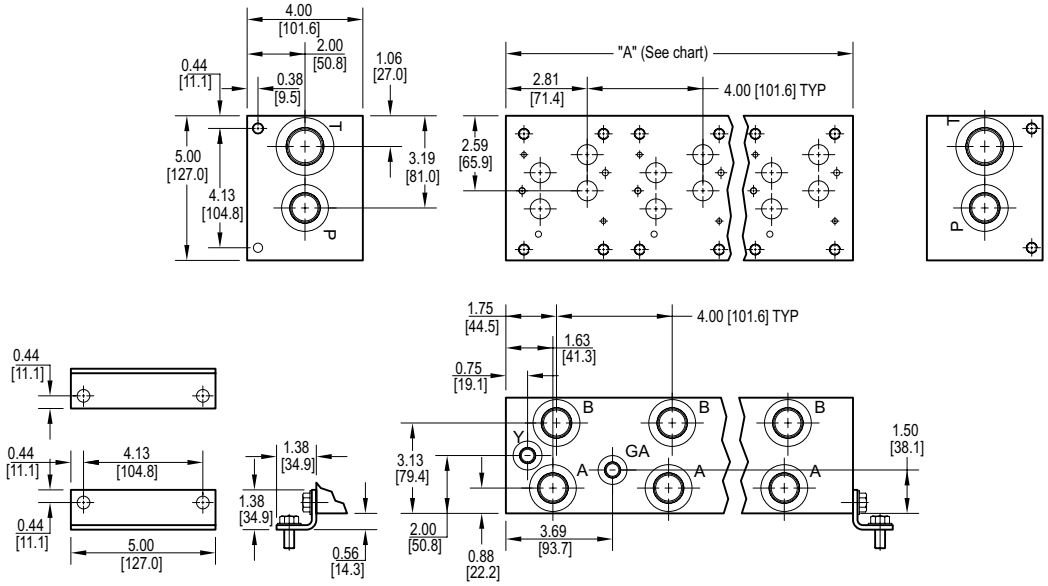

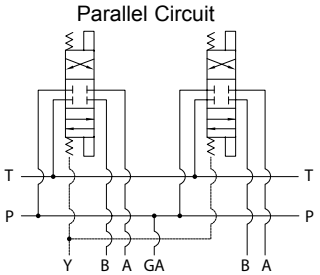

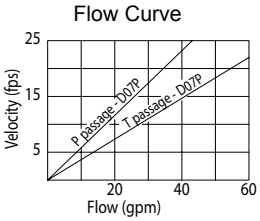

Rated flow Pressure 25 gpm @ 15 fps
Rated flow Tank 41 gpm @ 15 fps

All mounting hardware is supplied.
See page 65 for itemized list.

No. of stations	* 01	02	03	04	05	06	07	08
"A" length (code 4 spa.) inch [mm]	4.00 [101.6]	8.00 [203.2]	12.00 [304.8]	16.00 [406.4]	20.00 [508.0]	24.00 [609.6]	28.00 [711.2]	32.00 [812.8]
apx. weight alum lb [kg]	6 [3]	14 [6]	22 [10]	30 [14]	38 [17]	46 [21]	52 [24]	60 [27]
apx. weight ferrous lb [kg]	24 [11]	46 [21]	69 [31]	90 [41]	114 [52]	135 [61]	158 [72]	180 [82]

* Length of 01 sta. with "C" relief cavity 5.50 [139.7]. Gauge port not available on 01 station.

Port code	Valve mtg.	Manifold mtg.
P, S	0.38-16 UNC x 1.00 [25] DP 0.25-20 UNC x 0.75 [19] DP	0.38-16 UNC x 0.75 [19] DP
B, M, T	M10 ISO 6H x 1.00 [25] DP M6 ISO 6H x 0.75 [19] DP	M10 ISO 6H x 0.75 [19] DP

Specifications, descriptions, and dimensional data are subject to correction or change without notice or incurring obligation. Download latest catalog page revisions at www.daman.com.

Ordering Information

For **coating options** see pages 245-246.

Material	Valve Pattern	Circuit	No. of Stations	Valve Spacing	Port Threads	/	Options

Material

A	Aluminum - 6061-T6 3000† psi • 20.7 MPa
D	Ductile Iron - D4512 5000† psi • 34.5 MPa

† Working pressure should be considered in accordance with ISO 4413 to determine appropriate material type.

Circuit

P	Parallel Manifold Standard Flow

Valve Spacing

4	4.00 inch 101.6 mm

Options

See next page for available options and ordering codes.

Valve Pattern

D07	ISO 4401-07-06 NFPA T3.5.1-D07 See Tech Information

No. of Stations

Aluminum	
01...08	Available with spacing code 4
Ductile Iron	
01...08	Available with spacing code 4

Port Threads		P,A,B	T	Y	X optional	GA
P	NPTF • ANSI B1.20.3	0.75	1.00	0.38	0.25	0.25
S	SAE • ISO 11926	-12	-16	-6	-4	-6
B	BSPP • ISO 1179	0.75	1.00	0.38	0.25	none
M	ISO • ISO 6149	M27	M33	M14	M10	none
T	BSPT • ISO 7	0.75	1.00	0.38	0.25	none

Daman Products Company, Inc. • 1811 North Home Street • Mishawaka, IN 46545-7267
Tel: 800.959.7841 574.259.7841 • Fax: 800.241.7664 • Email: sales@daman.com • www.daman.com

Options - D07 Standard Flow Parallel Manifold

Contact Daman for cavity locations if critical.

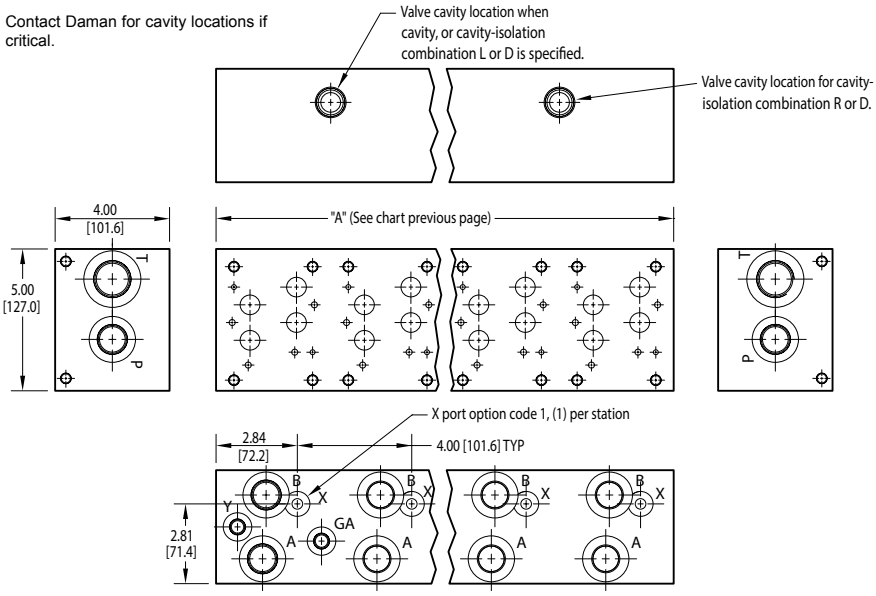

ISOLATIONS

Daman isolation options allow a manifold to have two independent pressure and/or tank ports. Isolations are drilled rather than plugged to ensure a leakproof and failproof isolation.

Ordering code letter:	* Isolation is between stations:	Available # of stations:
A	01 & 02	02-08
B	02 & 03	03-08
C	03 & 04	04-08
D	04 & 05	05-08
E	05 & 06	06-08
F	06 & 07	07-08
G	07 & 08	08

* Stations are numbered left to right.

Parallel Circuit with X

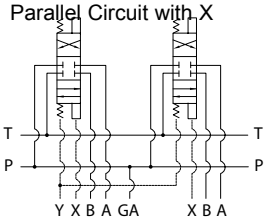

Parallel Circuit with Cavity

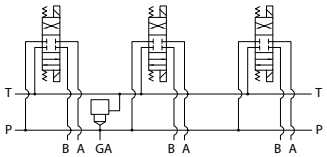

Valves with P in the nose and T out the side must be used.

Parallel Circuit with Isolations

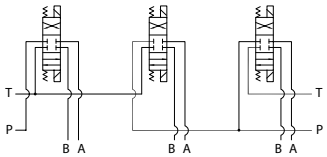

Manifold shown with P isolation between 1 & 2 (PA), and T isolation between 2 & 3 (TB).

Cavity & Isolation Combinations

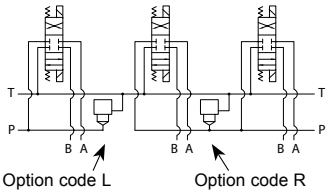

Option code L
Cavity left of isolation

Option code R
Cavity right of isolation

Option code D includes both cavities

NOTES:

1) The GA port is not available on a (1) station manifold.

2) The GA port is not available when a pressure isolation is located between stations 1 & 2.

3) Some cavity and isolation combinations are not possible. Consult factory to determine availablity.

Ordering Information

... /	Pilot Ports	Cavity	Pressure Isolation	Tank Isolation	Cavity & Isolation Combinations

Pilot Ports

Omit if X ports not required

1	X port ISO 4401-07-06 NFPA T3.5.1-D07

Cavity

Omit if cavity not required

C	Common cavity: With solenoid clearance. C-10-2 (P in nose) For valves w/1" hex max.
S	Sun Cavity T-3A (P in nose) See Tech Info for valves.

Pressure Isolation

Omit if P isolation not required

PA...PG	Available with spacing code 4

Tank Isolation

Omit if T isolation not required

TA...TG	Available with spacing code 4

Cavity & Isolation Combinations

Specify when using a combination of cavity and isolation options. Cavities do have solenoid clearance.

L	Relief cavity is located left of the isolation.
R	Relief cavity is located right of the isolation.
D	Two relief cavities, one each side of isolation.

Daman Products Company, Inc. • 1811 North Home Street • Mishawaka, IN 46545-7267
Tel: 800.959.7841 574.259.7841 • Fax: 800.241.7664 • Email: sales@daman.com • www.daman.com

D07 High Flow Parallel Circuit Manifold

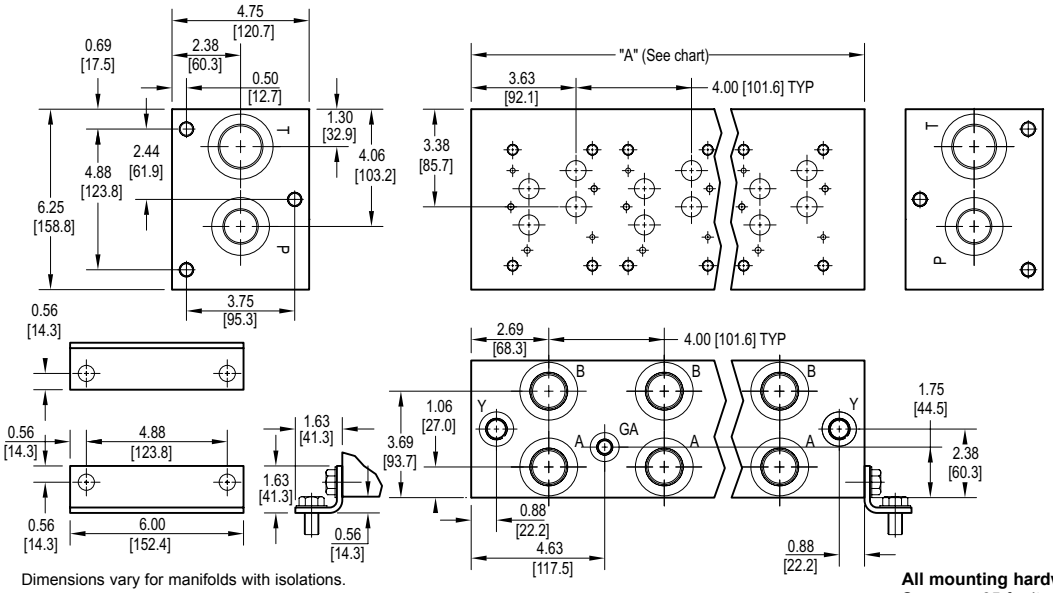

Dimensions vary for manifolds with isolations.

Parallel Circuit

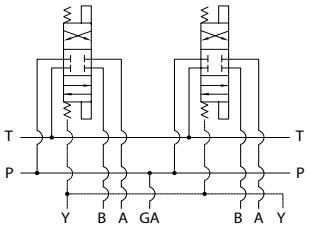

Flow Curve

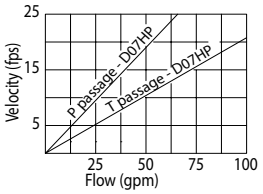

Rated flow Pressure 41 gpm @ 15 fps
Rated flow Tank 72 gpm @ 15 fps

All mounting hardware is supplied.
See page 65 for itemized list.

No. of stations	* 01	02	03	04	05	06	07	08
"A" length (code 4 spa.) inch [mm]	5.63 [142.9]	9.63 [244.5]	13.63 [346.1]	17.63 [447.7]	21.63 [549.3]	25.63 [650.9]	29.63 [752.5]	33.63 [854.1]
apx. weight alum lb [kg]	17 [8]	29 [13]	41 [18]	52 [24]	64 [29]	76 [35]	88 [40]	100 [45]
apx. weight ferrous lb [kg]	43 [20]	74 [34]	105 [47]	136 [62]	167 [76]	198 [90]	228 [103]	260 [118]

* Length of 01 station with Sun relief cavity 7.00 [177.8]. Length of 01 station with Common relief cavity 6.75 [171.5]. Gauge port not available on 01 station.

Port code	Valve mtg.	Manifold mtg.
P, S	0.38-16 UNC x 1.00 [25] DP 0.25-20 UNC x 0.75 [19] DP	0.50-13 UNC x 0.88 [22.3] DP
B, M, T	M10 ISO 6H x 1.00 [25] DP M6 ISO 6H x 0.75 [19] DP	M12 ISO 6H x 0.88 [22.3] DP

Specifications, descriptions, and dimensional data are subject to correction or change without notice or incurring obligation. Download latest catalog page revisions at www.daman.com.

Ordering Information

For **coating options** see pages 245-246.

Material	Valve Pattern	Circuit	No. of Stations	Valve Spacing	Port Threads	/	Options

Material

A	Aluminum - 6061-T6 3000† psi • 20.7 MPa
D	Ductile Iron - D4512 5000† psi • 34.5 MPa

† Working pressure should be considered in accordance with ISO 4413 to determine appropriate material type.

Circuit

HP	Parallel Circuit High Flow

Valve Spacing

4	4.00 inch 101.6 mm

Options

See next page for available options and ordering codes.

Valve Pattern

D07	ISO 4401-07-06 NFPA T3.5.1-D07 See Tech information

No. of Stations

Aluminum	
01...08	Available with spacing code 4
Ductile Iron	
01...08	Available with spacing code 4

Port Threads		P,A,B	T	Y	X optional	GA
P	NPTF • ANSI B1.20.3	1.00	1.25	0.50	0.25	0.25
S	SAE • ISO 11926	-16	-20	-8	-4	-6
B	BSPP • ISO 1179	1.00	1.25	0.50	0.25	none
M	ISO • ISO 6149	M33	M42	M16	M10	none
T	BSPT • ISO 7	1.00	1.25	0.50	0.25	none

Daman Products Company, Inc. • 1811 North Home Street • Mishawaka, IN 46545-7267
Tel: 800.959.7841 574.259.7841 • Fax: 800.241.7664 • Email: sales@daman.com • www.daman.com

Options - D07 High Flow Parallel Manifold

Contact Daman for cavity locations if critical.

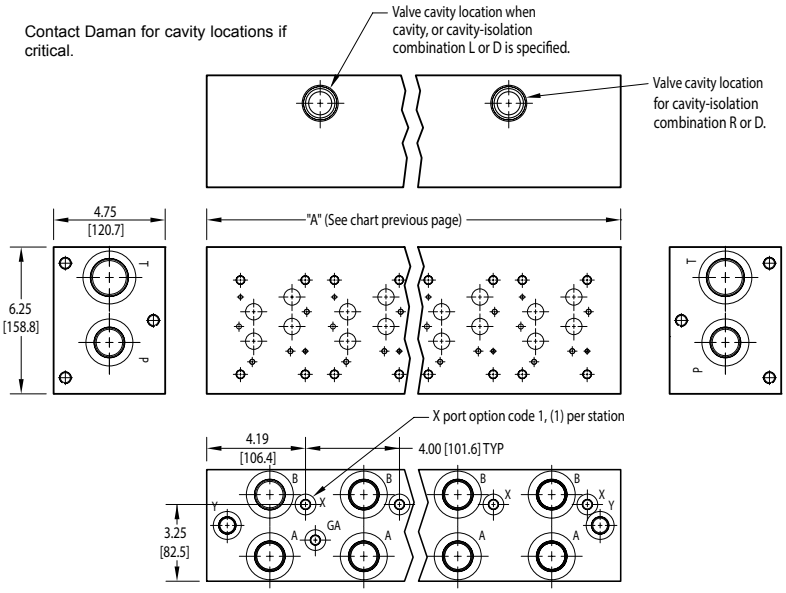

ISOLATIONS

Daman isolation options allow a manifold to have two independent pressure and/or tank ports. Isolations are drilled rather than plugged to ensure a leakproof and failproof isolation.

Ordering code letter:	* Isolation is between stations:	Available # of stations:
A	01 & 02	02-08
B	02 & 03	03-08
C	03 & 04	04-08
D	04 & 05	05-08
E	05 & 06	06-08
F	06 & 07	07-08
G	07 & 08	08

* Stations are numbered left to right.

Parallel circuit with X

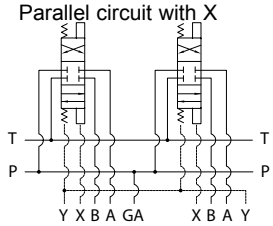

Parallel Circuit with Cavity

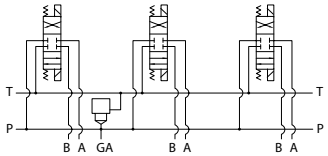

Valves with P in the nose and T out the side must be used.

Parallel Circuit with Isolations

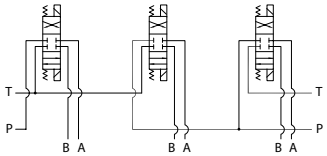

Manifold shown with P isolation between 1 & 2 (PA), and T isolation between 2 & 3 (TB).

Cavity & Isolation Combinations

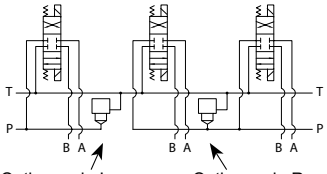

Option code L
Cavity left of isolation

Option code R
Cavity right of isolation

Option code D includes both cavities

NOTES:

1) The GA port is not available on a (1) station manifold.

2) The GA port is not available when a pressure isolation is located between stations 1 & 2.

3) Some cavity and isolation combinations are not possible. Consult factory to determine availablity.

Ordering Information

... /	Pilot Ports	Cavity	Pressure Isolation	Tank Isolation	Cavity & Isolation Combinations

Pilot Ports

Omit if X ports not required

1	X port ISO 4401-07-06 NFPA T3.5.1-D07

Cavity

Omit if relief not required

C	Common cavity: With solenoid clearance. C-16-2 (P in nose)
S	Sun Cavity: T-16A (P in nose) See Tech Info for valves.

Pressure Isolation

Omit if P isolation not required

PA...PG	Available with spacing code 4

Tank Isolation

Omit if T isolation not required

TA...TG	Available with spacing code 4

Cavity & Isolation Combinations

Specify when using a combination of cavity and isolation options. Cavities do have solenoid clearance.

L	Relief cavity is located left of the isolation.
R	Relief cavity is located right of the isolation.
D	Two relief cavities, one each side of isolation.

Daman Products Company, Inc. • 1811 North Home Street • Mishawaka, IN 46545-7267
Tel: 800.959.7841 574.259.7841 • Fax: 800.241.7664 • Email: sales@daman.com • www.daman.com

D07 High Flow Parallel Circuit Manifold - Flange Ports

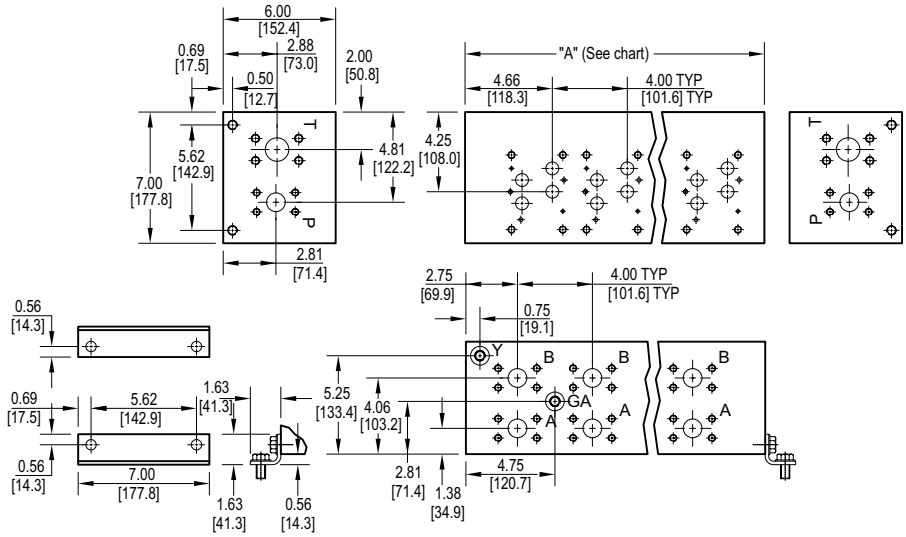

Parallel Circuit

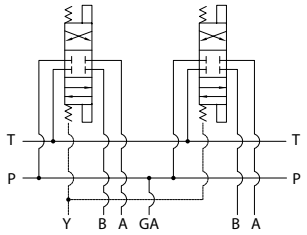

Flow Curve

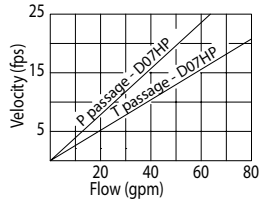

Rated flow Pressure 37 gpm @ 15 fps
Rated flow Tank 57 gpm @ 15 fps

No. of stations	* 01	02	03	04	05	06	07	08
"A" length inch [mm]	6.63 [168.3]	10.63 [269.9]	14.63 [371.5]	18.63 [473.1]	22.63 [574.7]	26.63 [676.3]	30.63 [777.9]	34.63 [879.5]
apx. weight alum lb [kg]	28 [12.6]	45 [20]	61 [28]	78 [36]	95 [43]	112 [51]	129 [59]	145 [66]
apx. weight ferrous lb [kg]	75 [34]	120 [55]	166 [75]	211 [96]	257 [116]	302 [137]	344 [156]	389 [176]

* Length of 01 station with relief cavity 7.13 [181.0]. Gauge port not available on 01 station.

All mounting hardware is supplied.
See page 65 for itemized list.

Port code	Valve mtg.	Manifold mtg.	Flange mtg.	GA Port	Y Port	X Port *
F	0.38-16 UNC x 1.00 [25] DP 0.25-20 UNC x 0.75 [19] DP	0.50-13 UNC x 0.88 [22] DP	ISO 6162 Type II - Inch	**-6** SAE J1926	**-6** SAE J1926	**-4** SAE J1926
F / M	M10 ISO 6H x 1.00 [25] DP M6 ISO 6H x 0.75 [19] DP	M12 ISO 6H x 0.88 [22] DP	ISO 6162 Type I - metric	NONE	**M14** ISO 6149	**M10** ISO 6149

* X port is optional. See options on next page.

Specifications, descriptions, and dimensional data are subject to correction or change without notice or incurring obligation.
Download latest catalog page revisions at www.daman.com.

Ordering Information

For **coating options** see pages 245-246.

Material	Valve Pattern	Circuit	No. of Stations	Valve Spacing	Port Threads	/	Options

Material

A	Aluminum - 6061-T6 3000† psi • 20.7 MPa
D	Ductile Iron - D4512 5000† psi • 34.5 MPa

† Working pressure should be considered in accordance with ISO 4413 to determine appropriate material type.

Circuit

HP	Parallel Circuit High Flow

Valve Spacing

4	4.00 inch 101.6 mm

Options

See next page for available options and ordering codes.

Valve Pattern

D07	ISO 4401-07-06 NFPA T3.5.1-D07 See Tech Information

No. of Stations

Aluminum or Ductile Iron	
01...08	Available with spacing code 4

Port Threads

		P,A,B	T
F	**CODE 61 4-Bolt Flange** SAE J518 - CODE 61 ISO 6162 - 2.5 to 35 MPa	1.00 CODE 61	1.25 CODE 61

Daman Products Company, Inc. • 1811 North Home Street • Mishawaka, IN 46545-7267
Tel: 800.959.7841 574.259.7841 • Fax: 800.241.7664 • Email: sales@daman.com • www.daman.com

Options - D07 High Flow Parallel Manifold - Flange Ports

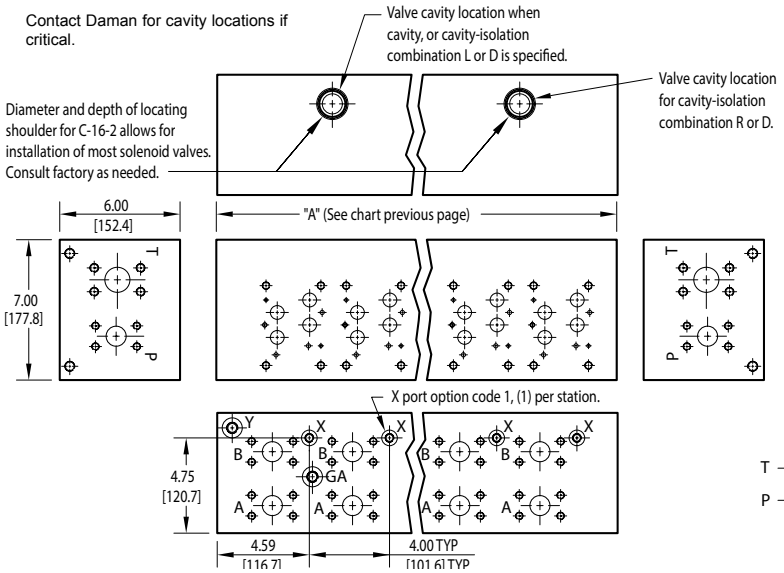

ISOLATIONS

Daman isolation options allow a manifold to have two independent pressure and/or tank ports. Isolations are drilled rather than plugged to ensure a leakproof and failproof isolation.

Ordering code letter:	* Isolation is between stations:	Available # of stations:
A	01 & 02	02-08
B	02 & 03	03-08
C	03 & 04	04-08
D	04 & 05	05-08
E	05 & 06	06-08
F	06 & 07	07-08
G	07 & 08	08

* Stations are numbered left to right.

Parallel circuit with X

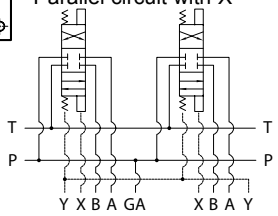

NOTES:

1) The GA port is not available on a (1) station manifold.

2) The GA port is not available when a pressure isolation is located between stations 1 & 2.

Parallel Circuit with Cavity

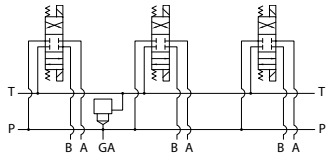

Valves with P in the nose and T out the side must be used.

Parallel Circuit with Isolations

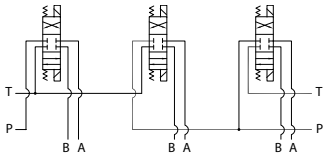

Manifold shown with P isolation between 1 & 2 (PA), and T isolation between 2 & 3 (TB).

Cavity & Isolation Combinations

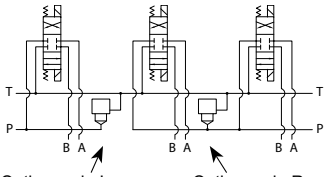

Option code L
Cavity left of isolation

Option code R
Cavity right of isolation

Option code D includes both cavities

Ordering Information

... /	Thread Type	Pilot Ports	Cavity	Pressure Isolation	Tank Isolation	Cavity & Isolation Combinations

Thread Type

Omit	Inch threads / ports
M	Metric threads / ports

Cavity

Omit if cavity not required

C	Common cavity: C-16-2 (P in nose)
S	Sun Cavity: T-16A (P in nose) See Tech Info for valves.

Tank Isolation

Omit if T isolation not required

TA...TG	Available with spacing code 4

Pilot Ports

Omit if X ports not required

1	X port ISO 4401-07-06 NFPA T3.5.1-D07

Pressure Isolation

Omit if P isolation not required

PA...PG	Available with spacing code 4

Cavity & Isolation Combinations

Specify when using a combination of cavity and isolation options. Cavities do not have solenoid clearance.

L	Relief cavity is located left of the isolation.
R	Relief cavity is located right of the isolation.
D	Two relief cavities, one each side of isolation.

Daman Products Company, Inc. • 1811 North Home Street • Mishawaka, IN 46545-7267
Tel: 800.959.7841 574.259.7841 • Fax: 800.241.7664 • Email: sales@daman.com • www.daman.com

D07 Series Circuit Manifold

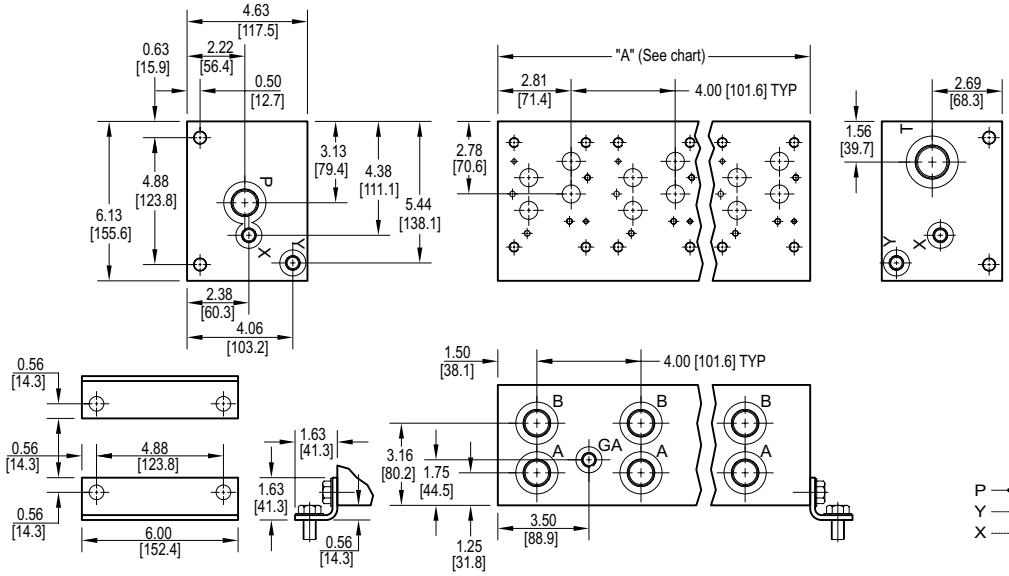

Series Circuit

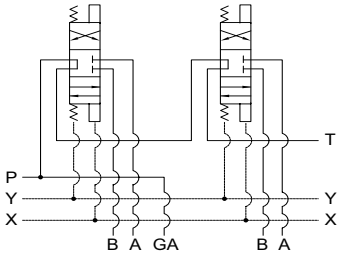

All mounting hardware is supplied.
See page 65 for itemized list.

No. of stations	02	03	04
"A" length (code 4 spa.) inch [mm]	8.00 [203.2]	12.00 [304.8]	16.00 [406.4]
apx. weight alum lb [kg]	23 [10]	32 [15]	40 [18]
apx. weight ferrous lb [kg]	68 [31]	103 [47]	137 [62]

Port code	Valve mtg.	Manifold mtg.
P, S	0.38-16 UNC x 1.00 [25] DP 0.25-20 UNC x 0.75 [19] DP	0.50-13 UNC x 0.88 [22.3] DP
B, M, T	M10 ISO 6H x 1.00 [25] DP M6 ISO 6H x 0.75 [19] DP	M12 ISO 6H x 0.88 [22.3] DP

Specifications, descriptions, and dimensional data are subject to correction or change without notice or incurring obligation. Download latest catalog page revisions at www.daman.com.

Ordering Information

For **coating options** see pages 245-246.

Material	Valve Pattern	Circuit	No. of Stations	Valve Spacing	Port Threads	/	Options

Material

A	Aluminum - 6061-T6 3000† psi • 20.7 MPa
D	Ductile Iron - D4512 5000† psi • 34.5 MPa

† Working pressure should be considered in accordance with ISO 4413 to determine appropriate material type.

Circuit

S	Series Circuit

Valve Spacing

4	4.00 inch 101.6 mm

Options

No options available.

Valve Pattern

D07	ISO 4401-07-06 NFPA T3.5.1-D07 See Tech Information

No. of Stations

Aluminum	
02...04	Available with spacing code 4
Ductile Iron	
02...04	Available with spacing code 4

Port Threads

		P,A,B	T	X & Y	GA
P	NPTF • ANSI B1.20.3	0.75	1.00	0.38	0.25
S	SAE • ISO 11926	-12	-16	-6	-6
B	BSPP • ISO 1179	0.75	1.00	0.38	none
M	ISO • ISO 6149	M27	M33	M14	none
T	BSPT • ISO 7	0.75	1.00	0.38	none

Daman Products Company, Inc. • 1811 North Home Street • Mishawaka, IN 46545-7267
Tel: 800.959.7841 574.259.7841 • Fax: 800.241.7664 • Email: sales@daman.com • www.daman.com

D08 Manifolds ☞

Daman Products Company, Inc. • 1811 North Home Street • Mishawaka, IN 46545-7267
Tel: 800.959.7841 574.259.7841 • Fax: 800.241.7664 • Email: sales@daman.com • www.daman.com

D08 Standard Flow Parallel Manifold

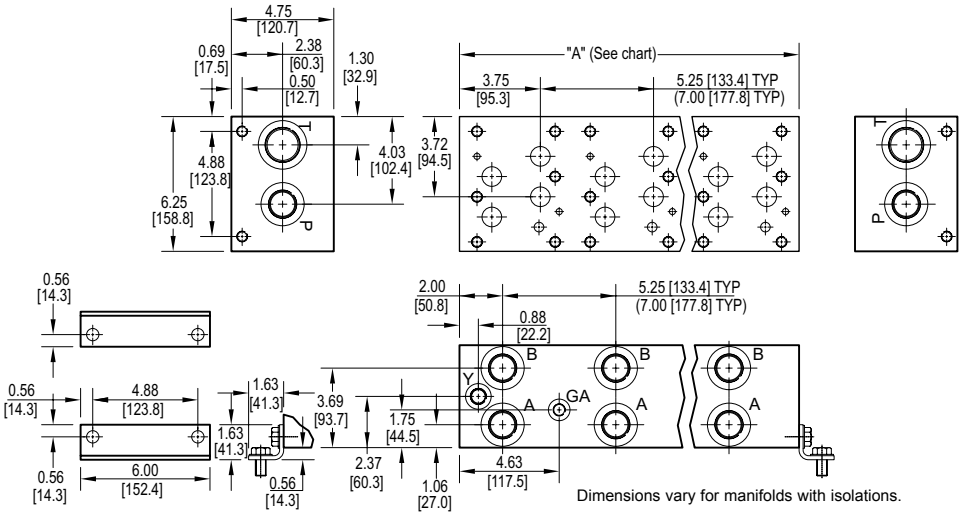

Dimensions vary for manifolds with isolations.

Parallel Circuit

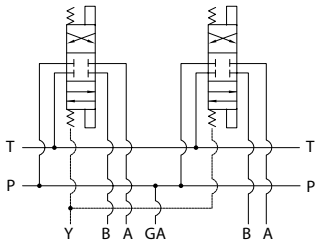

Flow Curve

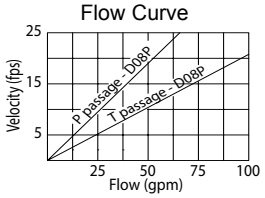

Rated flow Pressure 41 gpm @ 15 fps
Rated flow Tank 72 gpm @ 15 fps

No. of stations	* 01	02	03	04	05	06	07	08
"A" length (code 5 spa.) inch [mm]	5.25 [133.4]	10.50 [266.7]	15.75 [400.1]	21.00 [533.4]	26.25 [666.8]	31.50 [800.1]	36.75 [933.5]	42.00 [1066.8]
apx. weight alum lb [kg]	12 [5]	24 [11]	35 [16]	49 [22]	61 [28]	75 [34]	89 [40]	102 [46]
apx. weight ferrous lb [kg]	45 [20]	90 [41]	136 [62]	181 [82]	226 [103]	271 [123]	316 [143]	362 [164]
"A" length (code 7 spa.) inch [mm]	--	12.25 [311.2]	19.25 [489.0]	26.25 [666.8]	33.25 [844.6]			
apx. weight alum lb [kg]	--	28 [13]	44 [20]	60 [27]	76 [34]			
apx. weight ferrous lb [kg]	--	105 [48]	166 [75]	226 [103]	286 [130]			

* Gauge port not available on 01 station.

All mounting hardware is supplied.
See page 65 for itemized list.

Port code	Valve mtg.	Manifold mtg.
P, S	0.50-13 UNC x 1.19 [30] DP	0.50-13 UNC x 0.88 [22.3] DP
B, M, T	M12 ISO 6H x 1.19 [30] DP	M12 ISO 6H x 0.88 [22.3] DP

Specifications, descriptions, and dimensional data are subject to correction or change without notice or incurring obligation.
Download latest catalog page revisions at www.daman.com.

Ordering Information

For **coating options** see pages 245-246.

Material	Valve Pattern	Circuit	No. of Stations	Valve Spacing	Port Threads	/	Options

Material

A	Aluminum - 6061-T6 3000† psi • 20.7 MPa
D	Ductile Iron - D4512 5000† psi • 34.5 MPa

† Working pressure should be considered in accordance with ISO 4413 to determine appropriate material type.

Circuit

P	Parallel Circuit Standard Flow

Valve Spacing

5	5.25 inch 133.4 mm
7	7.00 inch 177.8 mm

Options

See next page for available options and ordering codes.

Valve Pattern

D08	ISO 4401-08-07 NFPA T3.5.1-D08 See Tech Information

No. of Stations

Aluminum	
01...08	Available with spacing code 5
02...05	Available with spacing code 7
Ductile Iron	
01...08	Available with spacing code 5
02...05	Available with spacing code 7

Port Threads

		P,A,B	T	Y	X optional	GA
P	NPTF • ANSI B1.20.3	1.00	1.25	0.38	0.25	0.25
S	SAE • ISO 11926	-16	-20	-8	-4	-6
B	BSPP • ISO 1179	1.00	1.25	0.38	0.25	none
M	ISO • ISO 6149	M33	M42	M14	M10	none
T	BSPT • ISO 7	1.00	1.25	0.38	0.25	none

Daman Products Company, Inc. • 1811 North Home Street • Mishawaka, IN 46545-7267
Tel: 800.959.7841 574.259.7841 • Fax: 800.241.7664 • Email: sales@daman.com • www.daman.com

Options - D08 Standard Flow Parallel Manifold

Contact Daman for cavity locations if critical.

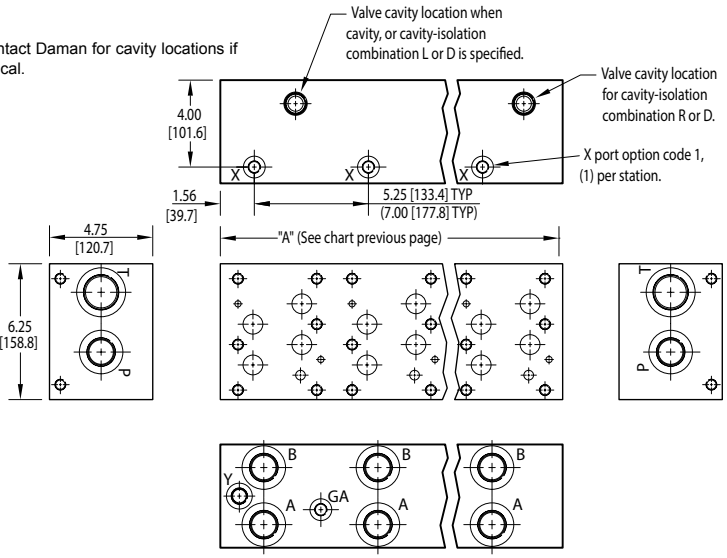

Parallel Circuit with X

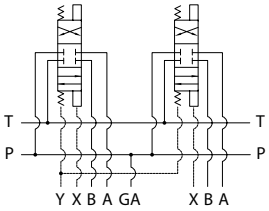

ISOLATIONS

Daman isolation options allow a manifold to have two independent pressure and/or tank ports. Isolations are drilled rather than plugged to ensure a leakproof and failproof isolation.

Ordering code letter:	* Isolation is between stations:	Available # of stations:
5.25 [133.4] spacing		
A	01 & 02	02-08
B	02 & 03	03-08
C	03 & 04	04-08
D	04 & 05	05-08
E	05 & 06	06-08
F	06 & 07	07-08
G	07 & 08	08
7.00 [177.8] spacing		
A	01 & 02	02-05
B	02 & 03	03-05
C	03 & 04	04-05
D	04 & 05	05

* Stations are numbered left to right.

Parallel Circuit with Cavity

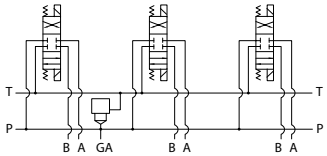

Valves with P in the nose and T out the side must be used.

Parallel Circuit with Isolations

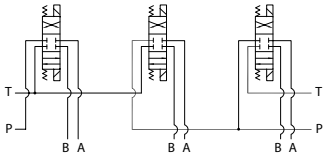

Manifold shown with P isolation between 1 & 2 (PA), and T isolation between 2 & 3 (TB).

Cavity & Isolation Combinations

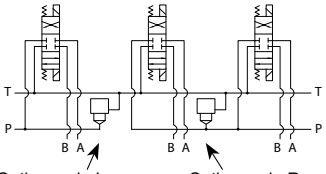

Option code L
Cavity left of isolation

Option code R
Cavity right of isolation

Option code D includes both cavities

NOTES:

1) The GA port is not available on a (1) station manifold.

2) The GA port is not available when a pressure isolation is located between stations 1 & 2.

Ordering Information

... /	Pilot Ports	Cavity	Pressure Isolation	Tank Isolation	Cavity & Isolation Combinations

Pilot Ports

Omit if X ports not required	
1	X port ISO 4401-08-07 NFPA T3.5.1-D08

Cavity

Omit if cavity not required	
C	Common cavity: With solenoid clearance. C-10-2 (P in nose) For valves w/1" hex max.
S	Sun Cavity T-3A (P in nose) See Tech Info for valves.

Pressure Isolation

Omit if P isolation not required	
PA...PG	Available with spacing code 5
PA...PD	Available with spacing code 7

Tank Isolation

Omit if T isolation not required	
TA...TG	Available with spacing code 5
TA...TD	Available with spacing code 7

Cavity & Isolation Combinations

Specify when using a combination of cavity and isolation options. Cavities do have solenoid clearance.	
L	Relief cavity is located left of the isolation.
R	Relief cavity is located right of the isolation.
D	Two relief cavities, one each side of isolation.

Daman Products Company, Inc. • 1811 North Home Street • Mishawaka, IN 46545-7267
Tel: 800.959.7841 574.259.7841 • Fax: 800.241.7664 • Email: sales@daman.com • www.daman.com

D08 High Flow Parallel Circuit Manifold

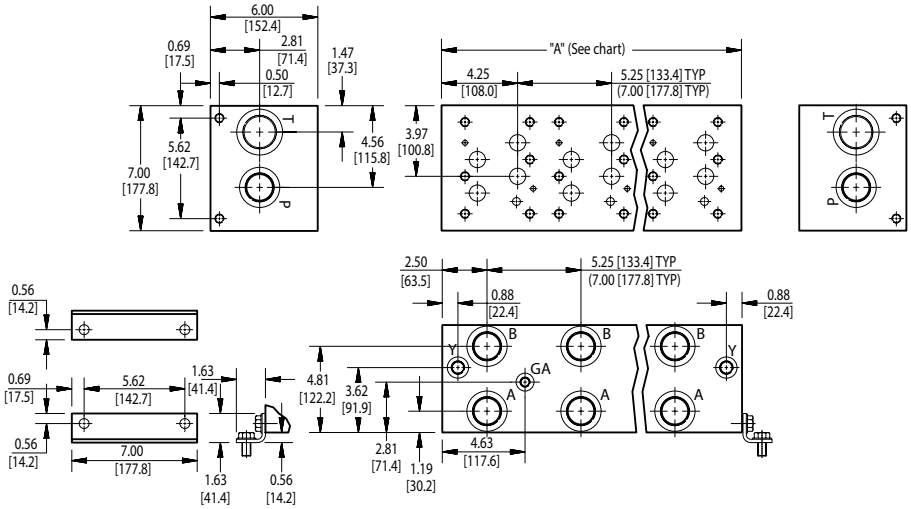

Parallel Circuit

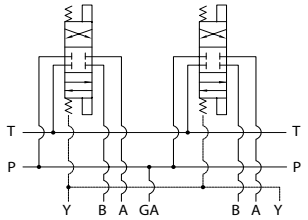

Flow Curve

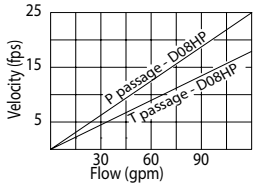

Rated flow Pressure 72 gpm @ 15 fps
Rated flow Tank 100 gpm @ 15 fps

No. of stations	* 01	02	03	04	05	06	07
"A" length (code 5 spa.) inch [mm]	6.25 [158.8]	11.50 [292.1]	16.75 [425.5]	22.00 [558.8]	27.25 [692.2]	32.50 [825.5]	37.75 [958.9]
apx. weight alum lb [kg]	26 [12]	48 [22]	70 [32]	92 [42]	114 [52]	136 [62]	158 [72]
apx. weight ferrous lb [kg]	69 [31]	126 [57]	183 [83]	240 [109]	298 [135]	355 [161]	412 [187]
"A" length (code 7 spa.) inch [mm]	--	13.25 [336.6]	20.25 [514.4]	27.25 [692.2]	34.25 [870.0]	41.25 [1047.8]	
apx. weight alum lb [kg]	--	55 [25]	85 [39]	114 [52]	143 [65]	173 [78]	
apx. weight ferrous lb [kg]	--	145 [66]	221 [100]	298 [135]	374 [170]	450 [204]	

* Gauge port not available on 01 station.

All mounting hardware is supplied.
See page 65 for itemized list.

Port code	Valve mtg.	Manifold mtg.
P, S	0.50-13 UNC x 1.19 [30] DP	0.50-13 UNC x 0.88 [22.3] DP
B, M, T	M12 ISO 6H x 1.19 [30] DP	M12 ISO 6H x 0.88 [22.3] DP

Specifications, descriptions, and dimensional data are subject to correction or change without notice or incurring obligation.
Download latest catalog page revisions at www.daman.com.

Ordering Information

For **coating options** see pages 245-246.

Material	Valve Pattern	Circuit	No. of Stations	Valve Spacing	Port Threads	/	Options

Material

A	Aluminum - 6061-T6 3000† psi • 20.7 MPa
D	Ductile Iron - D4512 5000† psi • 34.5 MPa

† Working pressure should be considered in accordance with ISO 4413 to determine appropriate material type.

Circuit

HP	Parallel Circuit High Flow

Valve Spacing

5	5.25 inch 133.4 mm
7	7.00 inch 177.8 mm

Options

See next page for available options and ordering codes.

Valve Pattern

D08	ISO 4401-08-07 NFPA T3.5.1-D08 See Tech Information

No. of Stations

Aluminum	
01...07	Available with spacing code 5
02...06	Available with spacing code 7
Ductile Iron	
01...07	Available with spacing code 5
02...05	Available with spacing code 7

Port Threads

		P,A,B	T	Y	X optional	GA
P	NPTF • ANSI B1.20.3	1.25	1.50	0.38	0.25	0.25
S	SAE • ISO 11926	-20	-24	-8	-4	-6
B	BSPP • ISO 1179	1.25	1.50	0.50	0.25	none
M	ISO • ISO 6149	M42	M48	M16	M10	none
T	BSPT • ISO 7	1.25	1.50	0.50	0.25	none

Daman Products Company, Inc. • 1811 North Home Street • Mishawaka, IN 46545-7267
Tel: 800.959.7841 574.259.7841 • Fax: 800.241.7664 • Email: sales@daman.com • www.daman.com

Options - D08 High Flow Parallel Manifold

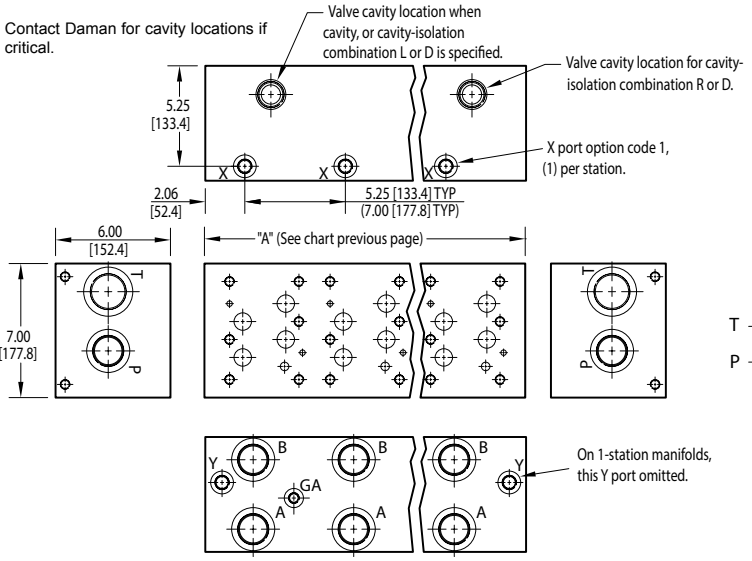

Parallel Circuit with X

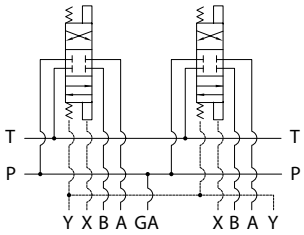

ISOLATIONS

Daman isolation options allow a manifold to have two independent pressure and/or tank ports. Isolations are drilled rather than plugged to ensure a leakproof and failproof isolation.

Ordering code letter:	* Isolation is between stations:	Available # of stations:
5.25 [133.4] spacing		
A	01 & 02	02-07
B	02 & 03	03-07
C	03 & 04	04-07
D	04 & 05	05-07
E	05 & 06	06-07
F	06 & 07	07
7.00 [177.8] spacing		
A	01 & 02	02-06
B	02 & 03	03-06
C	03 & 04	04-06
D	04 & 05	05-06
E	05 & 06	06

* Stations are numbered left to right.

Parallel Circuit with Cavity

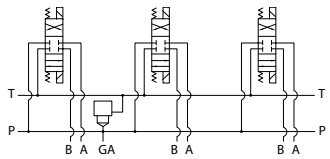

Valves with P in the nose and T out the side must be used.

Parallel Circuit with Isolations

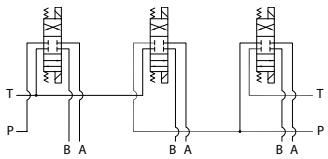

Manifold shown with P isolation between 1 & 2 (PA), and T isolation between 2 & 3 (TB).

Cavity & Isolation Combinations

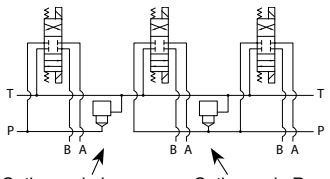

Option code L
Cavity left of isolation

Option code R
Cavity right of isolation

Option code D includes both cavities

NOTES:

1) The GA port is not available on a (1) station manifold.

2) The GA port is not available when a pressure isolation is located between stations 1 & 2.

Ordering Information

... /	Pilot Ports	Cavity	Pressure Isolation	Tank Isolation	Cavity & Isolation Combinations

Pilot Ports

Omit if X ports not required	
1	X port ISO 4401-08-07 NFPA T3.5.1-D08

Cavity

Omit if cavity not required	
C	Common cavity: With solenoid clearance C-16-2 (P in nose)
S	Sun Cavity: T-16A (P in nose) See Tech Info for valves.

Pressure Isolation

Omit if P isolation not required	
PA...PF	Available with spacing code 5
PA...PE	Available with spacing code 7

Tank Isolation

Omit if T isolation not required	
TA...TF	Available with spacing code 5
TA...TE	Available with spacing code 7

Cavity & Isolation Combinations

Specify when using a combination of cavity and isolation options. Cavities do have solenoid clearance.	
L	Relief cavity is located left of the isolation.
R	Relief cavity is located right of the isolation.
D	Two relief cavities, one each side of isolation.

Daman Products Company, Inc. • 1811 North Home Street • Mishawaka, IN 46545-7267
Tel: 800.959.7841 574.259.7841 • Fax: 800.241.7664 • Email: sales@daman.com • www.daman.com

D08 High Flow Parallel Circuit Manifold - Flange Ports

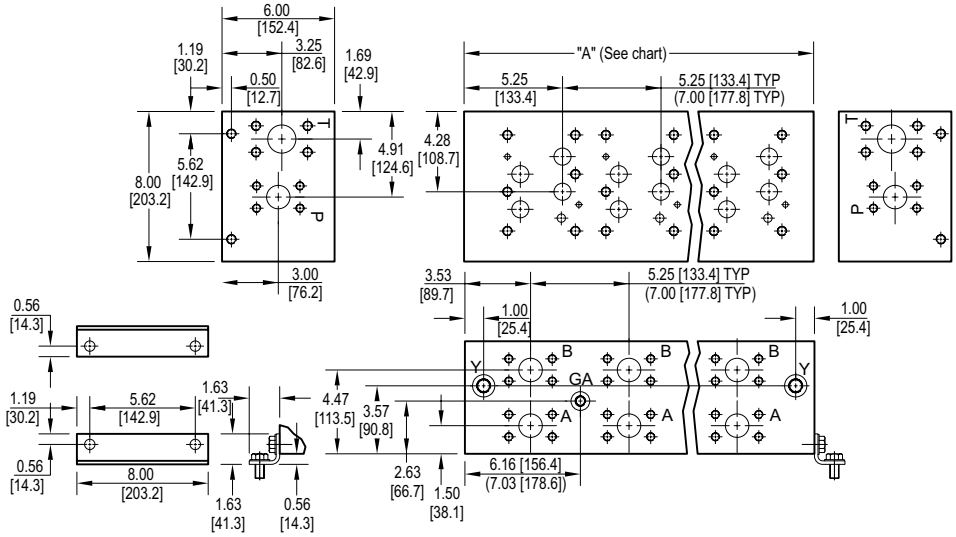

Parallel Circuit

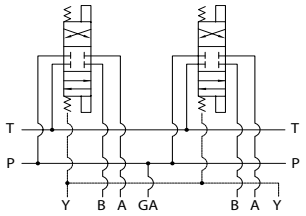

Flow Curve

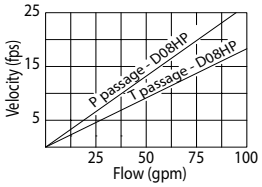

Rated flow Pressure 57 gpm @ 15 fps
Rated flow Tank 83 gpm @ 15 fps

No. of stations	01	02	03	04	05	06	07
"A" length (code 5 spa.) inch [mm]	7.63 [193.7]	12.88 [327.0]	18.13 [460.4]	23.38 [593.7]	28.63 [727.1]	33.88 [860.4]	39.13 [993.8]
apx. weight alum lb [kg]	37 [16.6]	62 [28]	87 [40]	112 [51]	137 [62]	163 [74]	188 [85]
apx. weight ferrous lb [kg]	99 [45]	167 [76]	235 [107]	303 [137]	371 [168]	439 [199]	507 [230]
"A" length (code 7 spa.) inch [mm]	--	14.63 [371.5]	21.63 [549.3]	28.63 [727.1]	35.63 [904.9]	42.63 [1082.7]	
apx. weight alum lb [kg]	--	70 [32]	104 [47]	137 [62]	171 [78]	204 [93]	
apx. weight ferrous lb [kg]	--	190 [86]	280 [127]	371 [168]	462 [210]	552 [250]	

All mounting hardware is supplied.
See page 65 for itemized list.

Port code	Valve mtg.	Manifold mtg.	Flange mtg.	GA port	Y port	X port *
F	0.50-13 UNC x 1.19 [30] DP	0.50-13 UNC x 0.88 [22] DP	ISO 6162 Type II - Inch	**-6** SAE J1926	**-8** SAE J1926	**-4** SAE J1926
F / M	M12 ISO 6H x 1.19 [30] DP	M12 ISO 6H x 0.88 [22] DP	ISO 6162 Type I - metric	NONE	**M16** ISO 6149	**M10** ISO 6149

* X port is optional. See options on next page.

Specifications, descriptions, and dimensional data are subject to correction or change without notice or incurring obligation.
Download latest catalog page revisions at www.daman.com.

Ordering Information

For **coating options** see pages 245-246.

Material	Valve Pattern	Circuit	No. of Stations	Valve Spacing	Port Threads	/	Options

Material

A	Aluminum - 6061-T6 3000† psi • 20.7 MPa
D	Ductile Iron - D4512 5000† psi • 34.5 MPa

† Working pressure should be considered in accordance with ISO 4413 to determine appropriate material type.

Circuit

HP	Parallel Circuit High Flow

Valve Spacing

5	5.25 inch 133.4 mm
7	7.00 inch 177.8 mm

Options

See next page for available options and ordering codes.

Valve Pattern

D08	ISO 4401-08-07 NFPA T3.5.1-D08 See Tech Information

No. of Stations

Aluminum	
01...07	Available with spacing code 5
02...06	Available with spacing code 7
Ductile Iron	
01...07	Available with spacing code 5
02...06	Available with spacing code 7

Port Threads		P,A,B	T
F	**CODE 61 4-Bolt Flange** SAE J518 - CODE 61 ISO 6162 - 2.5 to 35 MPa	1.25 CODE 61	1.50 CODE 61

Daman Products Company, Inc. • 1811 North Home Street • Mishawaka, IN 46545-7267
Tel: 800.959.7841 574.259.7841 • Fax: 800.241.7664 • Email: sales@daman.com • www.daman.com

Options - D08 High Flow Parallel Manifold - Flange Ports

Contact Daman for cavity locations if critical.

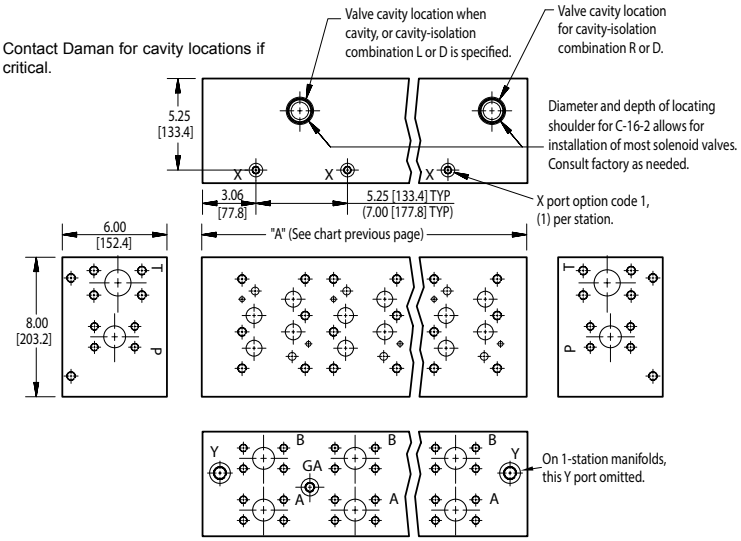

Parallel Circuit with X

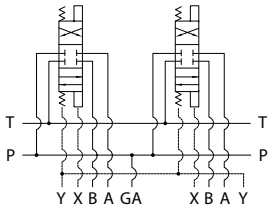

ISOLATIONS

Daman isolation options allow a manifold to have two independent pressure and/or tank ports. Isolations are drilled rather than plugged to ensure a leakproof and failproof isolation.

Ordering code letter:	* Isolation is between stations:	Available # of stations:
5.25 [133.4] spacing		
A	01 & 02	02-07
B	02 & 03	03-07
C	03 & 04	04-07
D	04 & 05	05-07
E	05 & 06	06-07
F	06 & 07	07
7.00 [177.8] spacing		
A	01 & 02	02-06
B	02 & 03	03-06
C	03 & 04	04-06
D	04 & 05	05-06
E	05 & 06	06

* Stations are numbered left to right.

Parallel Circuit with Cavity

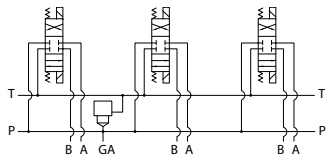

Valves with P in the nose and T out the side must be used.

Parallel Circuit with Isolations

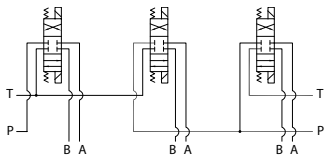

Manifold shown with P isolation between 1 & 2 (PA), and T isolation between 2 & 3 (TB).

Cavity & Isolation Combinations

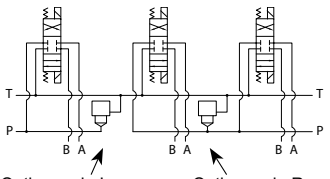

Option code L
Cavity left of isolation

Option code R
Cavity right of isolation

Option code D includes both cavities

NOTES:

1) The GA port is not available when a pressure isolation is located between stations 1 & 2.

Ordering Information

... /	Thread Type	Pilot Ports	Cavity	Pressure Isolation	Tank Isolation	Cavity & Isolation Combinations

Thread Type

Omit	Inch threads / ports
M	Metric threads / ports

Cavity

Omit if cavity not required

C	Common cavity: C-16-2 (P in nose)
S	Sun Cavity: T-16A (P in nose) See Tech Info for valves.

Tank Isolation

Omit if T isolation not required

TA...TF	Available with spacing code 5
TA...TE	Available with spacing code 7

Relief / Isolation Combinations

Specify when using a combination of cavity and isolation options. Cavities do not have solenoid clearance.

L	Relief cavity is located left of the isolation.
R	Relief cavity is located right of the isolation.
D	Two relief cavities, one each side of isolation.

Pilot Ports

Omit if X ports not required

1	X port ISO 4401-08-07 NFPA T3.5.1-D08

Pressure Isolation

Omit if P isolation not required

PA...PF	Available with spacing code 5
PA...PE	Available with spacing code 7

Daman Products Company, Inc. • 1811 North Home Street • Mishawaka, IN 46545-7267
Tel: 800.959.7841 574.259.7841 • Fax: 800.241.7664 • Email: sales@daman.com • www.daman.com

D08 Series Circuit Manifold

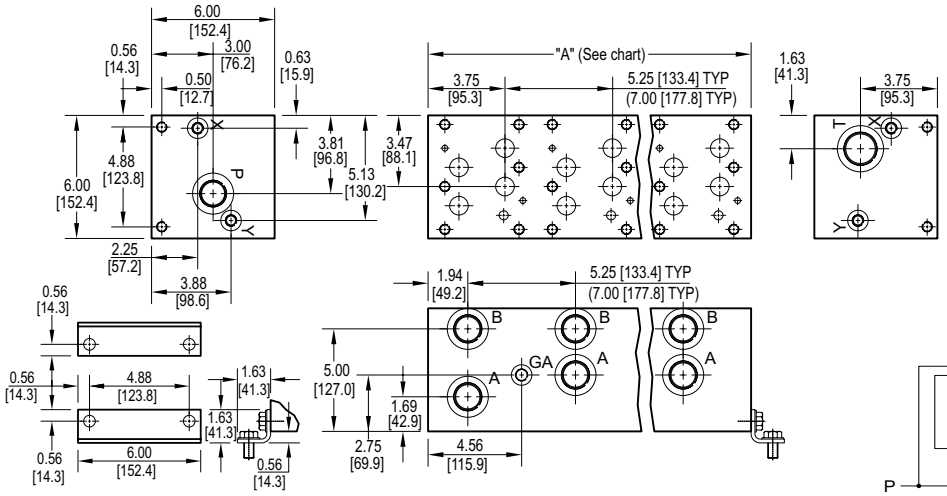

Series Circuit

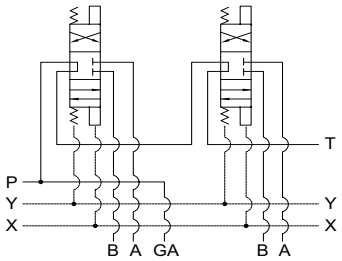

No. of stations	02	03
"A" length (code 5 spa.) inch [mm]	10.50 [266.7]	15.75 [400.1]
apx. weight alum lb [kg]	37 [17]	51 [23]
apx. weight ferrous lb [kg]	109 [49]	164 [74]
"A" length (code 7 spa.) inch [mm]	12.25 [311.2]	19.25 [489.0]
apx. weight alum lb [kg]	51 [23]	63 [29]
apx. weight ferrous lb [kg]	127 [58]	200 [91]

All mounting hardware is supplied.
See page 65 for itemized list.

Port code	Valve mtg.	Manifold mtg.
P, S	0.50-13 UNC x 1.19 [30] DP	0.50-13 UNC x 0.88 [22.3] DP
B, M, T	M12 ISO 6H x 1.19 [30] DP	M12 ISO 6H x 0.88 [22.3] DP

Specifications, descriptions, and dimensional data are subject to correction or change without notice or incurring obligation.
Download latest catalog page revisions at www.daman.com.

Ordering Information

For **coating options** see pages 245-246.

Material	Valve Pattern	Circuit	No. of Stations	Valve Spacing	Port Threads	/	Options

Material

A	Aluminum - 6061-T6 3000† psi • 20.7 MPa
D	Ductile Iron - D4512 5000† psi • 34.5 MPa

† Working pressure should be considered in accordance with ISO 4413 to determine appropriate material type.

Circuit

S	Series Circuit

Valve Spacing

5	5.25 inch 133.4 mm
7	7.00 inch 177.8 mm

Options

No options available.

Valve Pattern

D08	ISO 4401-08-07 NFPA T3.5.1-D08 See Tech Information

No. of Stations

Aluminum	
02...03	Available with spacing code 5
02...03	Available with spacing code 7
Ductile Iron	
02...03	Available with spacing code 5
02...03	Available with spacing code 7

Port Threads

		P,A,B	T	X & Y	GA
P	NPTF • ANSI B1.20.3	1.00	1.25	0.38	0.25
S	SAE • ISO 11926	-16	-20	-6	-6
B	BSPP • ISO 1179	1.00	1.25	0.38	none
M	ISO • ISO 6149	M33	M42	M14	none
T	BSPT • ISO 7	1.00	1.25	0.38	none

Daman Products Company, Inc. • 1811 North Home Street • Mishawaka, IN 46545-7267
Tel: 800.959.7841 574.259.7841 • Fax: 800.241.7664 • Email: sales@daman.com • www.daman.com

D10 Manifolds ☞

Daman Products Company, Inc. • 1811 North Home Street • Mishawaka, IN 46545-7267
Tel: 800.959.7841 574.259.7841 • Fax: 800.241.7664 • Email: sales@daman.com • www.daman.com

D10 Parallel Circuit Manifold - Flange Ports

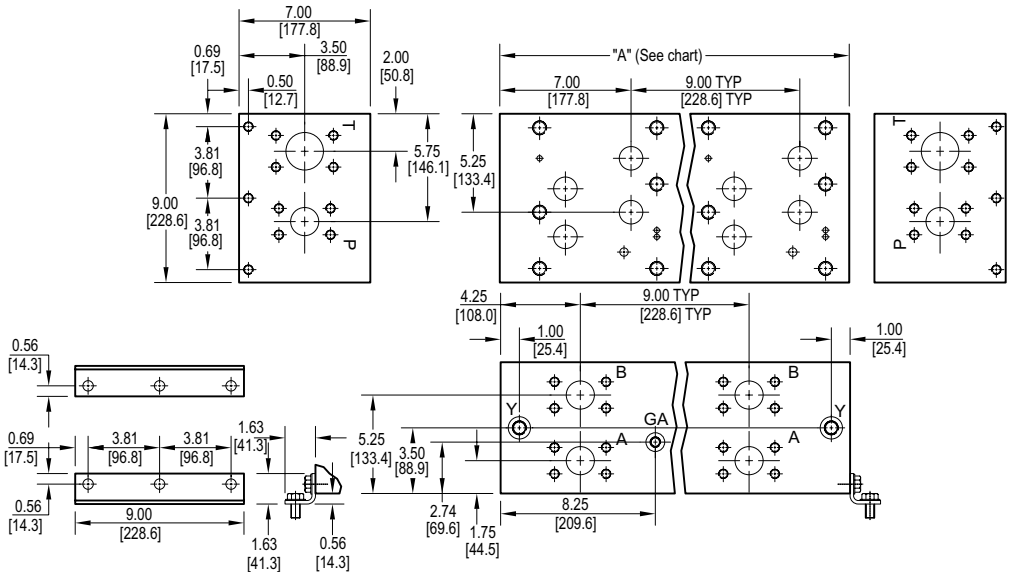

Parallel Circuit

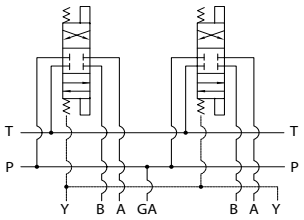

Flow Curve

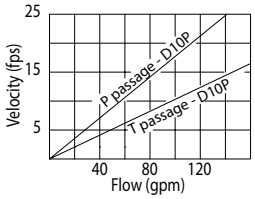

Rated flow Pressure 83 gpm @ 15 fps
Rated flow Tank 147 gpm @ 15 fps

No. of stations	01	02	03	04	05
"A" length inch [mm]	10.00 [254.0]	19.00 [482.6]	28.00 [711.2]	37.00 [939.8]	46.00 [1168.4]
apx. weight alum lb [kg]	63 [29]	120 [54]	176 [80]	233 [106]	290 [132]
apx. weight ferrous lb [kg]	170 [77]	323 [147]	476 [216]	629 [285	

All mounting hardware is supplied.
See page 65 for itemized list.

Port code	Valve mtg.	Manifold mtg.	Flange mtg.	GA port	Y port	X port
F	0.75-10 UNC x 1.63 [41] DP	0.50-13 UNC x 0.88 [22] DP	ISO 6162 Type II - Inch	**-6** SAE J1926	**-8** SAE J1926	**-6** SAE J1926
F / M	M20 ISO 6H x 1.63 [41] DP	M12 ISO 6H x 0.88 [22] DP	ISO 6162 Type I - metric	NONE	**M16** ISO 6149	**M14** ISO 6149

* X port is optional. See options on next page.

Specifications, descriptions, and dimensional data are subject to correction or change without notice or incurring obligation.
Download latest catalog page revisions at www.daman.com.

Ordering Information

For **coating options** see pages 245-246.

Material	Valve Pattern	Circuit	No. of Stations	Valve Spacing	Port Threads	/	Options

Material

A	Aluminum - 6061-T6 3000† psi • 20.7 MPa
D	Ductile Iron - D4512 5000† psi • 34.5 MPa

† Working pressure should be considered in accordance with ISO 4413 to determine appropriate material type.

Circuit

P	Parallel Circuit Standard Flow

Valve Spacing

9	9.00 inch 228.6 mm

Options

See next page for available options and ordering codes.

Valve Pattern

D10	ISO 4401-10-08 NFPA T3.5.1-D10 See Tech Information

No. of Stations

Aluminum	
01...05	Available with spacing code 9
Ductile Iron	
01...04	Available with spacing code 9

Port Threads

		P,A,B	T
F	**CODE 61 4-Bolt Flange** SAE J518 - CODE 61 ISO 6162 - 2.5 to 35 MPa	1.50 CODE 61	2.00 CODE 61

Daman Products Company, Inc. • 1811 North Home Street • Mishawaka, IN 46545-7267
Tel: 800.959.7841 574.259.7841 • Fax: 800.241.7664 • Email: sales@daman.com • www.daman.com

Options - D10 Parallel Manifold - Flange Ports

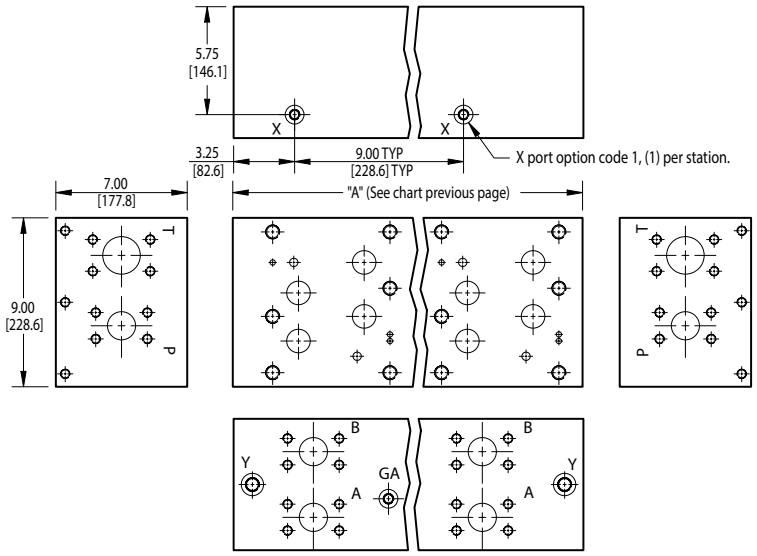

ISOLATIONS

Daman isolation options allow a manifold to have two independent pressure and/or tank ports. Isolations are drilled rather than plugged to ensure a leakproof and failproof isolation.

Ordering code letter:	* Isolation is between stations:	Available # of stations:
A	01 & 02	02-05
B	02 & 03	03-05
C	03 & 04	04-05
D	04 & 05	05

* Stations are numbered left to right.

Parallel Circuit with X

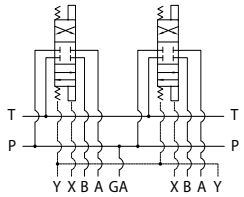

Parallel Circuit with Isolations

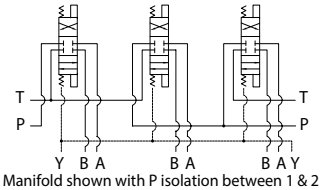

Manifold shown with P isolation between 1 & 2 (PA), and T isolation between 2 & 3 (TB).

Ordering Information

... /	Thread Type	Pilot Ports	Pressure Isolation	Tank Isolation

Thread Type

Omit	Inch threads / ports
M	Metric threads / ports

Pressure Isolation

Omit if P isolation not required

PA...PD	Available with spacing code 9

Tank Isolation

Omit if T isolation not required

TA...TD	Available with spacing code 9

Pilot Ports

Omit if X ports not required

1	X port ISO 4401-10-08 NFPA T3.5.1-D10

Daman Products Company, Inc. • 1811 North Home Street • Mishawaka, IN 46545-7267
Tel: 800.959.7841 574.259.7841 • Fax: 800.241.7664 • Email: sales@daman.com • www.daman.com

D03 FlexMount Parallel Circuit Manifold

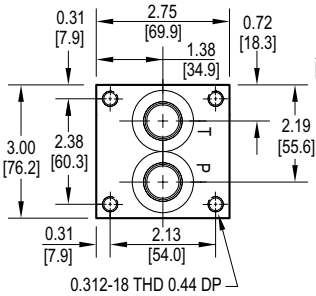

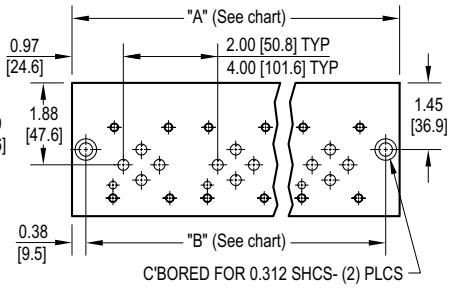

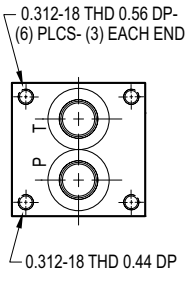

Parallel Circuit

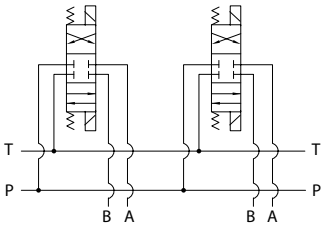

! NOTE:
Mounting hardware is ordered separately.
See page 62 for available bracket or screw mounting kits at no extra charge. Flange and gasket kits are also available for a nominal charge.

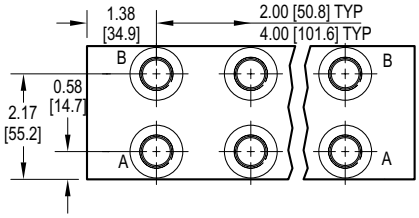

Flow Curve

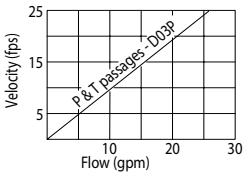

Rated flow 14 gpm @ 15 fps

Code 2 (2.00") valve spacing										
No. of stations	* 01	02	03	04	05	06	07	08	09	10
"A" length inch [mm]	2.75 [69.9]	4.75 [120.7]	6.75 [171.5]	8.75 [222.3]	10.75 [273.1]	12.75 [323.9]	14.75 [374.7]	16.75 [425.5]	18.75 [476.3]	20.75 [527.1]
"B" dimension inch [mm]	2.00 [50.8]	4.00 [101.6]	6.00 [152.4]	8.00 [203.2]	10.00 [254.0]	12.00 [304.8]	14.00 [355.6]	16.00 [406.4]	18.00 [457.2]	20.00 [508.0]
apx. weight alum lb [kg]	2.5 [1.2]	4 [2]	6 [3]	7.5 [4]	9 [4.5]	11 [5]	12 [5.5]	14 [6.5]	15.5 [7]	17 [8]
apx. weight ferrous lb [kg]	6 [3]	10.5 [5]	15 [7]	19 [9]	23 [11]	28 [13]				

* "A" length of 01 station with relief cavity is 3.75 [95.3]. "B" dimension is 3.00 [76.2].

Code 4 (4.00") valve spacing				
No. of stations	02	03	04	05
"A" length inch [mm]	6.75 [171.5]	10.75 [273.1]	14.75 [374.7]	18.75 [476]
"B" dimension inch [mm]	6.00 [152.4]	10.00 [254.0]	14.00 [355.6]	18.00 [457.2]
apx. weight alum lb [kg]	6 [3]	9 [4.5]	13 [6]	15 [7]
apx. weight ferrous lb [kg]	15 [8]	23 [12]	32 [15]	

Specifications, descriptions, and dimensional data are subject to correction or change without notice or incurring obligation. Download latest catalog page revisions at www.daman.com.

Ordering Information

For **coating options** see pages 245-246.

Product Line	Material	Valve Pattern	Circuit	No. of Stations	Valve Spacing	Port Threads	/	Options

Product Line

L	FlexMount

Material

A	Aluminum - 6061-T6 3000† psi • 20.7 MPa
D	Ductile Iron - D4512 5000† psi • 34.5 MPa

† Working pressure should be considered in accordance with ISO 4413 to determine appropriate material type.

Valve Pattern

D03	ISO 4401-03-02 NFPA T3.5.1-D03 See Tech Information

Circuit

P	Parallel Circuit Standard Flow

No. of Stations

Aluminum	
01...10	Available with spacing code 2
02...05	Available with spacing code 4
Ductile Iron	
01...06	Available with spacing code 2
02...04	Available with spacing code 4

Valve Spacing

2	2.00 inch [50.8 mm]
4	4.00 inch [101.6 mm]

Port Threads

		P & T	A & B
P	NPTF • ANSI B1.20.3	0.50	0.38
S	SAE • ISO 11926	-10	-8

Options

See next page for available options and ordering codes.

Daman Products Company, Inc. • 1811 North Home Street • Mishawaka, IN 46545-7267
Tel: 800.959.7841 574.259.7841 • Fax: 800.241.7664 • Email: sales@daman.com • www.daman.com

Options - D03 FlexMount Parallel Manifold

Contact Daman for cavity locations if critical.

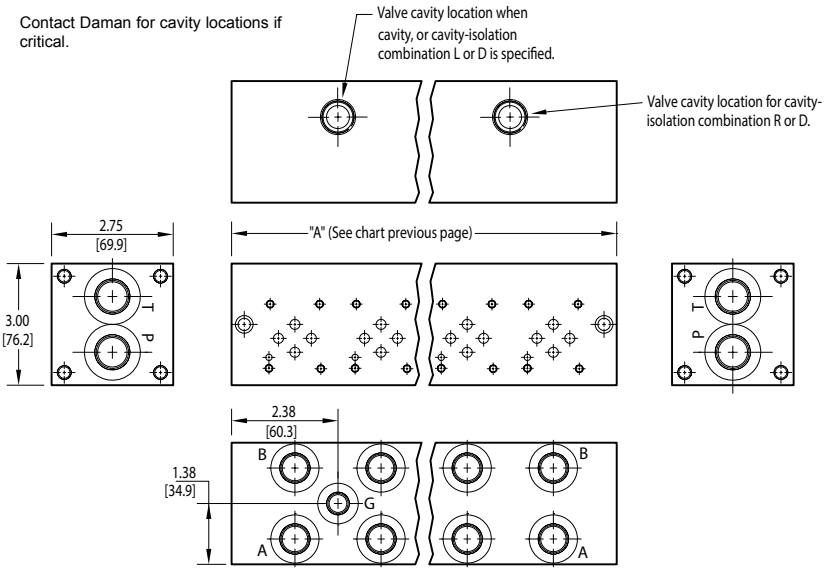

ISOLATIONS

Daman isolation options allow a manifold to have two independent pressure and/or tank ports. Isolations are drilled rather than plugged to ensure a leakproof and failproof isolation.

Ordering code letter:	* Isolation is between stations:	Available # of stations:
2.00 [50.8] spacing		
A	01 & 02	02-10
B	02 & 03	03-10
C	03 & 04	04-10
D	04 & 05	05-10
E	05 & 06	06-10
F	06 & 07	07-10
G	07 & 08	08-10
H	08 & 09	09-10
J	09 & 10	10
4.00 [101.6] spacing		
A	01 & 02	02-05
B	02 & 03	03-05
C	03 & 04	04-05
D	04 & 05	05

* Stations are numbered left to right.

Parallel Circuit with Cavity and Gauge Port

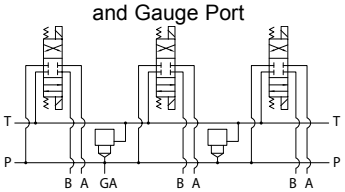

Valves with P in the nose and T out the side must be used.

Parallel Circuit with Isolations

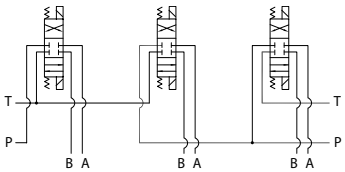

Manifold shown with P isolation between 1 & 2 (PA), and T isolation between 2 & 3 (TB).

Cavity & Isolation Combinations

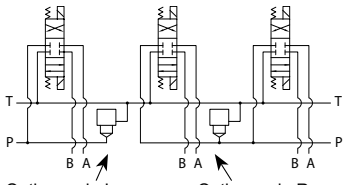

Option code L
Cavity left of isolation

Option code R
Cavity right of isolation

Option code D includes both cavities

NOTES:

1) The GA port is not available on a (1) station manifold.

2) The GA port is not available when a pressure isolation is specified.

3) Some cavity and isolation combinations are not possible. Consult factory to determine availablity.

Ordering Information

... /	Gauge Port	Cavity	Pressure Isolation	Tank Isolation	Cavity & Isolation Combinations

Gauge Port

Omit if gauge port not required.	
G	Gauge Port for system pressure
If Port Thread code is: P, then Gauge port = 0.25 NPTF S, then Gauge port = -4 SAE	

Cavity

Omit if cavity not required.	
C	Common cavity: No solenoid clearance C-10-2 (P in nose) For valves w/1" hex max.
S	Sun Cavity: T-10A (P in nose) See Tech Info for valves.

Pressure Isolation

Omit if P isolation not required. Not available with G option.	
PA...PJ	Available with spacing code 2
PA...PD	Available with spacing code 4

Tank Isolation

Omit if T isolation not required.	
TA...TJ	Available with spacing code 2
TA...TD	Available with spacing code 4

Relief / Isolation Combinations

Specify when using a combination of cavity and isolation options. Cavities do not have solenoid clearance.	
L	Relief cavity is located left of the isolation.
R	Relief cavity is located right of the isolation.
D	Two relief cavities, one each side of isolation.

Daman Products Company, Inc. • 1811 North Home Street • Mishawaka, IN 46545-7267
Tel: 800.959.7841 574.259.7841 • Fax: 800.241.7664 • Email: sales@daman.com • www.daman.com

D05 FlexMount Parallel Circuit Manifold

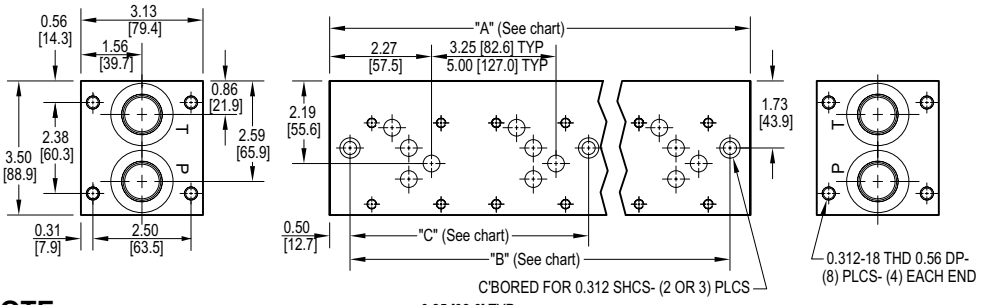

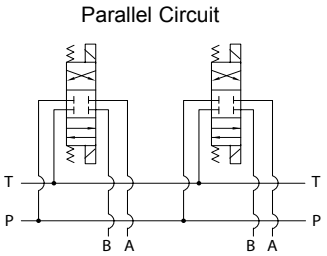

! NOTE:
Mounting hardware is ordered separately.
See page 62 for available bracket or screw mounting kits at no extra charge. Flange and gasket kits are also available for a nominal charge.

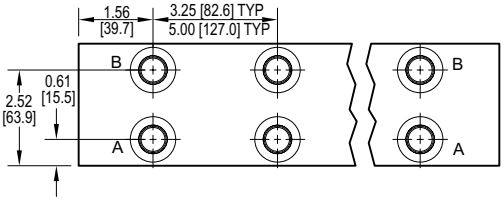

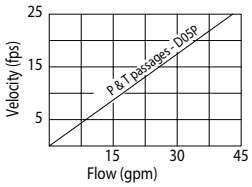

Rated flow 25 gpm @ 15 fps

Code 3 (3.25") valve spacing							
No. of stations	* 01	02	03	04	05	06	07
"A" length inch [mm]	3.25 [82.6]	6.50 [165.1]	9.75 [247.7]	13.00 [330.2]	16.25 [412.8]	19.50 [495.3]	22.75 [577.9]
"B" dimension inch [mm]	2.25 [57.2]	5.50 [139.7]	8.75 [222.3]	12.00 [304.8]	15.25 [387.4]	18.50 [469.9]	21.75 [552.5]
"C" dimension inch [mm]	--	--	--	--	6.00 [152.4]	9.25 [235.0]	12.50 [317.5]
apx. weight alum lb [kg]	4 [2]	7.5 [3]	11 [5]	14.5 [7]	18 [8]	21.5 [10]	25 [12]
apx. weight ferrous lb [kg]	9.5 [4.5]	19 [8.5]	28 [13]	37 [17]	46.5 [21]	56 [25.5]	

Code 5 (5.00") valve spacing				
No. of stations	02	03	04	05
"A" length inch [mm]	8.25 [209.6]	13.25 [336.6]	18.25 [463.6]	23.25 [590.6]
"B" dimension inch [mm]	7.25 [184.2]	12.25 [311.2]	17.25 [438.2]	22.25 [565.2]
"C" dimension inch [mm]	--	--	8.63 [219.1]	13.63 [346.1]
apx. weight alum lb [kg]	9 [4]	15 [7]	20 [9]	25 [12]
apx. weight ferrous lb [kg]	24 [11]	38 [17]	52 [24]	

* "A" length of 01 station with relief cavity is 4.50 [114.3]. "B" dimension is 3.50 [88.9].

Specifications, descriptions, and dimensional data are subject to correction or change without notice or incurring obligation. Download latest catalog page revisions at www.daman.com.

Ordering Information

For **coating options** see pages 245-246.

Product Line	Material	Valve Pattern	Circuit	No. of Stations	Valve Spacing	Port Threads	/	Options

Product Line

L	FlexMount

Material

A	Aluminum - 6061-T6 3000† psi • 20.7 MPa
D	Ductile Iron - D4512 5000† psi • 34.5 MPa

† Working pressure should be considered in accordance with ISO 4413 to determine appropriate material type.

Valve Pattern

D05	ISO 4401-05-04 NFPA T3.5.1-D05 See Tech Information

Circuit

P	Parallel Circuit Standard Flow

No. of Stations

Aluminum	
01...07	Available with spacing code 3
02...05	Available with spacing code 5
Ductile Iron	
01...06	Available with spacing code 3
02...04	Available with spacing code 5

Valve Spacing

3	3.25 inch [82.6 mm]
5	5.00 inch [127.0 mm]

Port Threads

		P & T	A & B
P	NPTF • ANSI B1.20.3	0.75	0.50
S	SAE • ISO 11926	-12	-8

Options

See next page for available options and ordering codes.

Daman Products Company, Inc. • 1811 North Home Street • Mishawaka, IN 46545-7267
Tel: 800.959.7841 574.259.7841 • Fax: 800.241.7664 • Email: sales@daman.com • www.daman.com

Options - D05 FlexMount Parallel Manifold

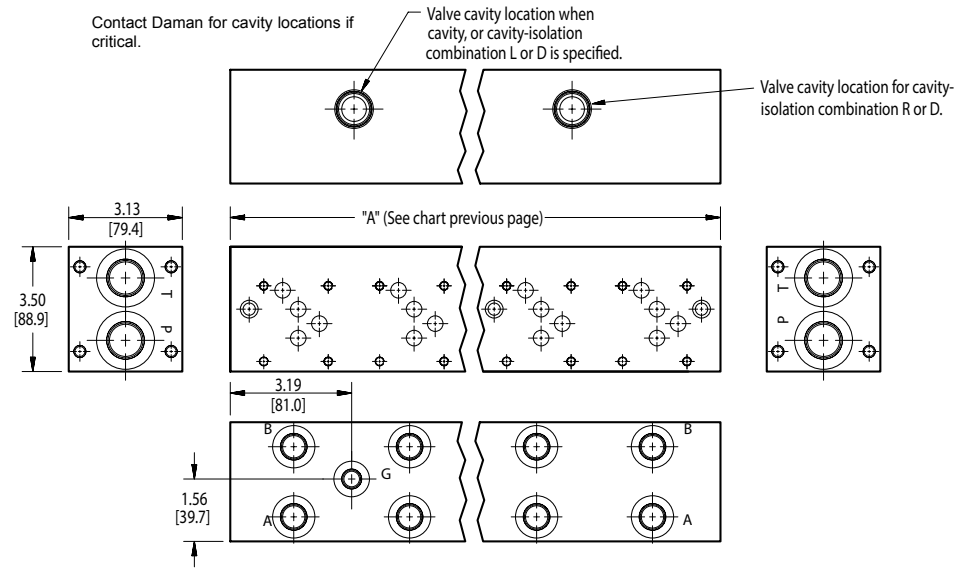

ISOLATIONS

Daman isolation options allow a manifold to have two independent pressure and/or tank ports. Isolations are drilled rather than plugged to ensure a leakproof and failproof isolation.

Ordering code letter:	* Isolation is between stations:	Available # of stations:
3.25 [82.6] spacing		
A	01 & 02	02-07
B	02 & 03	03-07
C	03 & 04	04-07
D	04 & 05	05-07
E	05 & 06	06-07
F	06 & 07	07
5.00 [127.0] spacing		
A	01 & 02	02-05
B	02 & 03	03-05
C	03 & 04	04-05
D	04 & 05	05

* Stations are numbered left to right.

Parallel Circuit with Cavity and Gauge Port

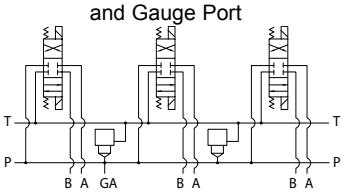

Valves with P in the nose and T out the side must be used.

Parallel Circuit with Isolations

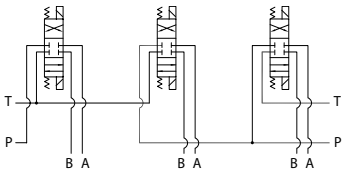

Manifold shown with P isolation between 1 & 2 (PA), and T isolation between 2 & 3 (TB).

Cavity & Isolation Combinations

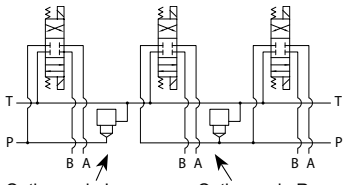

Option code L
Cavity left of isolation

Option code R
Cavity right of isolation

Option code D includes both cavities

NOTES:

1) The GA port is not available on a (1) station manifold.

2) The GA port is not available when a pressure isolation is specified.

3) Some cavity and isolation combinations are not possible. Consult factory to determine availablity.

Ordering Information

... /	Gauge Port	Cavity	Pressure Isolation	Tank Isolation	Cavity & Isolation Combinations

Gauge Port

Omit if gauge port not required.	
G	Gauge Port for system pressure
If Port Thread code is: P, then Gauge port = 0.25 NPTF S, then Gauge port = -4 SAE	

Cavity

Omit if cavity not required.	
C	Common cavity: With solenoid clearance C-10-2 (P in nose) For valves w/1" hex max.
S	Sun Cavity: T-3A (P in nose) See Tech Info for valves.

Pressure Isolation

Omit if P isolation not required. Not available with G option.	
PA...PF	Available with spacing code 3
PA...PD	Available with spacing code 5

Tank Isolation

Omit if T isolation not required.	
TA...TF	Available with spacing code 3
TA...TD	Available with spacing code 5

Cavity & Isolation Combinations

Specify when using a combination of cavity and isolation options. Cavities do have solenoid clearance.	
L	Relief cavity is located left of the isolation.
R	Relief cavity is located right of the isolation.
D	Two relief cavities, one each side of isolation.

Daman Products Company, Inc. • 1811 North Home Street • Mishawaka, IN 46545-7267
Tel: 800.959.7841 574.259.7841 • Fax: 800.241.7664 • Email: sales@daman.com • www.daman.com

Mounting Kits for FlexMount Manifolds

Mounting Bracket

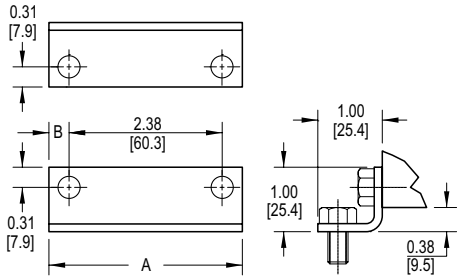

Mounting Screw

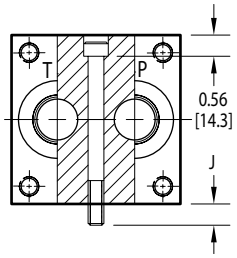

Dim	A	B	C	D	E	F	G	H	I	J	K
D03	3.00 [76.2]	0.31 [7.9]	2.75 [69.9]	1.38 [34.9]	2.13 [54.0]	0.38 [9.5]	1.47 [37.3]	1.47 [37.3]	1.33 [33.7]	0.56 [14.3]	3.25 [82.6]
D05	3.50 [88.9]	0.56 [14.3]	3.13 [79.4]	1.56 [39.7]	2.50 [63.5]	0.56 [14.3]	1.36 [34.6]	1.73 [44.0]	1.61 [41.0]	0.69 [17.5]	3.53 [89.7]

Mounting Flange

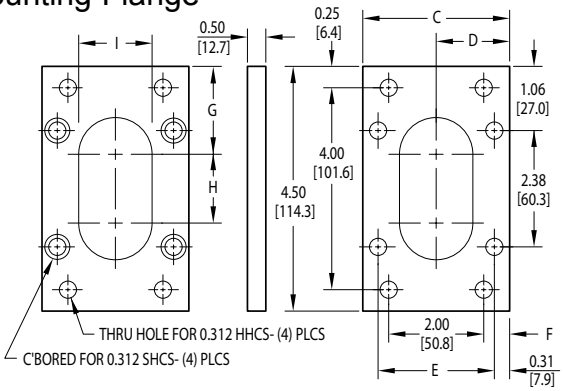

Gasket

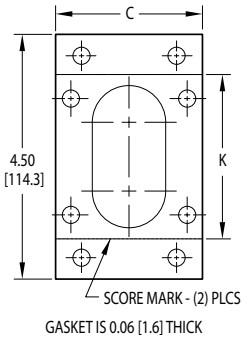

Bill of Materials

Mounting Bracket and Mounting Flange Kits	185-D03MKL	185-D03MKV	185-D05MKL	185-D05MKV
(2) zinc coated steel brackets	●		●	
(1) zinc coated steel end mounting plate		●		●
(8) 0.312-18 x 0.63 long hex washer head cap screws	●		●	
(1) 0.312-18 x 0.50 long socket head cap screw		●		
(3) 0.312-18 x 0.63 long socket head cap screws		●		
(4) 0.312-18 x 0.75 long socket head cap screws				●
(4) 0.312-18 x 1.00 long hex head cap screws		●		●
(4) 0.312 high collar lock washers		●		●
(1) Tank top gasket		●		●

Mounting Screw Kits	185-D03MKB2	185-D05MKB2	185-D05MKB3
(2) 0.312-18 x 2.75 long socket head cap screws	●		
(2) 0.312-18 x 3.25 long socket head cap screws		●	
(3) 0.312-18 x 3.25 long socket head cap screws			●

Specifications, descriptions, and dimensional data are subject to correction or change without notice or incurring obligation. Download latest catalog page revisions at www.daman.com.

Ordering Information

Inventory Number	—	Manifold Size	Mounting Kit	Mounting Configuration	Number of Screws

185 (Inventory Number)

Manifold Size	
D03	D03 Manifold
D05	D05 Manifold

Configuration	
L	Mounting Bracket kit
B	Mounting Screw kit
V	Mounting Flange kit (Includes Gasket)
G	Gasket only

No. of Screws	
Specifiy for Mounting Screw kits (type B) only.	
2	Two mounting holes on manifold. L*D03 1-6 stations. L*D05 1-4 stations with code 3 spacing. L*D05 2-3 stations with code 5 spacing.
3	Three mounting holes on manifold. L*D05 5-6 stations with code 3 spacing. L*D05 4 station with code 5 spacing.

Mounting Kit	
MK	Mounting Kit

Note: For standard, non-FlexMount manifold mounting kits, kit contents and ordering part numbers, see pages 64-65.

Daman Products Company, Inc. • 1811 North Home Street • Mishawaka, IN 46545-7267
Tel: 800.959.7841 574.259.7841 • Fax: 800.241.7664 • Email: sales@daman.com • www.daman.com

Mounting Bracket Riser Blocks

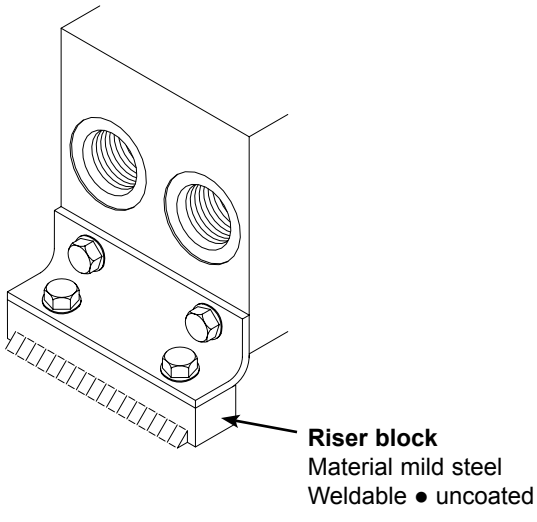

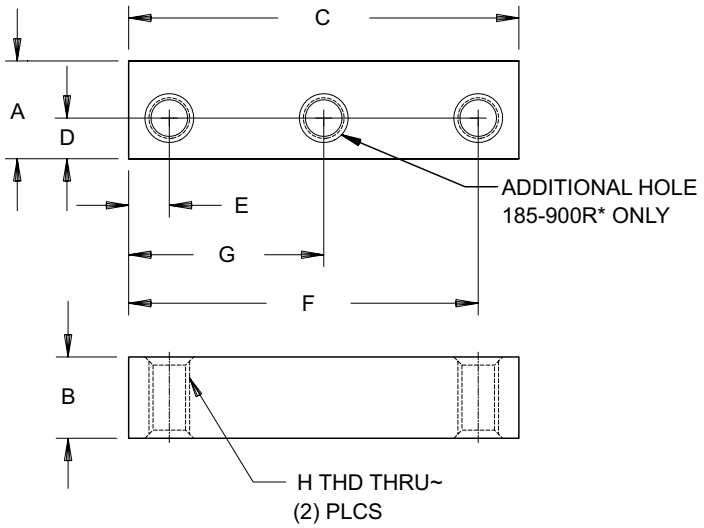

Part No.	A	B	C	D	E	F	G	H THD
185-250RU 185-250RM	0.63 [16.0]	0.50 [12.7]	2.50 [63.5]	0.25 [6.4]	0.25 [6.4]	2.25 [57.2]	--	0.250-20 UNC-2B M6 x 1 ISO 6H
185-300RU 185-300RM	0.75 [19.1]	0.63 [16.0]	3.00 [76.2]	0.31 [7.9]	0.31 [7.9]	2.69 [68.3]	--	0.312-18 UNC-2B M8 x 1.25 ISO 6H
185-350RU 185-350RM	0.75 [19.1]	0.63 [16.0]	3.50 [88.9]	0.31 [7.9]	0.56 [14.2]	2.94 [74.6]	--	0.312-18 UNC-2B M8 x 1.25 ISO 6H
185-400RU 185-400RM	0.75 [19.1]	0.63 [16.0]	4.00 [101.6]	0.31 [7.9]	0.31 [7.9]	3.69 [93.7]	--	0.312-18 UNC-2B M8 x 1.25 ISO 6H
185-500RU 185-500RM	1.00 [25.4]	0.75 [19.1]	5.00 [127.0]	0.44 [11.2]	0.44 [11.2]	4.56 [115.9]	--	0.375-16 UNC-2B M10 x 1.5 ISO 6H

Part No.	A	B	C	D	E	F	G	H THD
185-600RU 185-600RM	1.25 [31.8]	1.00 [25.4]	6.00 [152.4]	0.56 [14.2]	0.56 [14.2]	5.44 [138.1]	--	0.500-13 UNC-2B M12 x 1.75 ISO 6H
185-700RU 185-700RM	1.25 [31.8]	1.00 [25.4]	7.00 [177.8]	0.56 [14.2]	0.69 [17.5]	6.31 [160.3]	--	0.500-13 UNC-2B M12 x 1.75 ISO 6H
185-800RU 185-800RM	1.25 [31.8]	1.00 [25.4]	8.00 [203.2]	0.56 [14.2]	1.19 [30.2]	6.81 [173.0]	--	0.500-13 UNC-2B M12 x 1.75 ISO 6H
185-900RU 185-900RM	1.25 [31.8]	1.00 [25.4]	9.00 [228.6]	0.56 [14.2]	0.69 [17.5]	8.31 [211.1]	4.50 [114.3]	0.500-13 UNC-2B M12 x 1.75 ISO 6H

Specifications, descriptions, and dimensional data are subject to correction or change without notice or incurring obligation. Download latest catalog page revisions at www.daman.com.

Ordering Information

Inventory Number	—	Bracket Size	Riser	Thread Type

185 (Inventory Number)

Bracket Size	
250	2.50” Brackets (2)
300	3.00” Brackets (2)
350	3.50” Brackets (2)
400	4.00” Brackets (2)
500	5.00” Brackets (2)
600	6.00” Brackets (2)
700	7.00” Brackets (2)
800	8.00” Brackets (2)
900	9.00” Brackets (2)

R (Riser Block)

Thread Type	
U	UNC Inch Threads
M	Metric Threads

Daman Products Company, Inc. • 1811 North Home Street • Mishawaka, IN 46545-7267
Tel: 800.959.7841 574.259.7841 • Fax: 800.241.7664 • Email: sales@daman.com • www.daman.com

Daman®

Manifold Mounting Hardware*

Part no.	Cat. pg.	Mtg. Kit no.	Gauge Port Plug	Mounting Screws	Brackets
* D02 P 01 1 P	8-9	185-250-MKO	n/a	(8) UNC 0.25-20 x 0.50 long hex washer cap screw	(2) Steel brackets
* D02 P 01 1 S	8-9	185-250-MKO	n/a		
* D02 * ** 1 P	8-11	185-250-MKP	(1) 0.25-18 NPTF LSPP		
* D02 * ** 1 S	8-11	185-250-MKS	(1) -6 SAE hex socket plug		
* D02 * ** 1 B	8-11	185-250-MKM	n/a	(8) ISO 6H M6-1.0 x 12mm HHCS and (8) 0.25 SAE N series washers	
* D02 * ** 1 M	8-11	185-250-MKM	n/a		
* D02 * ** 1 T	8-11	185-250-MKM	n/a		
* D03 P 01 2 P	12-13	185-300-MKO	n/a	(8) UNC 0.31-18 x 0.63 long hex washer cap screw	(2) Steel brackets
* D03 P 01 2 S	12-13	185-300-MKO	n/a		
* D03 * ** * P	12-13, 22-23	185-300-MKP	(1) 0.25-18 NPTF LSPP		
* D03 * ** * S	12-13, 22-23	185-300-MKS	(1) -6 SAE hex socket plug		
* D03 * ** * B	12-13, 22-23	185-300-MKM	n/a	(8) ISO 6H M8-1.25 x 16mm HHCS and (8) 0.31 SAE N series washers	
* D03 * ** * M	12-13, 22-23	185-300-MKM	n/a		
* D03 * ** * T	12-13, 22-23	185-300-MKM	n/a		
* D03 TF *	15	185-400-MKO	n/a	(8) UNC 0.31-18 x 0.63 long hex washer cap screw	(2) Steel brackets
* D03 HP 01 2 P	16-17	185-400-MKO	n/a	(8) UNC 0.31-18 x 0.63 long hex washer cap screw	(2) Steel brackets
* D03 HP 01 2 S	16-17	185-400-MKO	n/a		
* D03 HP ** * P	16-17	185-400-MKP	(1) 0.25-18 NPTF LSPP		
* D03 HP ** * S	16-17	185-400-MKS	(1) -6 SAE hex socket plug		
* D03 HP ** * B	16-17	185-400-MKM	n/a	(8) ISO 6H M8-1.25 x 16mm HHCS and (8) 0.31 SAE N series washers	
* D03 HP ** * M	16-17	185-400-MKM	n/a		
* D03 HP ** * T	16-17	185-400-MKM	n/a		
* D03 HP 01 4 F	18-19	185-500-MKO	n/a	(8) UNC 0.38-16 x 0.88 long HHCS and (8) 0.38 SAE N series washers	(2) Steel brackets
* D03 HP ** 4 F	18-19	185-500-MKS	(1) -6 SAE hex socket plug		
* D03 HP ** 4 F/M	18-19	185-500-MKM	n/a	(8) ISO 6H M10-1.5 x 24mm HHCS and (8) 0.38 SAE N series washers	(2) Steel brackets
* D05 P 01 3 P	24-25	185-350-MKO	n/a	(8) UNC 0.31-18 x 0.63 long hex washer cap screw	(2) Steel brackets
* D05 P 01 3 S	24-25	185-350-MKO	n/a		
* D05 * ** * P	24-25, 36-37	185-350-MKP	(1) 0.25-18 NPTF LSPP		
* D05 * ** * S	24-25, 36-37	185-350-MKS	(1) -6 SAE hex socket plug		
* D05 * ** * B	24-25, 36-37	185-350-MKM	n/a	(8) ISO 6H M8-1.25 x 16mm HHCS and (8) 0.31 SAE N series washers	
* D05 * ** * M	24-25, 36-37	185-350-MKM	n/a		
* D05 * ** * T	24-25, 36-37	185-350-MKM	n/a		
* D05 TF *	27	185-400-MKO	n/a	(8) UNC 0.31-18 x 0.63 long hex washer cap screw	(2) Steel brackets
* D05 HP 01 3 P	28-29	185-500-MKO	n/a	(8) UNC 0.38-16 x 0.88 long HHCS and (8) 0.38 SAE N series washers	(2) Steel brackets
* D05 HP 01 3 S	28-29	185-500-MKO	n/a		
* D05 H* ** * P	28-29, 38-39	185-500-MKP	(1) 0.25-18 NPTF LSPP		
* D05 H* ** * S	28-29, 38-39	185-500-MKS	(1) -6 SAE hex socket plug		
* D05 H* ** * B	28-29, 38-39	185-500-MKM	n/a	(8) ISO 6H M10-1.5 x 24mm HHCS and (8) 0.38 SAE N series washers	
* D05 H* ** * M	28-29, 38-39	185-500-MKM	n/a		
* D05 H* ** * T	28-29, 38-39	185-500-MKM	n/a		
* D05 HP 01 5 F	30-31	185-500-MKO	n/a	(8) UNC 0.38-16 x 0.88 long HHCS and (8) 0.38 SAE N series washers	(2) Steel brackets
* D05 HP ** 5 F	30-31	185-500-MKS	(1) -6 SAE hex socket plug		
* D05 HP ** 5 F/M	30-31	185-500-MKM	n/a	(8) ISO 6H M10-1.5 x 24mm HHCS and (8) 0.38 SAE N series washers	(2) Steel brackets

*Mounting hardware not supplied for stainless steel products.

Daman Products Company, Inc. • 1811 North Home Street • Mishawaka, IN 46545-7267
Tel: 800.959.7841 574.259.7841 • Fax: 800.241.7664 • Email: sales@daman.com • www.daman.com

Manifold Mounting Hardware*

Part no.	Cat. pg.	Mtg. Kit no.	Gauge Port Plug	Mounting Screws	Brackets
* D05 JP 01 3 P	34-35	185-500-MKO	n/a	(8) UNC 0.38-16 x 0.88 long HHCS and (8) 0.38 SAE N series washers	(2) Steel brackets
* D05 JP 01 3 S	34-35	185-500-MKO	n/a		
* D05 JP ** * P	34-35	185-500-MKP	(1) 0.25-18 NPTF LSPP		
* D05 JP ** * S	34-35	185-500-MKS	(1) -6 SAE hex socket plug		
* D05 JP ** * B	34-35	185-500-MKM	n/a	(8) ISO 6H M10-1.5 x 24mm HHCS and (8) 0.38 SAE N series washers	
* D05 JP ** * M	34-35	185-500-MKM	n/a		
* D05 JP ** * T	34-35	185-500-MKM	n/a		
* D07 P 01 3 P	40-41	185-500-MKO	n/a	(8) UNC 0.38-16 x 0.88 long HHCS and (8) 0.38 SAE N series washers	(2) Steel brackets
* D07 P 01 3 S	40-41	185-500-MKO	n/a		
* D07 P ** * P	40-41	185-500-MKP	(1) 0.25-18 NPTF LSPP		
* D07 P ** * S	40-41	185-500-MKS	(1) -6 SAE hex socket plug		
* D07 P ** * B	40-41	185-500-MKM	n/a	(8) ISO 6H M10-1.5 x 24mm HHCS and (8) 0.38 SAE N series washers	
* D07 P ** * M	40-41	185-500-MKM	n/a		
* D07 P ** * T	40-41	185-500-MKM	n/a		
* D07 HP 01 4 P	42-43	185-600-MKO	n/a	(8) UNC 0.50-13 x 1.00 long HHCS and (8) 0.50 SAE N series washers	(2) Steel brackets
* D07 HP 01 4 S	42-43	185-600-MKO	n/a		
* D07 HP ** 4 P	42-43	185-600-MKP	(1) 0.25-18 NPTF LSPP		
* D07 HP ** 4 S	42-43	185-600-MKS	(1) -6 SAE hex socket plug		
* D07 HP ** 4 B	42-43	185-600-MKM	n/a	(8) ISO 6H M12-1.75 x 25mm HHCS and (8) 0.50 SAE N series washers	
* D07 HP ** 4 M	42-43	185-600-MKM	n/a		
* D07 HP ** 4 T	42-43	185-600-MKM	n/a		
* D07 HP 01 4 F	44-45	185-700-MKO	n/a	(8) UNC 0.50-13 x 1.00 long HHCS and (8) 0.50 SAE N series washers	(2) Steel brackets
* D07 HP ** 4 F	44-45	185-700-MKS	(1) -6 SAE hex socket plug		
* D07 HP ** 4 F/M	44-45	185-700-MKM	n/a	(8) ISO 6H M12-1.75 x 25mm HHCS and (8) 0.50 SAE N series washers	(2) Steel brackets
* D07 S ** 4 P	46	185-600-MKP	(1) 0.25-18 NPTF LSPP	(8) UNC 0.50-13 x 1.00 long HHCS and (8) 0.50 SAE N series washers	(2) Steel brackets
* D07 S ** 4 S	46	185-600-MKS	(1) -6 SAE hex socket plug		
* D07 S ** 4 B	46	185-600-MKM	n/a	(8) ISO 6H M12-1.75 x 25mm HHCS and (8) 0.50 SAE N series washers	
* D07 S ** 4 M	46	185-600-MKM	n/a		
* D07 S ** 4 T	46	185-600-MKM	n/a		
* D08 P 01 5 P	48-49	185-600-MKO	n/a	(8) UNC 0.50-13 x 1.00 long HHCS and (8) 0.50 SAE N series washers	(2) Steel brackets
* D08 P 01 5 S	48-49	185-600-MKO	n/a		
* D08 * ** * P	48-49, 54	185-600-MKP	(1) 0.25-18 NPTF LSPP		
* D08 * ** * S	48-49, 54	185-600-MKS	(1) -6 SAE hex socket plug		
* D08 * ** * B	48-49, 54	185-600-MKM	n/a	(8) ISO 6H M12-1.75 x 25mm HHCS and (8) 0.50 SAE N series washers	
* D08 * ** * M	48-49, 54	185-600-MKM	n/a		
* D08 * ** * T	48-49, 54	185-600-MKM	n/a		
* D08 HP 01 5 P	50-51	185-700-MKO	n/a	(8) UNC 0.50-13 x 1.00 long HHCS and (8) 0.50 SAE N series washers	(2) Steel brackets
* D08 HP 01 5 S	50-51	185-700-MKO	n/a		
* D08 HP ** * P	50-51	185-700-MKP	(1) 0.25-18 NPTF LSPP		
* D08 HP ** * S	50-51	185-700-MKS	(1) -6 SAE hex socket plug		
* D08 HP ** * B	50-51	185-700-MKM	n/a	(8) ISO 6H M12-1.75 x 25mm HHCS and (8) 0.50 SAE N series washers	
* D08 HP ** * M	50-51	185-700-MKM	n/a		
* D08 HP ** * T	50-51	185-700-MKM	n/a		
* D08 HP ** * F	52-53	185-800-MKS	(1) -6 SAE hex socket plug	(8) UNC 0.50-13 x 1.00 long HHCS and (8) 0.50 SAE N series washers	(2) Steel brackets
* D08 HP ** * F/M	52-53	185-800-MKM	n/a	(8) ISO 6H M12-1.75 x 25mm HHCS and (8) 0.50 SAE N series washers	(2) Steel brackets
* D10 P ** 9 F	56-57	185-900-MKS	(1) -6 SAE hex socket plug	(12) UNC 0.50-13 x 1.00 long HHCS and (12) 0.50 SAE N series washers	(2) Steel brackets
* D10 P ** 9 F/M	56-57	185-900-MKM	n/a	(12) ISO 6H M12-1.75 x 25mm HHCS and (12) 0.50 SAE N series washers	(2) Steel brackets

*Mounting hardware not supplied for stainless steel products.

Daman Products Company, Inc. • 1811 North Home Street • Mishawaka, IN 46545-7267
Tel: 800.959.7841 574.259.7841 • Fax: 800.241.7664 • Email: sales@daman.com • www.daman.com

COVERPLATES

Daman®

1811 North Home Street - Mishawaka, Indiana 46545-7267 USA

North America: 800.959.7841 · Fax: 800.241.7664

International: Tel: +1.574.259.7841 · Fax: +1.574.259.7665

Email: sales@daman.com · Web: www.daman.com

COVER PLATES

D02 Cover Plates	Page 70
D03 Cover Plates	Page 71
D05 Cover Plates	Page 72
D05 Cover Plates with Pilot Ports	Page 73
D07 Cover Plates	Page 74
D08 Cover Plates	Page 75
D10 Cover Plates	Page 76
2F06, 2F07 Cover Plates	Page 77
P06, P08, P10 Cover Plates	Page 78
R06, R08, R10 Cover Plates	Page 79
I08, I10 Cover Plates	Page 79
S04, S06 Cover Plates	Pages 80-81
Mounting Hardware	Pages 82-83

Cover Plates

The pages in this section are our standard product offerings for cover plates. If you need a custom cover plate solution please visit **www.daman.com** for Request For Quote (RFQ) instructions.

Daman Products Company, Inc. • 1811 North Home Street • Mishawaka, IN 46545-7267
Tel: 800.959.7841 574.259.7841 • Fax: 800.241.7664 • Email: sales@daman.com • www.daman.com

D02 Cover Plates

Parallel Circuit Cover Plate with Gauge Port

Cover Plate mounting hardware is supplied. *
See page 82 for itemized list.
* Plug not supplied for metric gauge port.

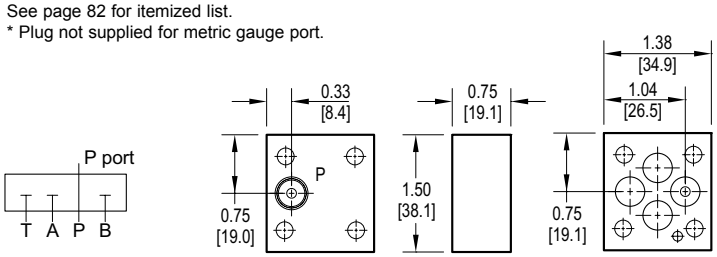

Series Circuit Cover Plate: P to T

Cover Plate mounting hardware is supplied.
See page 82 for itemized list.

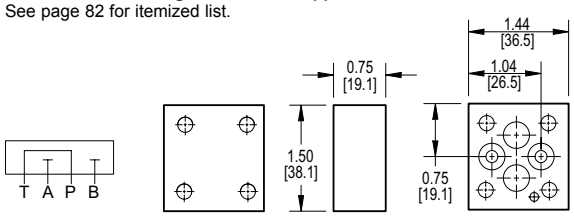

Crossover Cover Plate: P to A; B to T

Cover Plate mounting hardware is supplied.
See page 82 for itemized list.

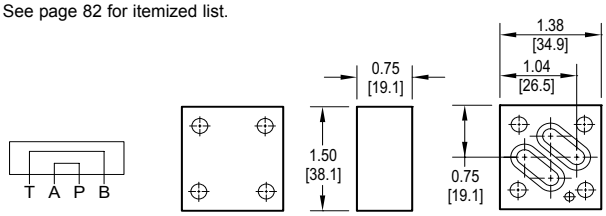

Specifications, descriptions, and dimensional data are subject to correction or change without notice or incurring obligation.
Download latest catalog page revisions at www.daman.com.

Ordering Information

Material	Valve Pattern	Circuit	Gauge Port	Bolt Threads

For **coating options** see pages 245-246.

Material

A	Aluminum - 6061-T6 3000† psi • 20.7 MPa
D	Ductile Iron - D4512 5000† psi • 34.5 MPa

† Working pressure should be considered in accordance with ISO 4413 to determine appropriate material type.

Circuit

CPP	Parallel Circuit
CPS	Series Circuit
COP	Crossover Circuit (P to A, B to T)

Bolt Threads

Omit for inch (UNC) bolt kit.	
M	Metric (ISO 6H) bolt kit

Valve Pattern

D02	ISO 4401-02-01 NFPA T3.5.1-D02 See Tech Information

Gauge Port

Required with CPP circuit. Omit on CPS and COP circuits.	
G	0.125 NPTF or 0.125 BSPT (M option)

Daman Products Company, Inc. • 1811 North Home Street • Mishawaka, IN 46545-7267
Tel: 800.959.7841 574.259.7841 • Fax: 800.241.7664 • Email: sales@daman.com • www.daman.com

D03 Cover Plates

Parallel Circuit Cover Plate

Cover Plate mounting hardware is supplied.
See page 82 for itemized list.

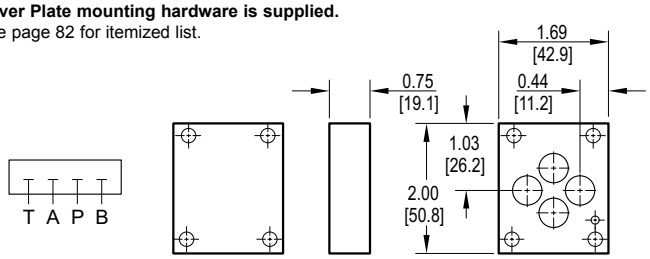

Parallel Circuit Cover Plate with Gauge Port

Cover Plate mounting hardware is supplied. *
See page 82 for itemized list.
* Plug not supplied for metric gauge port.

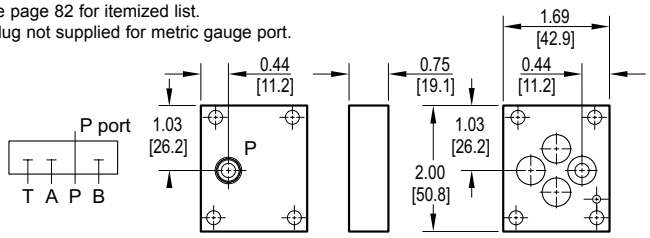

Series Circuit Cover Plate: P to T

Cover Plate mounting hardware is supplied.
See page 82 for itemized list.

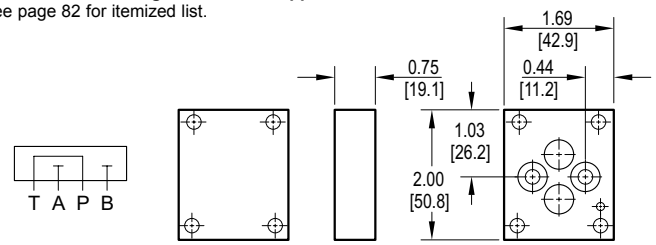

Crossover Cover Plate: P to A; B to T or P to B; A to T

Cover Plate mounting hardware is supplied.
See page 82 for itemized list.

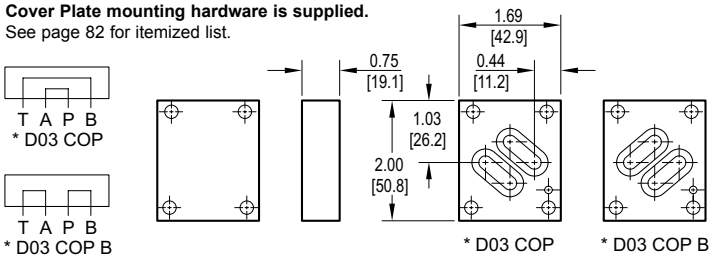

Specifications, descriptions, and dimensional data are subject to correction or change without notice or incurring obligation. Download latest catalog page revisions at www.daman.com.

Ordering Information

Material	Valve Pattern	Circuit	Gauge Port	Bolt Threads

For **coating options** see pages 245-246.

Material

A	Aluminum - 6061-T6 3000† psi • 20.7 MPa
D	Ductile Iron - D4512 5000† psi • 34.5 MPa

† Working pressure should be considered in accordance with ISO 4413 to determine appropriate material type.

Circuit

CPP	Parallel Circuit
CPS	Series Circuit
COP	Crossover Circuit (P to A, B to T)
COPB	Crossover Circuit (P to B, A to T)

Bolt Threads

	Omit for inch (UNC) bolt kit.
M	Metric (ISO 6H) bolt kit

Valve Pattern

D03	ISO 4401-03-02 NFPA T3.5.1-D03 See Tech Information

Gauge Port

Available with parallel circuit only. Omit if not required.

G	0.125 NPTF or 0.125 BSPT (M option)

Daman Products Company, Inc. • 1811 North Home Street • Mishawaka, IN 46545-7267
Tel: 800.959.7841 574.259.7841 • Fax: 800.241.7664 • Email: sales@daman.com • www.daman.com

D05 Cover Plates

Parallel Circuit Cover Plate

Cover Plate mounting hardware is supplied.
See page 82 for itemized list.

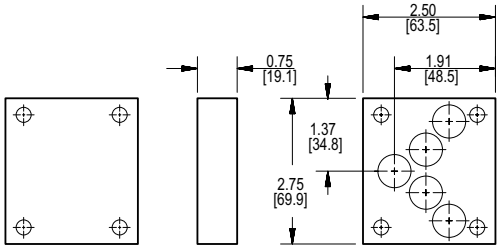

Parallel Circuit Cover Plate with Gauge Port

Cover Plate mounting hardware is supplied. *
See page 82 for itemized list.
* Plug not supplied for metric gauge port.

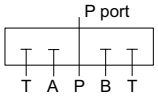

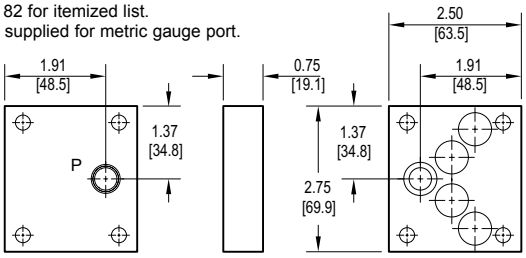

Series Circuit Cover Plate: P to T

Cover Plate mounting hardware is supplied.
See page 82 for itemized list.

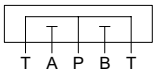

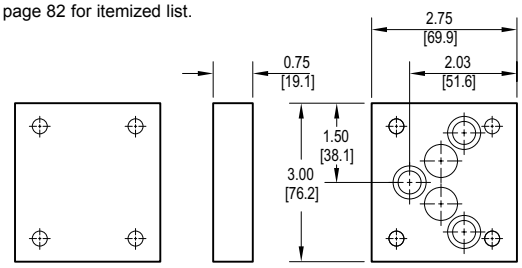

Crossover Cover Plate: P to A; B to T or P to B; A to T

Cover Plate mounting hardware is supplied. See page 82 for itemized list.

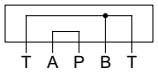

* D05 COP

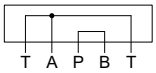

* D05 COP B

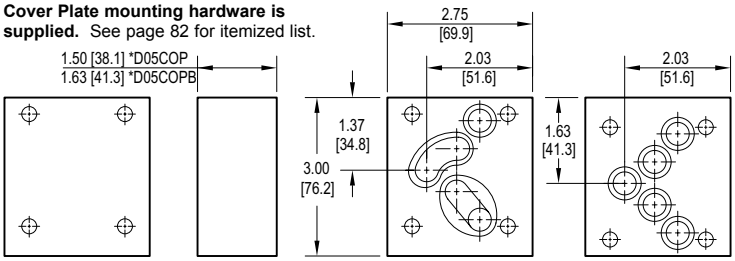

* D05 COP * D05 COP B

Specifications, descriptions, and dimensional data are subject to correction or change without notice or incurring obligation. Download latest catalog page revisions at www.daman.com.

Ordering Information

Material	Valve Pattern	Circuit	Gauge Port	Bolt Threads

For **coating options** see pages 245-246.

Material

A	Aluminum - 6061-T6 COP • 1500† psi • 10.3 MPa Other • 3000† psi • 20.7 MPa
D	Ductile Iron - D4512 COP • 3000† psi • 20.7 MPa Other • 5000† psi • 34.5 MPa

† Working pressure should be considered in accordance with ISO 4413 to determine appropriate material type.

Circuit

CPP	Parallel Circuit
CPS	Series Circuit
COP	Crossover Circuit (P to A, B to T)
COPB	Crossover Circuit (P to B, A to T)

Bolt Threads

Omit for inch (UNC) bolt kit.	
M	Metric (ISO 6H) bolt kit

Valve Pattern

D05	ISO 4401-05-04 NFPA T3.5.1-D05 See Tech Information

Gauge Port

Available with parallel circuit only. Omit if not required.

G	0.250 NPTF or 0.250 BSPT (M option)

Daman Products Company, Inc. • 1811 North Home Street • Mishawaka, IN 46545-7267
Tel: 800.959.7841 574.259.7841 • Fax: 800.241.7664 • Email: sales@daman.com • www.daman.com

D05 Cover Plates with Pilot Ports

Parallel Circuit Cover Plate with Gauge Port

Cover Plate mounting hardware is supplied. *
See page 82 for itemized list.
* Plug not supplied for metric gauge port.

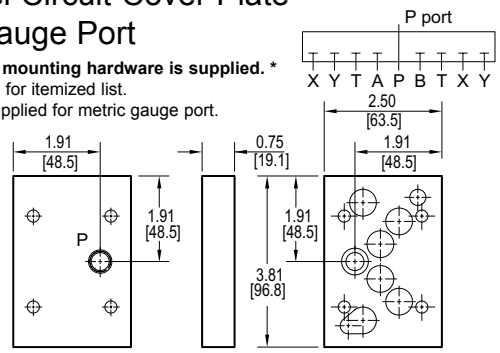

Series Circuit Cover Plate: P to T

Cover Plate mounting hardware is supplied.
See page 82 for itemized list.

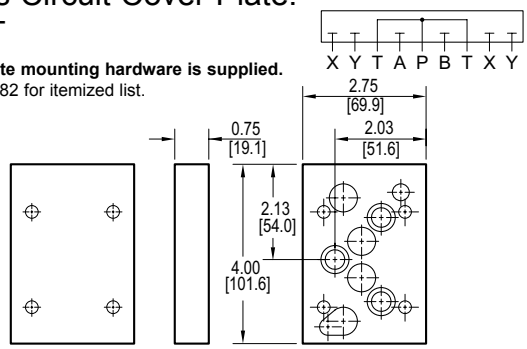

Crossover Cover Plate: P to A; B to T

Cover Plate mounting hardware is supplied.
See page 82 for itemized list.

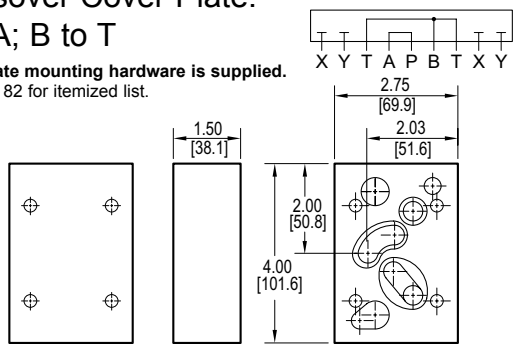

Specifications, descriptions, and dimensional data are subject to correction or change without notice or incurring obligation. Download latest catalog page revisions at www.daman.com.

Ordering Information

Material	Valve Pattern	Circuit	Gauge Port	Bolt Threads

For **coating options** see pages 245-246.

Material

A	Aluminum - 6061-T6 COP • 1500† psi • 10.3 MPa Other • 3000† psi • 20.7 MPa
D	Ductile Iron - D4512 COP • 3000† psi • 20.7 MPa Other • 5000† psi • 34.5 MPa

† Working pressure should be considered in accordance with ISO 4413 to determine appropriate material type.

Circuit

CPP	Parallel Circuit
CPS	Series Circuit
COP	Crossover Circuit (P to A, B to T)

Bolt Threads

	Omit for inch (UNC) bolt kit.
M	Metric (ISO 6H) bolt kit

Valve Pattern

D05H	ISO 4401-05-05 NFPA T3.5.1-D05 Alt A & B See Technical Information

Gauge Port

Required with parallel circuit. Omit on S and COP circuits.

G	0.250 NPTF or 0.250 BSPT (M option)

Daman Products Company, Inc. • 1811 North Home Street • Mishawaka, IN 46545-7267
Tel: 800.959.7841 574.259.7841 • Fax: 800.241.7664 • Email: sales@daman.com • www.daman.com

D07 Cover Plates

Parallel Circuit Cover Plate with Gauge Port

Cover Plate mounting hardware is supplied. *
See page 82 for itemized list.
* Plug not supplied for metric gauge port.

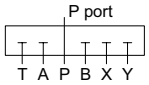

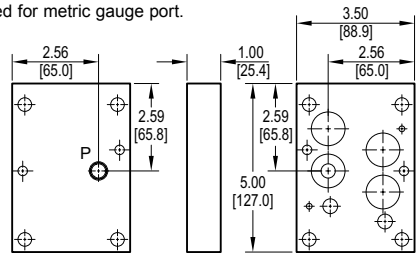

Series Circuit Cover Plate: P to T

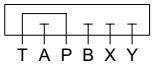

Cover Plate mounting hardware is supplied.
See page 82 for itemized list.

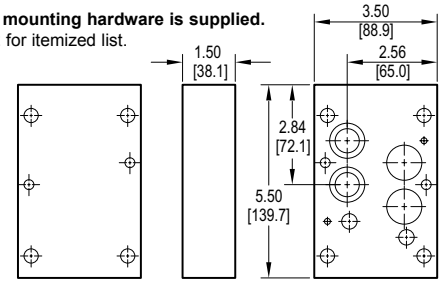

Crossover Cover Plate: P to A; B to T

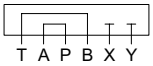

Cover Plate mounting hardware is supplied.
See page 82 for itemized list.

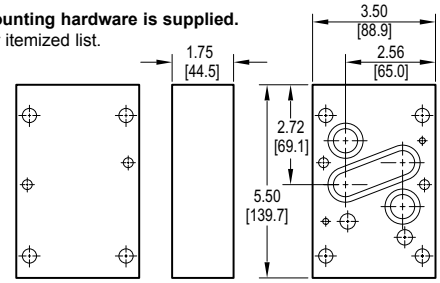

Specifications, descriptions, and dimensional data are subject to correction or change without notice or incurring obligation.
Download latest catalog page revisions at www.daman.com.

Ordering Information

Material	Valve Pattern	Circuit	Gauge Port	Bolt Threads

For **coating options** see pages 245-246.

Material

A	Aluminum - 6061-T6 COP • 1500† psi • 10.3 MPa Other • 3000† psi • 20.7 MPa
D	Ductile Iron - D4512 COP • 3000† psi • 20.7 MPa Other • 5000† psi • 34.5 MPa

† Working pressure should be considered in accordance with ISO 4413 to determine appropriate material type.

Circuit

CPP	Parallel Circuit
CPS	Series Circuit
COP	Crossover Circuit (P to A, B to T)

Bolt Threads

Omit for inch (UNC) bolt kit.	
M	Metric (ISO 6H) bolt kit

Valve Pattern

D07	ISO 4401-07-06 NFPA T3.5.1-D07 See Tech Information

Gauge Port

Available with parallel circuit. Omit on S and COP circuits.

G	0.250 NPTF or 0.250 BSPT (M option)

Daman Products Company, Inc. • 1811 North Home Street • Mishawaka, IN 46545-7267
Tel: 800.959.7841 574.259.7841 • Fax: 800.241.7664 • Email: sales@daman.com • www.daman.com

D08 Cover Plates

Parallel Circuit Cover Plate

Cover Plate mounting hardware is supplied.
See page 83 for itemized list.

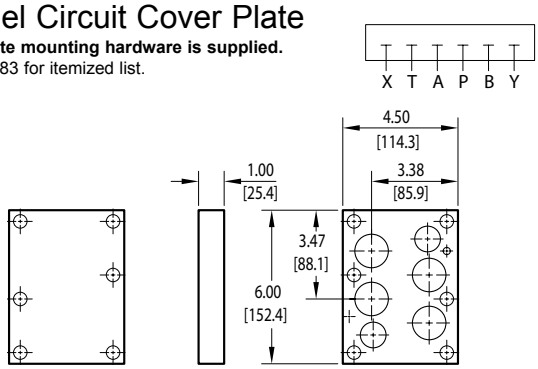

Parallel Circuit Cover Plate with Gauge Port

Cover Plate mounting hardware is supplied. *
See page 83 for itemized list.
* Plug not supplied for metric gauge port.

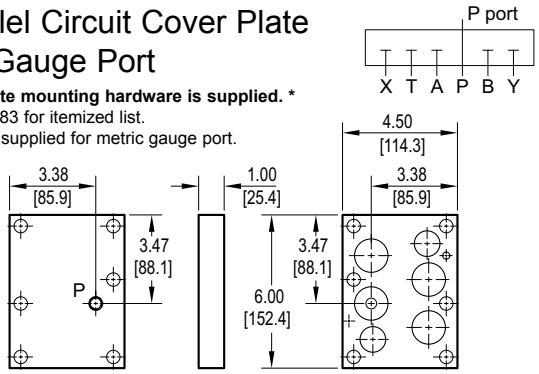

Series Circuit Cover Plate: P to T

Cover Plate mounting hardware is supplied.
See page 83 for itemized list.

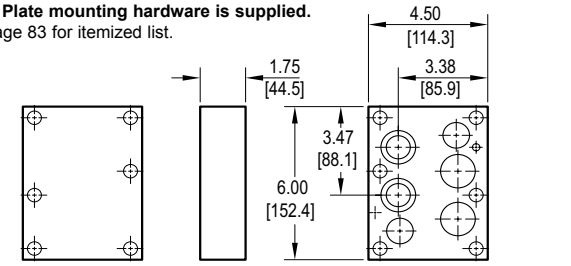

Crossover Cover Plate: P to A; B to T

Cover Plate mounting hardware is supplied.
See page 83 for itemized list.

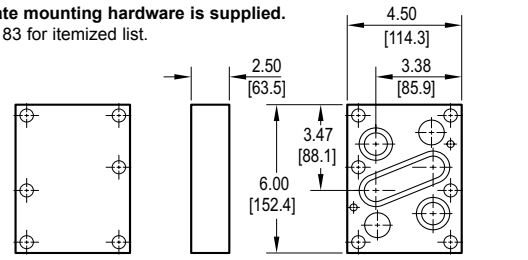

Specifications, descriptions, and dimensional data are subject to correction or change without notice or incurring obligation.
Download latest catalog page revisions at www.daman.com.

Ordering Information

Material	Valve Pattern	Circuit	Gauge Port	Bolt Threads

For **coating options** see pages 245-246.

Material

A	Aluminum - 6061-T6 COP • 1500† psi • 10.3 MPa Other • 3000† psi • 20.7 MPa
D	Ductile Iron - D4512 COP • 3000† psi • 20.7 MPa Other • 5000† psi • 34.5 MPa

† Working pressure should be considered in accordance with ISO 4413 to determine appropriate material type.

Circuit

CPP	Parallel Circuit
CPS	Series Circuit
COP	Crossover Circuit (P to A, B to T)

Bolt Threads

	Omit for inch (UNC) bolt kit.
M	Metric (ISO 6H) bolt kit

Valve Pattern

D08	ISO 4401-08-07 NFPA T3.5.1-D08 See Tech Information

Gauge Port

Available with parallel circuit only. Omit if not required.

G	0.250 NPTF or 0.250 BSPT (M option)

Daman Products Company, Inc. • 1811 North Home Street • Mishawaka, IN 46545-7267
Tel: 800.959.7841 574.259.7841 • Fax: 800.241.7664 • Email: sales@daman.com • www.daman.com

D10 Cover Plates

Parallel Circuit Cover Plate

Cover Plate mounting hardware is supplied.
See page 83 for itemized list.

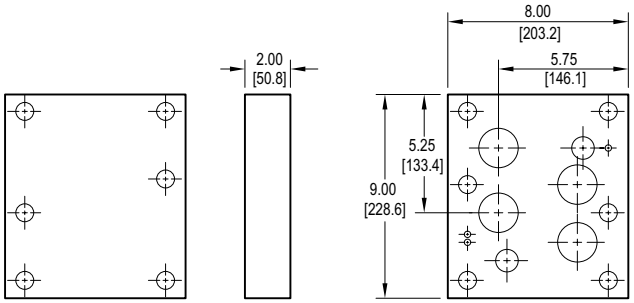

Specifications, descriptions, and dimensional data are subject to correction or change without notice or incurring obligation. Download latest catalog page revisions at www.daman.com.

Ordering Information

Material	Valve Pattern	Circuit	Bolt Threads

For **coating options** see pages 245-246.

Material

A	Aluminum - 6061-T6 3000† psi • 20.7 MPa
D	Ductile Iron - D4512 5000† psi • 34.5 MPa

† Working pressure should be considered in accordance with ISO 4413 to determine appropriate material type.

Circuit

CPP	Parallel Circuit

Bolt Threads

Omit for inch (UNC) bolt kit.	
M	Metric (ISO 6H) bolt kit

Valve Pattern

D10	ISO 4401-10-08 NFPA T3.5.1-D10 See Tech Information

Daman Products Company, Inc. • 1811 North Home Street • Mishawaka, IN 46545-7267
Tel: 800.959.7841 574.259.7841 • Fax: 800.241.7664 • Email: sales@daman.com • www.daman.com

2F06, 2F07 Flow Control Cover Plates

Parallel Circuit Cover Plate 2F06 Pattern

Cover Plate mounting hardware is supplied.
See page 83 for itemized list.

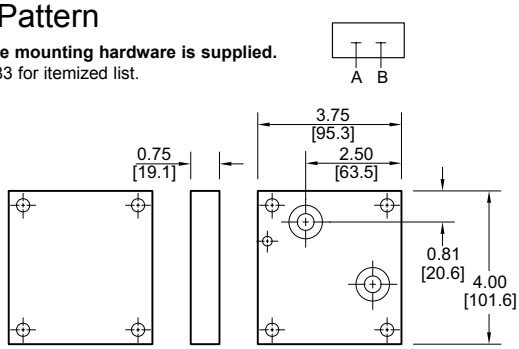

Parallel Circuit Cover Plate 2F07 Pattern

Cover Plate mounting hardware is supplied.
See page 83 for itemized list.

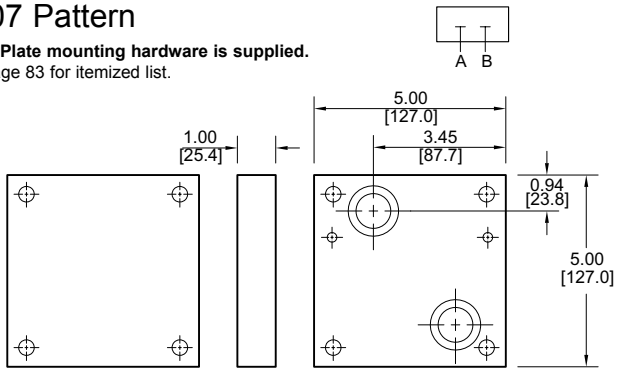

Specifications, descriptions, and dimensional data are subject to correction or change without notice or incurring obligation. Download latest catalog page revisions at www.daman.com.

Ordering Information

Material	Valve Pattern	Circuit	Bolt Threads

For **coating options** see pages 245-246.

Material

A	Aluminum - 6061-T6 3000† psi • 20.7 MPa
D	Ductile Iron - D4512 5000† psi • 34.5 MPa

† Working pressure should be considered in accordance with ISO 4413 to determine appropriate material type.

Circuit

CPP	Parallel Circuit

Bolt Threads

	Omit for inch (UNC) bolt kit.
M	Metric (ISO 6H) bolt kit

Valve Pattern

2F06	ISO 6263-06-05 NFPA T3.5.1-2F06 See Tech Information
2F07	ISO 6263-07-09 NFPA T3.5.1-2F07 See Tech Information

Daman Products Company, Inc. • 1811 North Home Street • Mishawaka, IN 46545-7267
Tel: 800.959.7841 574.259.7841 • Fax: 800.241.7664 • Email: sales@daman.com • www.daman.com

P06, P08, P10 Pressure Control Cover Plates

Parallel Circuit Cover Plate P06 Pattern

Cover Plate mounting hardware is supplied.
See page 83 for itemized list.

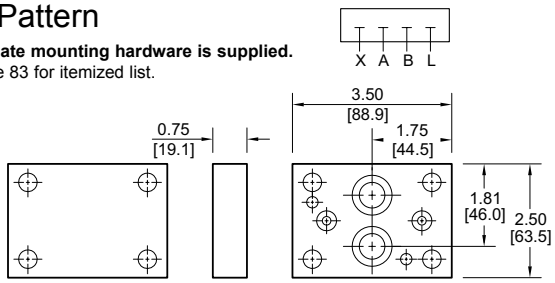

Parallel Circuit Cover Plate P08 Pattern

Cover Plate mounting hardware is supplied.
See page 83 for itemized list.

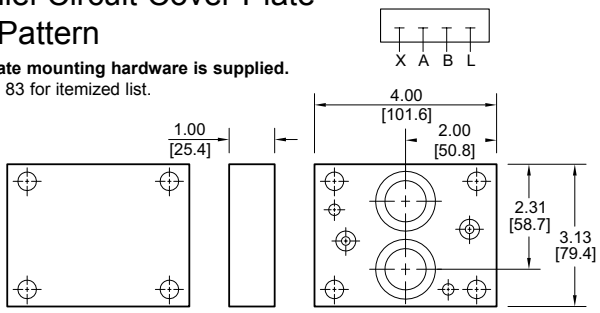

Parallel Circuit Cover Plate P10 Pattern

Cover Plate mounting hardware is supplied.
See page 83 for itemized list.

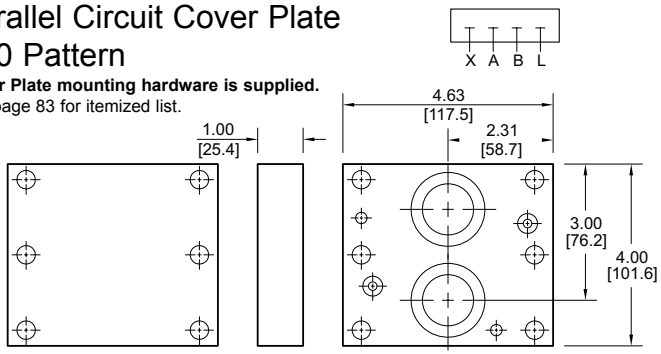

Specifications, descriptions, and dimensional data are subject to correction or change without notice or incurring obligation. Download latest catalog page revisions at www.daman.com.

Ordering Information

Material	Valve Pattern	Circuit	Bolt Threads

For **coating options** see pages 245-246.

Material	
A	Aluminum - 6061-T6 3000† psi • 20.7 MPa
D	Ductile Iron - D4512 5000† psi • 34.5 MPa

† Working pressure should be considered in accordance with ISO 4413 to determine appropriate material type.

Valve Pattern	
P06	ISO 6264-06-07 ISO 5781-06-07 NFPA T3.5.1-[R]P06 See Tech Information
P08	ISO 6264-08-11 ISO 5781-08-10 NFPA T3.5.1-[R]P08 See Tech Information
P10	ISO 6264-10-15 ISO 5781-10-13 NFPA T3.5.1-[R]P10 See Tech Information

Circuit	
CPP	Parallel Circuit

Bolt Threads	
Omit for inch (UNC) bolt kit.	
M	Metric (ISO 6H) bolt kit

Daman Products Company, Inc. • 1811 North Home Street • Mishawaka, IN 46545-7267
Tel: 800.959.7841 574.259.7841 • Fax: 800.241.7664 • Email: sales@daman.com • www.daman.com

Daman®

R06, R08, I08, R10, I10 Relief Valve Cover Plates

Parallel Circuit Cover Plate R06 (I06) Pattern

Cover Plate mounting hardware is supplied.
See page 83 for itemized list.

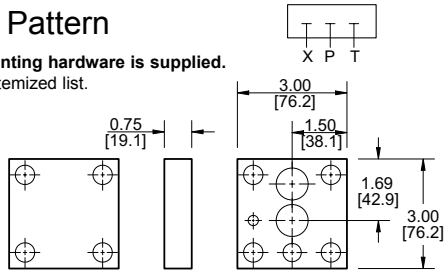

Parallel Circuit Cover Plate R08 or I08 (NFPA RV08) Pattern

Cover Plate mounting hardware is supplied.
See page 83 for itemized list.

Dimension	A	B
R08CPP	4.63 [117.5]	2.81 [71.4]
I08CPP	4.00 [101.6]	2.56 [65.1]

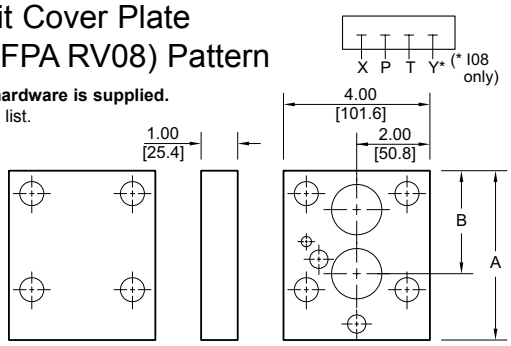

Parallel Circuit Cover Plate R10 Pattern

Cover Plate mounting hardware is supplied.
See page 83 for itemized list.

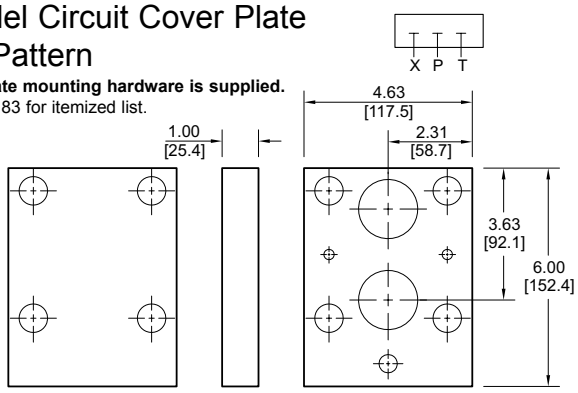

Parallel Circuit Cover Plate I10 (NFPA RV10) Pattern

Cover Plate mounting hardware is supplied.
See page 83 for itemized list.

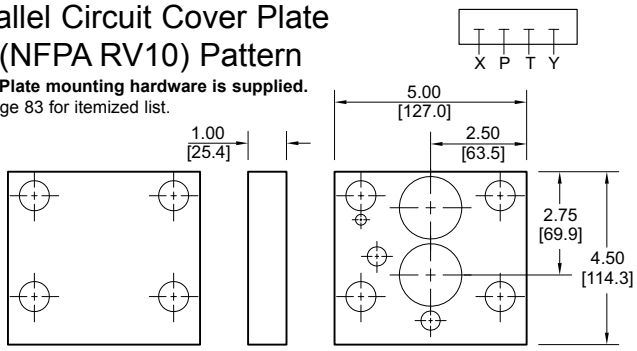

Specifications, descriptions, and dimensional data are subject to correction or change without notice or incurring obligation. Download latest catalog page revisions at www.daman.com.

Ordering Information

Material	Valve Pattern	Circuit	Bolt Threads

For **coating options** see pages 245-246.

Material

A	Aluminum - 6061-T6 3000† psi • 20.7 MPa
D	Ductile Iron - D4512 5000† psi • 34.5 MPa

† Working pressure should be considered in accordance with ISO 4413 to determine appropriate material type.

Valve Pattern

R06	ISO 6264-06-09 NFPA T3.5.1-R06 See Tech Information
R08	ISO 6264-08-13 NFPA T3.5.1-R08 See Tech Information
I08	NFPA T3.5.1-RV08 See Tech Information
R10	ISO 6264-10-17 NFPA T3.5.1-R10 See Tech Information
I10	NFPA T3.5.1-RV10 See Tech Information

Circuit

CPP	Parallel Circuit

Bolt Threads

Omit for inch (UNC) bolt kit.	
M	Metric (ISO 6H) bolt kit

Daman Products Company, Inc. • 1811 North Home Street • Mishawaka, IN 46545-7267
Tel: 800.959.7841 574.259.7841 • Fax: 800.241.7664 • Email: sales@daman.com • www.daman.com

S04, S06 Servo Valve Cover Plates

Parallel Circuit Cover Plate
S04 Pattern

Cover Plate mounting hardware is supplied.
See page 83 for itemized list.

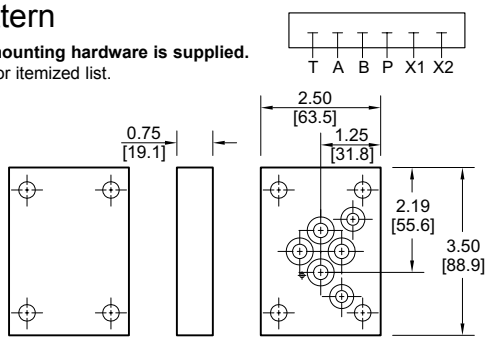

Parallel Circuit Cover Plate
S06 Pattern

Cover Plate mounting hardware is supplied.
See page 83 for itemized list.

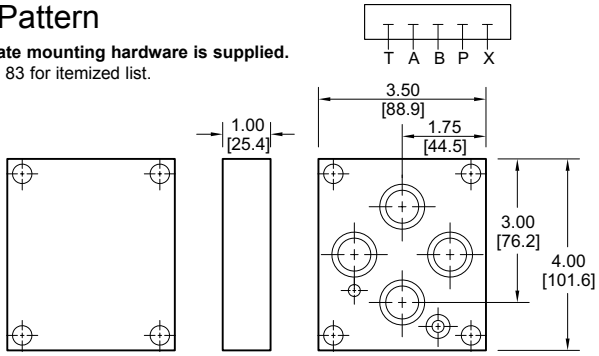

Specifications, descriptions, and dimensional data are subject to correction or change without notice or incurring obligation. Download latest catalog page revisions at www.daman.com.

Ordering Information

Material	Valve Pattern	Circuit	Bolt Threads

For **coating options** see pages 245-246.

Material

A	Aluminum - 6061-T6 3000† psi • 20.7 MPa
D	Ductile Iron - D4512 5000† psi • 34.5 MPa

† Working pressure should be considered in accordance with ISO 4413 to determine appropriate material type.

Circuit

CPP	Parallel Circuit

Valve Pattern

S04	ISO 10372-04-04 Daman std. S04 See Tech Information
S06	ISO 10372-06-04 Daman std. S06 See Tech Information

Bolt Threads

Omit for inch (UNC) bolt kit.	
M	Metric (ISO 6H) bolt kit

Daman Products Company, Inc. • 1811 North Home Street • Mishawaka, IN 46545-7267
Tel: 800.959.7841 574.259.7841 • Fax: 800.241.7664 • Email: sales@daman.com • www.daman.com

S04, S06 Servo Valve Cover Plates

S04 Crossover Cover Plate: P to A; B to T

Cover Plate mounting hardware is supplied.
See page 83 for itemized list.

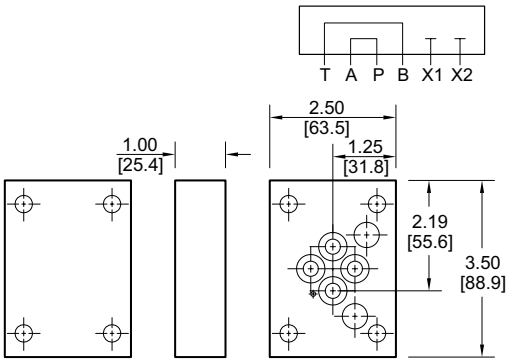

S06 Crossover Cover Plate: P to A; B to T

Cover Plate mounting hardware is supplied.
See page 83 for itemized list.

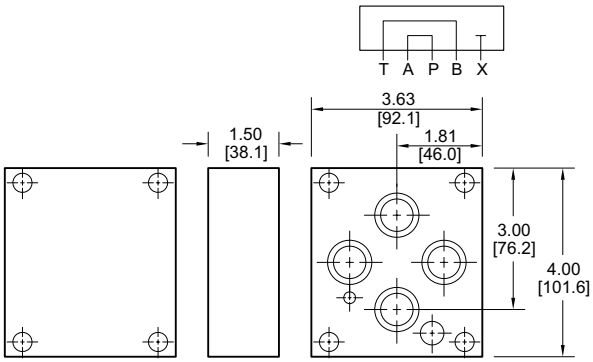

Specifications, descriptions, and dimensional data are subject to correction or change without notice or incurring obligation.
Download latest catalog page revisions at www.daman.com.

Ordering Information

Material	Valve Pattern	Circuit

For **coating options** see pages 245-246.

Material

A	Aluminum - 6061-T6 3000† psi • 20.7 MPa
D	Ductile Iron - D4512 5000† psi • 34.5 MPa

† Working pressure should be considered in accordance with ISO 4413 to determine appropriate material type.

Circuit

COP	Crossover Circuit (P to A, B to T)

Valve Pattern

S04	ISO 10372-04-04 Daman std. S04 See Tech Information
S06	ISO 10372-06-04 Daman std. S06 See Tech Information

Daman Products Company, Inc. • 1811 North Home Street • Mishawaka, IN 46545-7267
Tel: 800.959.7841 574.259.7841 • Fax: 800.241.7664 • Email: sales@daman.com • www.daman.com

Daman®

Cover Plate Mounting Hardware

Part no.	Pg.	GA port Plug	Viton O-rings, 90 duro.	Mounting Screws	Locating Pins
* D02 CP P G	70	(1) 0.12-27 NPTF	(4) -010	(4) UNC #10-24 x 1.00 long SHCS	(1) 0.12 dia x 0.25 long
* D02 CP S		n/a	(4) -010		
* D02 COP		n/a	(2) -015		
* D02 CP P G M	70	n/a	(4) -010	(4) ISO 6H M5-0.8 x 25mm SHCS	
* D02 CP S M		n/a	(4) -010		
* D02 COP M		n/a	(2) -015		
* D03 CP P	71	n/a	(4) -012	(4) UNC #10-24 x 1.00 long SHCS	(1) 0.12 dia x 0.25 long
* D03 CP P G		(1) 0.12-27 NPTF	(4) -012		
* D03 CP S		n/a	(4) -012		
* D03 COP		n/a	(2) -016		
* D03 COPB		n/a	(2) -016		
* D03 CP P M	71	n/a	(4) -012	(4) ISO 6H M5-0.8 x 25mm SHCS	
* D03 CP P G M		n/a	(4) -012		
* D03 CP S M		n/a	(4) -012		
* D03 COP M		n/a	(2) -016		
* D03 COPB M		n/a	(2) -016		
* D05 CP P	72	n/a	(5) -014	(4) UNC 0.25-20 x 1.25 long SHCS	n/a
* D05 CP P G		(1) 0.25-18 NPTF	(5) -014	(4) UNC 0.25-20 x 1.25 long SHCS	
* D05 CP S		n/a	(5) -014	(4) UNC 0.25-20 x 1.25 long SHCS	
* D05 COP		n/a	(1) -014; (2) -022	(4) UNC 0.25-20 x 2.00 long SHCS	
* D05 COPB		n/a	(5) -014	(4) UNC 0.25-20 x 2.00 long SHCS	
* D05 CP P M	72	n/a	(5) -014	(4) ISO 6H M6-1.0 x 30mm SHCS	
* D05 CP P G M		n/a	(5) -014	(4) ISO 6H M6-1.0 x 30mm SHCS	
* D05 CP S M		n/a	(5) -014	(4) ISO 6H M6-1.0 x 30mm SHCS	
* D05 COP M		n/a	(1) -014; (2) -022	(4) ISO 6H M6-1.0 x 50mm SHCS	
* D05 COPB M		n/a	(5) -014	(4) ISO 6H M6-1.0 x 50mm SHCS	
* D05H CP P G	73	(1) 0.25-18 NPTF	(1) -011; (6) -014; (1) -016	(4) UNC 0.25-20 x 1.25 long SHCS	n/a
* D05H CP S		n/a	(1) -011; (6) -014; (1) -016	(4) UNC 0.25-20 x 1.25 long SHCS	
* D05H COP		n/a	(1) -011; (2) -014; (1) -016; (2) -022	(4) UNC 0.25-20 x 2.00 long SHCS	
* D05H CP P G M	73	n/a	(1) -011; (6) -014; (1) -016	(4) ISO 6H M6-1.0 x 30mm SHCS	
* D05H CP S M		n/a	(1) -011; (6) -014; (1) -016	(4) ISO 6H M6-1.0 x 30mm SHCS	
* D05H COP M		n/a	(1) -011; (2) -014; (1) -016; (2) -022	(4) ISO 6H M6-1.0 x 50mm SHCS	
* D07 CP P G	74	(1) 0.25-18 NPTF	(2) -011; (4) -210	(4) UNC 0.38-16 x 1.75 long and (2) UNC 0.25-20 x 1.50 long SHCS	(2) 0.12 dia x 0.25 long
* D07 CP S		n/a	(2) -011; (4) -210	(4) UNC 0.38-16 x 2.00 long and (2) UNC 0.25-20 x 2.00 long SHCS	
* D07 COP		n/a	(2) -011; (2) -210; (1) -225	(4) UNC 0.38-16 x 2.50 long and (2) UNC 0.25-20 x 2.25 long SHCS	
* D07 CP P G M	74	n/a	(2) -011; (4) -210	(4) ISO 6H M10-1.5 x 40mm and (2) ISO 6H M6-1.0 x 35mm SHCS	
* D07 CP S M		n/a	(2) -011; (4) -210	(4) ISO 6H M10-1.5 x 50mm and (2) ISO 6H M6-1.0 x 50mm SHCS	
* D07 COP M		n/a	(2) -011; (2) -210; (1) -225	(4) ISO 6H M10-1.5 x 60mm and (2) ISO 6H M6-1.0 x 55mm SHCS	

Daman Products Company, Inc. • 1811 North Home Street • Mishawaka, IN 46545-7267
Tel: 800.959.7841 574.259.7841 • Fax: 800.241.7664 • Email: sales@daman.com • www.daman.com

Cover Plate Mounting Hardware

Part no.	Pg.	GA port Plug	Viton O-rings, 90 duro.	Mounting Screws	Locating Pins
* D08 CP P	75	n/a	(2) -210; (4) -215	(6) UNC 0.50-13 x 1.75 long SHCS	(2) 0.25 dia x 0.50 long
* D08 CP P G		(1) 0.25-18 NPTF	(2) -210; (4) -215	(6) UNC 0.50-13 x 1.75 long SHCS	
* D08 CP S		n/a	(2) -210; (4) -215	(6) UNC 0.50-13 x 2.50 long SHCS	
* D08 COP		n/a	(2) -210; (2) -215; (1) -231	(6) UNC 0.50-13 x 3.50 long SHCS	
* D08 CP P M	75	n/a	(2) -210; (4) -215	(6) ISO 6H M12-1.75 x 45mm SHCS	
* D08 CP P G M		n/a	(2) -210; (4) -215	(6) ISO 6H M12-1.75 x 45mm SHCS	
* D08 CP S M		n/a	(2) -210; (4) -215	(6) ISO 6H M12-1.75 x 65mm SHCS	
* D08 COP M		n/a	(2) -210; (2) -215; (1) -231	(6) ISO 6H M12-1.75 x 90mm SHCS	
* D10 CP P	76	n/a	(2) -210; (4) -222	(6) UNC 0.75-10 x 3.25 long SHCS	(2) 0.25 dia x 0.50 long
* D10 CP P M		n/a	(2) -210; (4) -222	(6) ISO 6H M20-2.5 x 80mm SHCS	
* 2F06 CP P	77	n/a	(2) -018	(4) UNC 0.31-18 x 1.25 long SHCS	(1) 0.25 d. x 0.50 long
* 2F07 CP P		n/a	(2) -215	(4) UNC 0.38-16 x 1.75 long SHCS	(2) 0.25 d. x 0.50 long
* 2F06 CP P M	77	n/a	(2) -018	(4) ISO 6H M8-1.25 x 35mm SHCS	(1) 0.25 d. x 0.50 long
* 2F07 CP P M		n/a	(2) -215	(4) ISO 6H M10-1.5 x 45mm SHCS	(2) 0.25 d. x 0.50 long
* P06 CP P	78	n/a	(2) -011; (2) -018	(4) UNC 0.38-16 x 1.50 long SHCS	(2) 0.25 dia x 0.50 long
* P08 CP P		n/a	(2) -011; (2) -215	(4) UNC 0.38-16 x 1.50 long SHCS	
* P10 CP P		n/a	(2) -011; (2) -220	(6) UNC 0.38-16 x 1.75 long SHCS	
* P06 CP P M	78	n/a	(2) -011; (2) -018	(4) ISO 6H M10-1.5 x 35mm SHCS	(2) 0.25 dia x 0.50 long
* P08 CP P M		n/a	(2) -011; (2) -215	(4) ISO 6H M10-1.5 x 40mm SHCS	
* P10 CP P M		n/a	(2) -011; (2) -220	(6) ISO 6H M10-1.5 x 45mm SHCS	
* R06 CP P	79	n/a	(1) -012; (2) -018	(4) UNC 0.50-13 x 1.50 long SHCS	(1) 0.25 d. x 0.50 long
* R08 CP P		n/a	(1) -012; (2) -216	(4) UNC 0.63-11 x 2.00 long SHCS	(1) 0.25 d. x 0.50 long
* R10 CP P		n/a	(1) -012; (2) -220	(4) UNC 0.75-10 x 2.25 long SHCS	(2) 0.25 d. x 0.50 long
* R06 CP P M	79	n/a	(1) -012; (2) -018	(4) ISO 6H M12-1.75 x 40mm SHCS	(1) 0.25 d. x 0.50 long
* R08 CP P M		n/a	(1) -012; (2) -216	(4) ISO 6H M16-2 x 50mm SHCS	(1) 0.25 d. x 0.50 long
* R10 CP P M		n/a	(1) -012; (2) -220	(4) ISO 6H M20-2.5 x 55mm SHCS	(2) 0.25 d. x 0.50 long
* I08 CP P	79	n/a	(2) -012; (2) -216	(4) UNC 0.63-11 x 2.00 long SHCS	(1) 0.25 dia x 0.50 long
* I10 CP P		n/a	(2) -012; (2) -220	(4) UNC 0.75-10 x 2.25 long SHCS	
* I08 CP P M	79	n/a	(2) -012; (2) -216	(4) ISO 6H M16-2 x 50mm SHCS	(1) 0.25 dia x 0.50 long
* I10 CP P M		n/a	(2) -012; (2) -220	(4) ISO 6H M20-2.5 x 55mm SHCS	
* S04 CP P	80	n/a	(2) -012; (4) -013	(4) UNC 0.31-18 x 1.50 long SHCS	(1) 0.09 d. x 0.25 long
* S06 CP P		n/a	(1) -012; (4) -019	(4) UNC 0.38-16 x 1.75 long SHCS	(1) 0.25 d. x 0.50 long
* S04 CP P M	80	n/a	(2) -012; (4) -013	(4) ISO 6H M8-1.25 x 30mm SHCS	(1) 0.09 d. x 0.25 long
* S06 CP P M		n/a	(1) -012; (4) -019	(4) ISO 6H M10-1.5 x 45mm SHCS	(1) 0.25 d. x 0.50 long
* S04 COP	81	n/a	(2) -012; (4) -013	(4) UNC 0.31-18 x 1.50 long SHCS	(1) 0.09 d. x 0.25 long
* S06 COP		n/a	(1) -012; (4) -019	(4) UNC 0.38-16 x 2.25 long SHCS	(1) 0.25 d. x 0.50 long

Daman Products Company, Inc. • 1811 North Home Street • Mishawaka, IN 46545-7267
Tel: 800.959.7841 574.259.7841 • Fax: 800.241.7664 • Email: sales@daman.com • www.daman.com

VALVE ADAPTORS

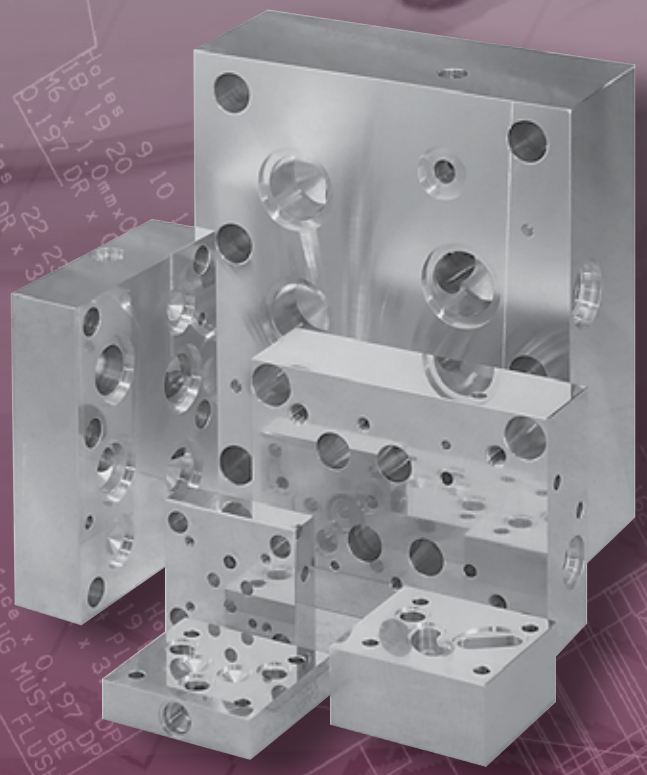

Daman®

1811 North Home Street, Mishawaka, Indiana 46545-7267 USA

North America: 800.959.7841 · Fax: 800.241.7664

International: Tel: +1.574.259.7841 · Fax: +1.574.259.7665

Email: sales@daman.com · Web: www.daman.com

VALVE ADAPTORS

Directional Valve Adaptors

Valve Adaptors for D03 Manifolds Pages 88-90
Valve Adaptors for D05 Manifolds Page 91
Valve Adaptors for D05 Manifolds with Pilot Ports Page 92
Valve Adaptors for D06 Manifolds Page 94
Valve Adaptors for D07 Manifolds Pages 95-96
Valve Adaptors for D08 Manifolds Pages 97-98
Valve Adaptors for D10 Manifolds Page 100
Valve Adaptors for S04 Manifolds Page 101

Relief Valve Manifolds

Valve Adaptors for D05H Manifolds Page 93
Valve Adaptors for D08 Manifolds Page 99

"Obsolete Valve" Adaptors

D03 Adaptors for Obsolete Manifolds Pages 102-104
D05 Adaptors for Obsolete Manifolds Page 105
D08 Adaptors for Obsolete Manifolds Page 106
D10 Adaptors for Obsolete Manifolds Page 107

Mounting Hardware Pages 108-109

Daman®

Valve Adaptors

The pages in this section are our standard product offerings for valve adaptors. If you need a custom valve adaptor solution please visit **www.daman.com** for Request For Quote (RFQ) instructions.

Daman Products Company, Inc. • 1811 North Home Street • Mishawaka, IN 46545-7267
Tel: 800.959.7841 574.259.7841 • Fax: 800.241.7664 • Email: sales@daman.com • www.daman.com

Valve Adaptors for D03 Manifolds

Adapt D02 valve to D03 manifold

Valve mtg: UNC #10-24 x 0.50 DP or
Metric M5-0.8mm ISO 6H x [12.7] DP
Adaptor mounting hardware is supplied.
See page 108 for itemized list.

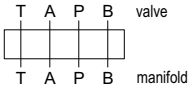

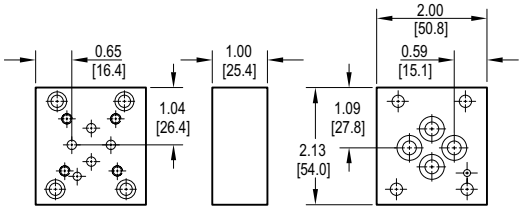

Adapt S04 valve to D03 manifold • BA oriented

Valve mtg: UNC 0.31-18 x 0.88 DP or
Metric M8 x 1.25mm ISO 6H x [22.2] DP
Adaptor mounting hardware is supplied.
See page 108 for itemized list.

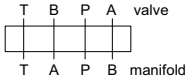

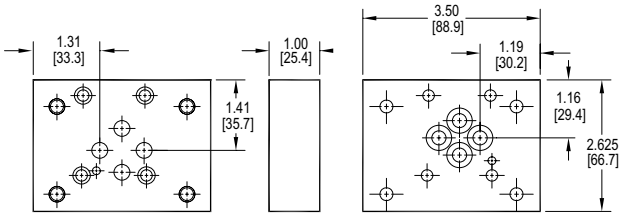

This adaptor does not orient the A & B ports on the manifold to the respective valve solenoids.

Adapt D05 valve to D03 manifold • style A

Valve mtg: UNC 0.25-20 x 0.50 DP or
Metric M6-1.0mm ISO 6H x [12.7] DP
Adaptor mounting hardware is supplied.
See page 108 for itemized list.

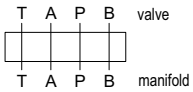

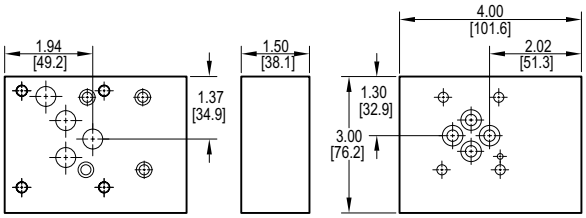

Adapt D05 valve to D03 manifold • style B

Valve mtg: UNC 0.25-20 x 0.75 DP or
Metric M6-1.0mm ISO 6H x [19.1] DP
Adaptor mounting hardware is supplied.
See page 108 for itemized list.

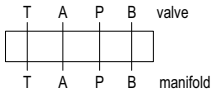

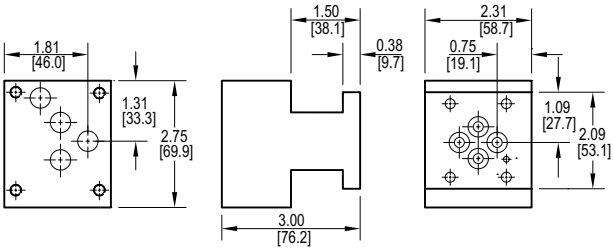

Specifications, descriptions, and dimensional data are subject to correction or change without notice or incurring obligation. Download latest catalog page revisions at www.daman.com.

Ordering Information

For **coating options** see pages 245-246.

Material	Valve Pattern	Manifold Pattern	Product Type	Port Orientation	Style	Bolt Threads

Material

A	Aluminum - 6061-T6 3000† psi • 20.7 MPa
D	Ductile Iron - D4512 5000† psi • 34.5 MPa

† Working pressure should be considered in accordance with ISO 4413 to determine appropriate material type.

Valve Pattern

D02	ISO 4401-02-01 NFPA T3.5.1-D02 See Tech Information
D05	ISO 4401-05-04 NFPA T3.5.1-D05 See Tech Information
S04	ISO 10372-04-04 Daman standard S04 See Tech Information

Manifold Pattern

D03	ISO 4401-03-02 NFPA T3.5.1-D03 See Tech Information

Product Type

VA	Valve Adaptor

Port Orientation

AB	A_v common to A_m B_v common to B_m
BA	A_v common to B_m B_v common to A_m S04 valve pattern only.

D05-D03 Style

Required with D05 valve pattern. Omit with D02 or S04 patterns.

A	Style A Low height, wide design
B	Style B Tall height, narrow design

Bolt Threads

Omit for inch (UNC) bolt kit.

M	Metric (ISO 6H) bolt kit

Daman Products Company, Inc. • 1811 North Home Street • Mishawaka, IN 46545-7267
Tel: 800.959.7841 574.259.7841 • Fax: 800.241.7664 • Email: sales@daman.com • www.daman.com

Valve Adaptors for D03 Manifolds

D03 A & B Port Swap Block • (BA oriented)

Adaptor hardware / interface seal kit is supplied. See page 108 for itemized list.

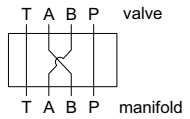

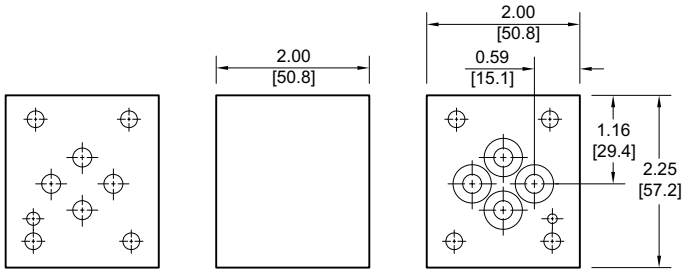

Specifications, descriptions, and dimensional data are subject to correction or change without notice or incurring obligation. Download latest catalog page revisions at www.daman.com.

Ordering Information

For **coating options** see pages 245-246.

Material	Valve Pattern	Manifold Pattern	Product Type	Port Orientation	Bolt Threads

Material

A	Aluminum - 6061-T6 3000† psi • 20.7 MPa
D	Ductile Iron - D4512 5000† psi • 34.5 MPa

† Working pressure should be considered in accordance with ISO 4413 to determine appropriate material type.

Valve Pattern

D03	ISO 4401-03-02 NFPA T3.5.1-D03 See Tech Information

Manifold Pattern

D03	ISO 4401-03-02 NFPA T3.5.1-D03 See Tech Information

Product Type

VA	Valve Adaptor

Port Orientation

BA	B_v common to A_m A_v common to B_m D03 valve pattern only.

Bolt Threads

	Omit: Mounting holes sized for inch (UNC) bolts.
M	Mounting holes sized for Metric (ISO 6H) bolts.

Daman Products Company, Inc. • 1811 North Home Street • Mishawaka, IN 46545-7267
Tel: 800.959.7841 574.259.7841 • Fax: 800.241.7664 • Email: sales@daman.com • www.daman.com

Valve Adaptors for D03 Manifolds

Rotate D03 Valve 90°

Adaptor hardware / interface seal kit is supplied. See page 108 for itemized list.

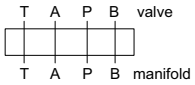

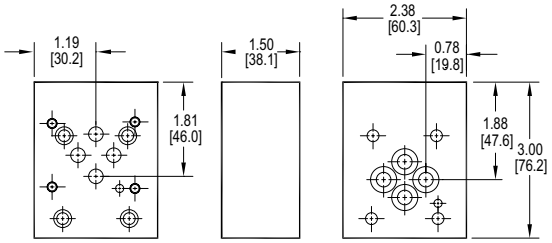

Rotate D03 Valve 180°

Adaptor hardware / interface seal kit is supplied. See page 108 for itemized list.

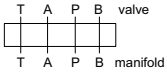

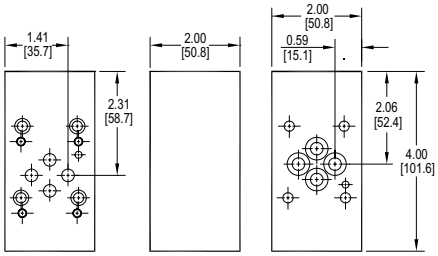

Rotate D03 Valve 270°

Adaptor hardware / interface seal kit is supplied. See page 108 for itemized list.

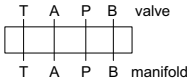

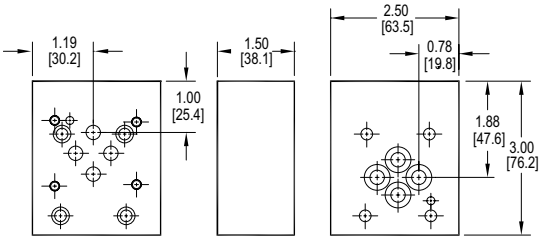

Ordering Information

For **coating options** see pages 245-246.

Material	Valve Pattern	Manifold Pattern	Product Type	Port Orientation	Rotation

Material

A	Aluminum - 6061-T6 3000† psi • 20.7 MPa
D	Ductile Iron - D4512 5000† psi • 34.5 MPa

† Working pressure should be considered in accordance with ISO 4413 to determine appropriate material type.

Manifold Pattern

D03	ISO 4401-03-02 NFPA T3.5.1-D03 See Tech Information

Port Orientation

AB	A_v common to A_m B_v common to B_m

Valve Pattern

D03	ISO 4401-03-02 NFPA T3.5.1-D03 See Tech Information

Product Type

VA	Valve Adaptor

Rotation

090	90° CCW
180	180° CCW
270	270° CCW

Daman Products Company, Inc. • 1811 North Home Street • Mishawaka, IN 46545-7267
Tel: 800.959.7841 574.259.7841 • Fax: 800.241.7664 • Email: sales@daman.com • www.daman.com

Valve Adaptors for D05 Manifolds

Adapt D03 valve to D05 manifold • AB oriented

Valve mtg: UNC #10-24 x 0.50 DP or
Metric M5-0.8mm ISO 6H x [12.7] DP
Adaptor mounting hardware is supplied.
See page 108 for itemized list.

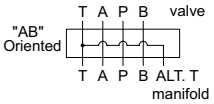

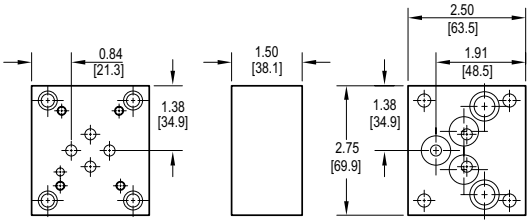

This adaptor permits the installation of a D03 valve on a D05 manifold. This adaptor, unlike *D03D05VABA*, properly orients the A & B ports on the manifold to the respective valve solenoids.

Adapt D03 valve to D05 manifold • BA oriented

Valve mtg: UNC #10-24 x 0.44 DP or
Metric M5 x 0.8mm ISO 6H x [11] DP
Adaptor mounting hardware is supplied.
See page 108 for itemized list.

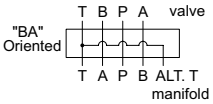

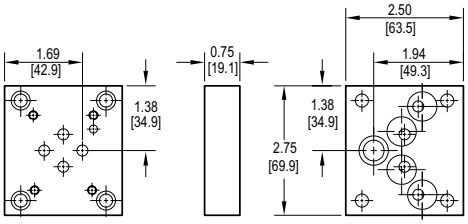

This adaptor permits the installation of a D03 valve on a D05 manifold. This adaptor, while low in cost, does not orient the A & B ports on the manifold to the respective valve solenoids.

Adapt S04 valve to D05 manifold • AB oriented

Valve mtg: UNC 0.31-18 x 0.63 DP or
Metric M8 x 1.25mm ISO 6H x [15.9] DP
Adaptor mounting hardware is supplied.
See page 108 for itemized list.

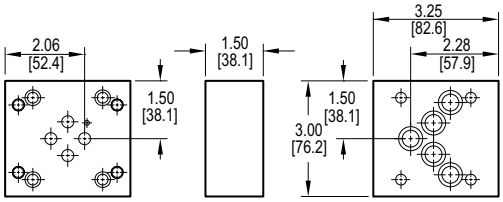

This adaptor properly orients the A & B ports on the manifold to the respective valve solenoids.

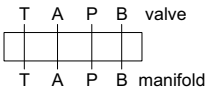

Specifications, descriptions, and dimensional data are subject to correction or change without notice or incurring obligation.
Download latest catalog page revisions at www.daman.com.

Ordering Information

For **coating options** see pages 245-246.

Material	Valve Pattern	Manifold Pattern	Product Type	Port Orientation	Bolt Threads

Material

A	Aluminum - 6061-T6 3000† psi • 20.7 MPa
D	Ductile Iron - D4512 5000† psi • 34.5 MPa

† Working pressure should be considered in accordance with ISO 4413 to determine appropriate material type.

Valve Pattern

D03	ISO 4401-03-02 NFPA T3.5.1-D03 See Tech Information
S04	ISO 10372-04-04 Daman standard S04 See Tech Information

Manifold Pattern

D05	ISO 4401-05-04 NFPA T3.5.1-D05 See Tech Information

Product Type

VA	Valve Adaptor

Port Orientation

AB	A_v common to A_m B_v common to B_m
BA	B_v common to A_m A_v common to B_m D03 valve pattern only.

Bolt Threads

	Omit for inch (UNC) bolt kit.
M	Metric (ISO 6H) bolt kit

Daman Products Company, Inc. • 1811 North Home Street • Mishawaka, IN 46545-7267
Tel: 800.959.7841 574.259.7841 • Fax: 800.241.7664 • Email: sales@daman.com • www.daman.com

Valve Adaptors for D05 Manifolds with Pilot Ports

Adapt D03 valve to D05H or D05HE manifold

Valve mtg: #10-24 UNC x 0.50 DP or
Metric M5-0.8mm ISO 6H x [12.7] DP
Adaptor mounting hardware is supplied.
See page 108 for itemized list.

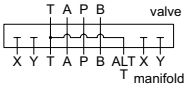

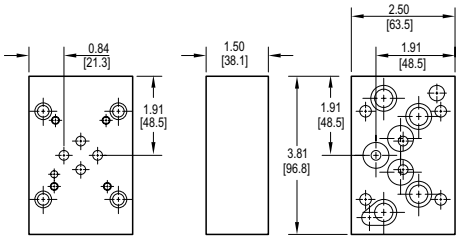

Adapt D05HE valve to D05H manifold

Adaptor interface seal kit is supplied.
See page 108 for itemized list.

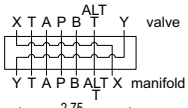

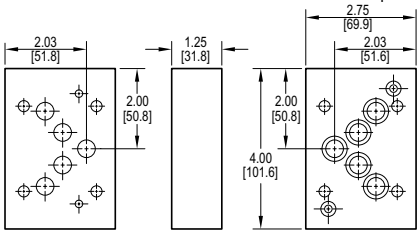

Adapt D05H valve to D05HE manifold

Adaptor interface seal kit is supplied.
See page 108 for itemized list.

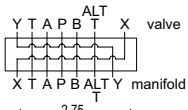

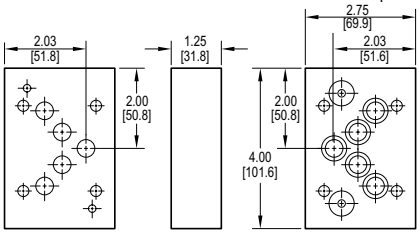

Specifications, descriptions, and dimensional data are subject to correction or change without notice or incurring obligation. Download latest catalog page revisions at www.daman.com.

Ordering Information

For **coating options** see pages 245-246.

Material	Valve Pattern	Manifold Pattern	Product Type	Port Orientation	Bolt Threads

Material

A	Aluminum - 6061-T6 3000† psi • 20.7 MPa
D	Ductile Iron - D4512 5000† psi • 34.5 MPa

† Working pressure should be considered in accordance with ISO 4413 to determine appropriate material type.

Valve Pattern
See Tech Information

D03	ISO 4401-03-02 NFPA T3.5.1-D03
D05H	(USA std) NFPA T3.5.1-D05 Alt B
D05HE	ISO 4401-05-05 NFPA T3.5.1-D05 Alt A

Manifold Pattern
See Tech Information

D05H	ISO 4401-05-05 NFPA T3.5.1-D05 Alt A & B
D05HE	ISO 4401-05-05 NFPA T3.5.1-D05 Alt A

Product Type

VA	Valve Adaptor

Port Orientation

AB	A_V common to A_m B_V common to B_m

Bolt Threads

	Omit for inch (UNC) bolt kit.
M	Metric (ISO 6H) bolt kit

Daman Products Company, Inc. • 1811 North Home Street • Mishawaka, IN 46545-7267
Tel: 800.959.7841 574.259.7841 • Fax: 800.241.7664 • Email: sales@daman.com • www.daman.com

Relief Valve Adaptors for D05(H) Manifolds

Adapt I06 (NFPA R06) valve to D05H manifold

Valve mtg: UNC 0.50-13 x 1.00 DP or
Metric M12 x 1.75mm ISO 6H x [25.4] DP
Vent port: 0.25 NPTF or 0.25 BSPT (M option).
Adaptor mounting hardware is supplied.
See page 108 for itemized list.

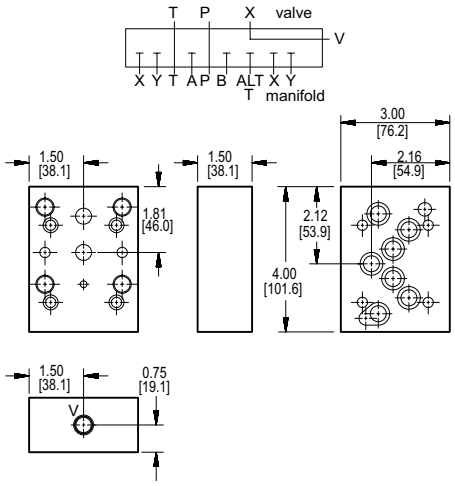

Adapt P06 valve to D05H manifold

Valve mtg: UNC 0.38-16 x 1.00 DP or
Metric M10-1.5mm ISO 6H x [25.4] DP
Vent port: 0.25 NPTF or 0.25 BSPT (M option).
Adaptor mounting hardware is supplied.
See page 108 for itemized list.

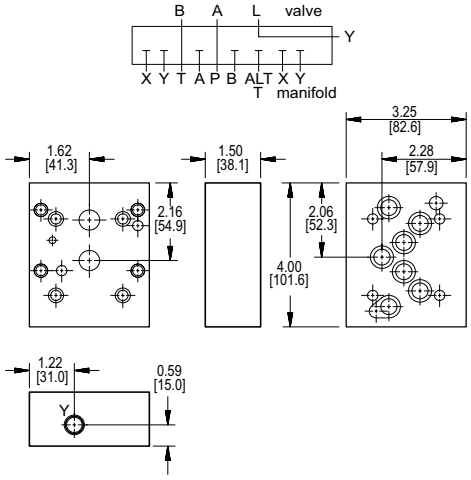

Specifications, descriptions, and dimensional data are subject to correction or change without notice or incurring obligation. Download latest catalog page revisions at www.daman.com.

Ordering Information

Material	Valve Pattern	Manifold Pattern	Product Type	Bolt Threads

For **coating options** see pages 245-246.

Material

A	Aluminum - 6061-T6 3000† psi • 20.7 MPa
D	Ductile Iron - D4512 5000† psi • 34.5 MPa

† Working pressure should be considered in accordance with ISO 4413 to determine appropriate material type.

Manifold Pattern

D05H	ISO 4401-05-05 NFPA T3.5.1-D05 Alt A & B See Tech Information

Bolt Threads

Omit for inch (UNC) bolt kit.	
M	Metric (ISO 6H) bolt kit

Valve Pattern

I06	ISO 6264-06-09-*-97 NFPA T3.5.1-R06 See Tech Information
P06	ISO 6264-06-07-*-97 ISO 5781-06-07-0-00 NFPA T3.5.1-RP06 See Tech Information

Product Type

RVA	Relief Valve Adaptor

Daman Products Company, Inc. • 1811 North Home Street • Mishawaka, IN 46545-7267
Tel: 800.959.7841 574.259.7841 • Fax: 800.241.7664 • Email: sales@daman.com • www.daman.com

Valve Adaptors for D06 Manifolds

Adapt D03 valve to D06 manifold

Valve mtg: UNC #10-24 x 0.63 [16] DP
Adaptor mounting hardware is supplied.
See page 108 for itemized list.

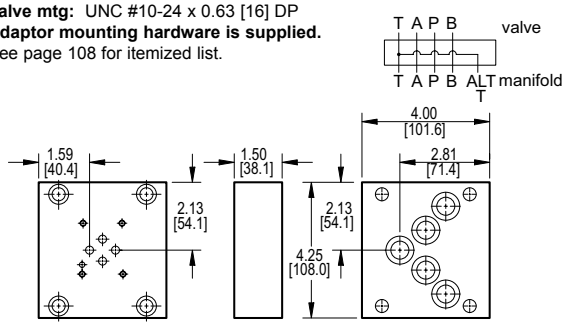

Adapt D05 valve to D06 manifold

Valve mtg: UNC 0.25-20 x 0.56 [14.2] DP
Adaptor mounting hardware is supplied.
See page 108 for itemized list.

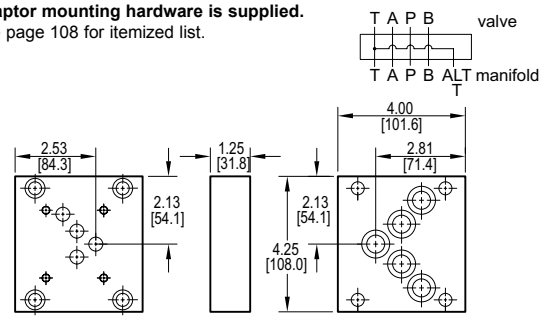

Adapt D05H valve to D06H manifold

Valve mtg: UNC 0.25-20 x 0.50 [12.7] DP
Adaptor mounting hardware is supplied.
See page 108 for itemized list.

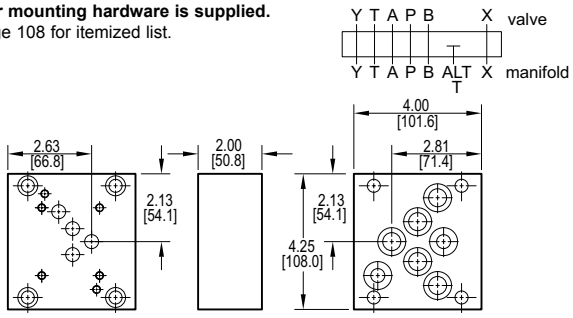

Specifications, descriptions, and dimensional data are subject to correction or change without notice or incurring obligation. Download latest catalog page revisions at www.daman.com.

Ordering Information

Material	Valve Pattern	Manifold Pattern	Product Type	Port Orientation

For **coating options** see pages 245-246.

Material

A	Aluminum - 6061-T6 3000† psi • 20.7 MPa
D	Ductile Iron - D4512 5000† psi • 34.5 MPa

† Working pressure should be considered in accordance with ISO 4413 to determine appropriate material type.

Valve Pattern
See Tech Information

D03	ISO 4401-03-02 NFPA T3.5.1-D03
D05	ISO 4401-05-04 NFPA T3.5.1-D05
D05H	(USA std) NFPA T3.5.1-D05 Alt B

Manifold Pattern
See Tech Information

D06	NFPA T3.5.1-D06 (X & Y omitted)
D06H	NFPA T3.5.1-D06 (X & Y included)

Product Type

VA	Valve Adaptor

Port Orientation

AB	A_V common to A_m B_V common to B_m

Daman Products Company, Inc. • 1811 North Home Street • Mishawaka, IN 46545-7267
Tel: 800.959.7841 574.259.7841 • Fax: 800.241.7664 • Email: sales@daman.com • www.daman.com

Valve Adaptors for D07 Manifolds

Adapt D03 valve to D07 manifold

Valve mtg: UNC #10-24 x 0.44 DP or
Metric M5-0.8mm ISO 6H x [11.1] DP
Adaptor mounting hardware is supplied.
See page 108 for itemized list.

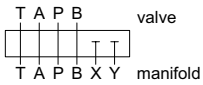

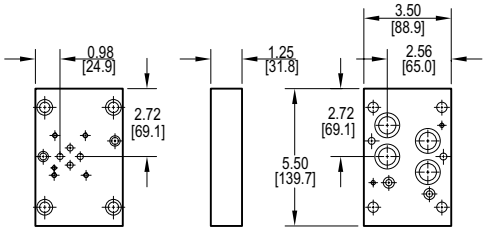

Adapt D05 valve to D07 manifold

Valve mtg: UNC 0.25-20 x 0.50 DP or
Metric M6-1.0mm ISO 6H x [12.7] DP
Adaptor mounting hardware is supplied.
See page 108 for itemized list.

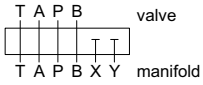

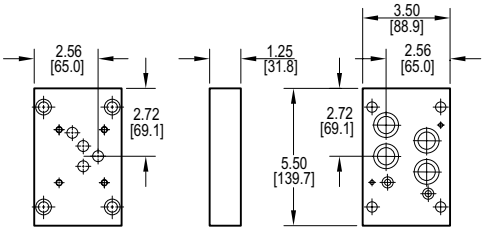

Adapt D05H valve to D07 manifold

Valve mtg: UNC 0.25-20 x 0.50 DP or
Metric M6-1.0mm ISO 6H x [12.7] DP
Adaptor mounting hardware is supplied.
See page 108 for itemized list.

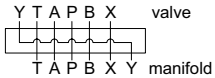

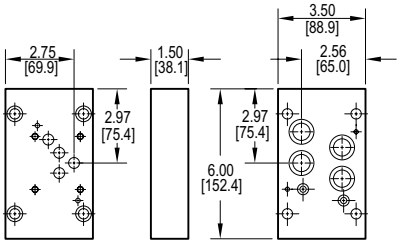

Adapt D05HE valve to D07 manifold

Valve mtg: UNC 0.25-20 x 0.50 DP or
Metric M6-1.0mm ISO 6H x [12.7] DP
Adaptor mounting hardware is supplied.
See page 108 for itemized list.

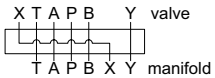

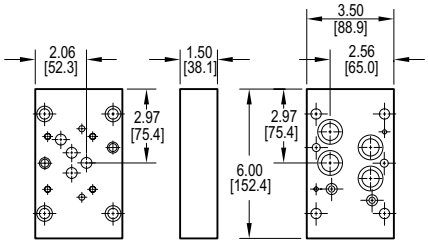

Specifications, descriptions, and dimensional data are subject to correction or change without notice or incurring obligation.
Download latest catalog page revisions at www.daman.com.

Ordering Information

For **coating options** see pages 245-246.

Material	Valve Pattern	Manifold Pattern	Product Type	Port Orientation	Bolt Threads

Material

A	Aluminum - 6061-T6 3000† psi • 20.7 MPa
D	Ductile Iron - D4512 5000† psi • 34.5 MPa

† Working pressure should be considered in accordance with ISO 4413 to determine appropriate material type.

Valve Pattern
See Tech Information

D03	ISO 4401-03-02 NFPA T3.5.1-D03
D05	ISO 4401-05-04 NFPA T3.5.1-D05
D05H	(USA std) NFPA T3.5.1-D05 Alt B
D05HE	ISO 4401-05-05 NFPA T3.5.1-D05 Alt A

Manifold Pattern

D07	ISO 4401-07-06 NFPA T3.5.1-D07 See Tech Information

Product Type

VA	Valve Adaptor

Port Orientation

AB	A_v common to A_m B_v common to B_m

Bolt Threads

	Omit for inch (UNC) bolt kit.
M	Metric (ISO 6H) bolt kit

Daman Products Company, Inc. • 1811 North Home Street • Mishawaka, IN 46545-7267
Tel: 800.959.7841 574.259.7841 • Fax: 800.241.7664 • Email: sales@daman.com • www.daman.com

Valve Adaptors for D07 Manifolds

Adapt D08 valve to D07 manifold

Valve mtg: UNC 0.50-13 x 1.19 DP or
Metric M12-1.75mm ISO 6H x [30.2] DP
Adaptor mounting hardware is supplied.
See page 108 for itemized list.

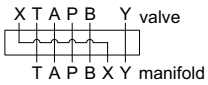

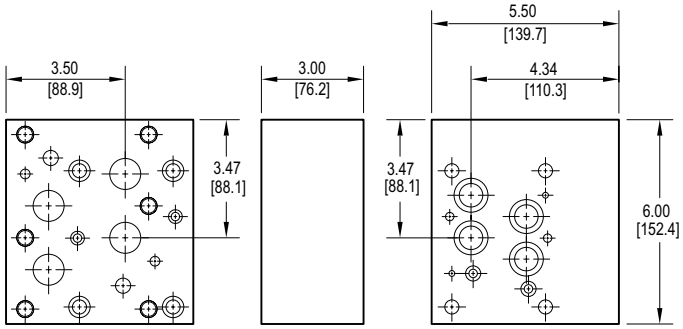

Note: This adaptor is too wide to use on any position other than station one of a multi-station manifold.

Specifications, descriptions, and dimensional data are subject to correction or change without notice or incurring obligation.
Download latest catalog page revisions at www.daman.com.

Ordering Information

For **coating options** see pages 245-246.

Material	Valve Pattern	Manifold Pattern	Product Type	Port Orientation	Bolt Threads

Material

A	Aluminum - 6061-T6 3000† psi • 20.7 MPa
D	Ductile Iron - D4512 5000† psi • 34.5 MPa

† Working pressure should be considered in accordance with ISO 4413 to determine appropriate material type.

Valve Pattern

D08	ISO 4401-08-07 NFPA T3.5.1-D08 See Tech Information

Manifold Pattern

D07	ISO 4401-07-06 NFPA T3.5.1-D07 See Tech Information

Product Type

VA	Valve Adaptor

Port Orientation

AB	A_v common to A_m B_v common to B_m

Bolt Threads

	Omit for inch (UNC) bolt kit.
M	Metric (ISO 6H) bolt kit

Daman Products Company, Inc. • 1811 North Home Street • Mishawaka, IN 46545-7267
Tel: 800.959.7841 574.259.7841 • Fax: 800.241.7664 • Email: sales@daman.com • www.daman.com

Valve Adaptors for D08 Manifolds

Adapt D03 valve to D08 manifold

Valve mtg: UNC #10-24 x 0.50 DP or
Metric M5-0.8mm ISO 6H x [12.7] DP
Adaptor mounting hardware is supplied.
See page 109 for itemized list.

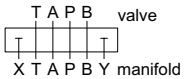

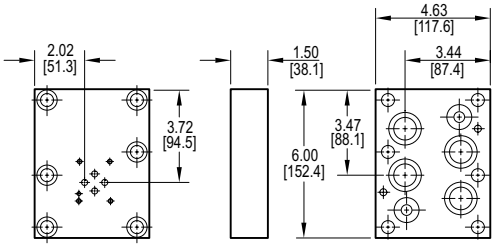

Adapt D05 valve to D08 manifold

Valve mtg: UNC 0.25-20 x 0.50 DP or
Metric M6-1.0mm ISO 6H x [12.7] DP
Adaptor mounting hardware is supplied.
See page 109 for itemized list.

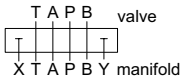

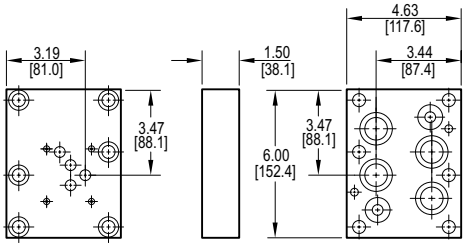

Adapt D05H valve to D08 manifold

Valve mtg: UNC 0.25-20 x 0.75 DP or
Metric M6-1.0mm ISO 6H x [19.1] DP
Adaptor mounting hardware is supplied.
See page 109 for itemized list.

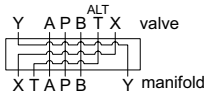

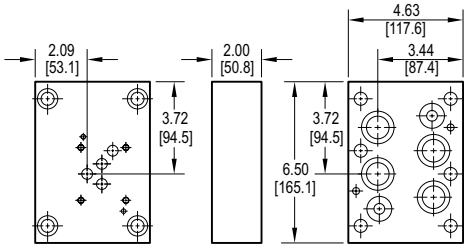

Adapt D05HE valve to D08 manifold

Valve mtg: 0.25-20 UNC x 0.50 DP or
Metric M6-1.0mm ISO 6H x [12.7] DP
Adaptor mounting hardware is supplied.
See page 109 for itemized list.

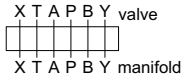

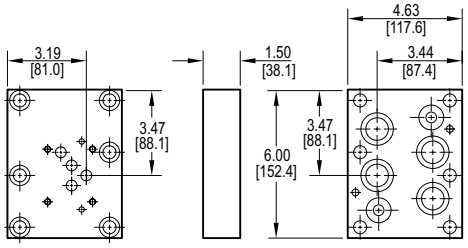

Specifications, descriptions, and dimensional data are subject to correction or change without notice or incurring obligation. Download latest catalog page revisions at www.daman.com.

Ordering Information

For **coating options** see pages 245-246.

Material	Valve Pattern	Manifold Pattern	Product Type	Port Orientation	Bolt Threads

Material

A	Aluminum - 6061-T6 3000† psi • 20.7 MPa
D	Ductile Iron - D4512 5000† psi • 34.5 MPa

† Working pressure should be considered in accordance with ISO 4413 to determine appropriate material type.

Valve Pattern
See Tech Information

D03	ISO 4401-03-02 NFPA T3.5.1-D03
D05	ISO 4401-05-04 NFPA T3.5.1-D05
D05H	(USA std) NFPA T3.5.1-D05 Alt B
D05HE	ISO 4401-05-05 NFPA T3.5.1-D05 Alt A

Manifold Pattern

D08	ISO 4401-08-07 NFPA T3.5.1-D08 See Tech Information

Product Type

VA	Valve Adaptor

Port Orientation

AB	A_v common to A_m B_v common to B_m

Bolt Threads

	Omit for inch (UNC) bolt kit.
M	Metric (ISO 6H) bolt kit

Daman Products Company, Inc. • 1811 North Home Street • Mishawaka, IN 46545-7267
Tel: 800.959.7841 574.259.7841 • Fax: 800.241.7664 • Email: sales@daman.com • www.daman.com

Valve Adaptors for D08 Manifolds

Adapt D06 valve to D08 manifold

Valve mtg: UNC 0.38-16 x 0.75 DP or
Metric M10-1.5mm ISO 6H x [19.1] DP
Adaptor mounting hardware is supplied.
See page 109 for itemized list.

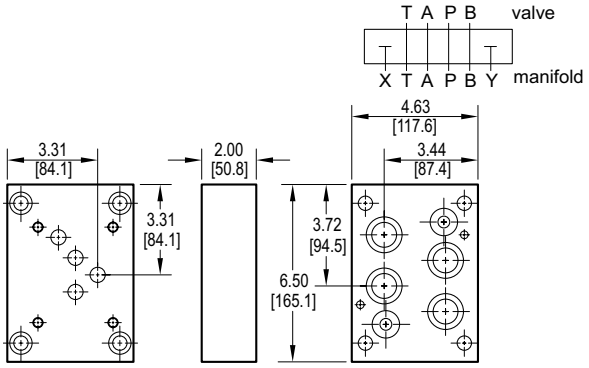

Adapt D07 valve to D08 manifold

Valve mtg: UNC 0.25-20 x 0.5 DP and UNC 0.38-16 x 0.75 DP or
Metric M6-1.0mm ISO 6H x [12.7] DP and M10-1.5mm ISO 6H x [19.1] DP
Subplate hardware kit is supplied.
See page 109 for itemized list.

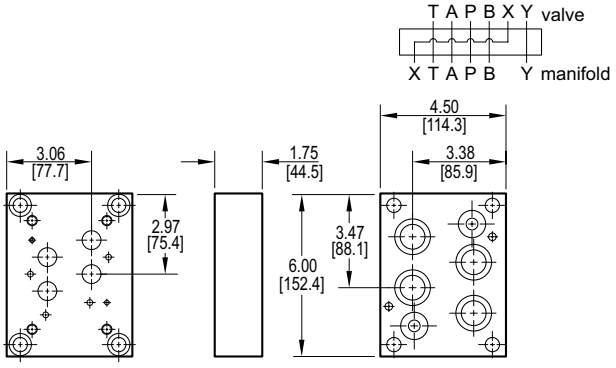

Specifications, descriptions, and dimensional data are subject to correction or change without notice or incurring obligation.
Download latest catalog page revisions at www.daman.com.

Ordering Information

For **coating options** see pages 245-246.

Material	Valve Pattern	Manifold Pattern	Product Type	Port Orientation	Bolt Threads

Material

A	Aluminum - 6061-T6 3000† psi • 20.7 MPa
D	Ductile Iron - D4512 5000† psi • 34.5 MPa

† Working pressure should be considered in accordance with ISO 4413 to determine appropriate material type.

Valve Pattern

D06	NFPA T3.5.1-D06 See Tech Information
D07	ISO 4401-07-06 NFPA T3.5.1-D07 See Tech Information

Manifold Pattern

D08	ISO 4401-08-07 NFPA T3.5.1-D08 See Tech Information

Product Type

VA	Valve Adaptor

Port Orientation

AB	A_V common to A_m B_V common to B_m

Bolt Threads

	Omit for inch (UNC) bolt kit.
M	Metric (ISO 6H) bolt kit

Daman Products Company, Inc. • 1811 North Home Street • Mishawaka, IN 46545-7267
Tel: 800.959.7841 574.259.7841 • Fax: 800.241.7664 • Email: sales@daman.com • www.daman.com

Relief Valve Adaptors for D08 Manifolds

Adapt I08 (NFPA RV08) valve to D08 manifold

Valve mtg: UNC 0.63-11 x 0.94 DP or
Metric M16-2mm ISO 6H x [23.8] DP
Vent port: 0.25 NPTF or 0.25 BSPT (M option).
Adaptor mounting hardware is supplied.
See page 109 for itemized list.

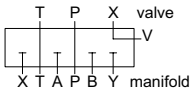

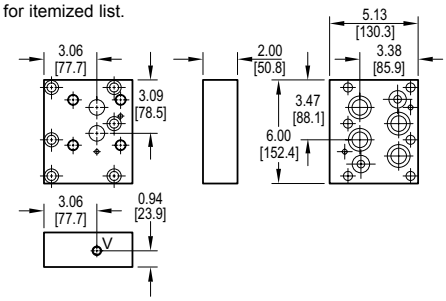

Adapt P08 valve to D08 manifold

Valve mtg: UNC 0.38-16 x 0.75 DP or
Metric M10-1.5mm ISO 6H x [19.1] DP
Adaptor mounting hardware is supplied.
See page 109 for itemized list.

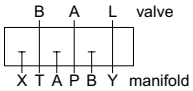

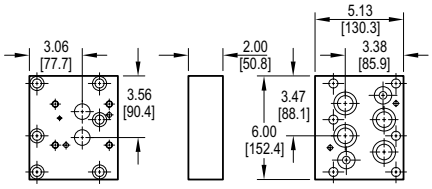

Adapt R08 valve to D08 manifold

Valve mtg: UNC 0.63-11 x 0.94 DP or
Metric M16-2.0mm ISO 6H x [23.8] DP
Vent port: 0.25 NPTF or 0.25 BSPT (M option).
Adaptor mounting hardware is supplied.
See page 109 for itemized list.

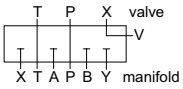

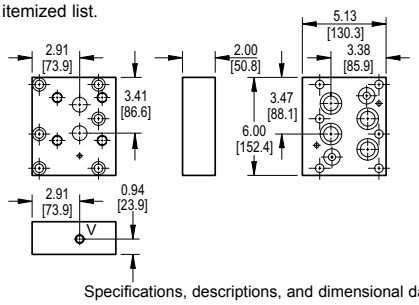

Specifications, descriptions, and dimensional data are subject to correction or change without notice or incurring obligation. Download latest catalog page revisions at www.daman.com.

Ordering Information

Material	Valve Pattern	Manifold Pattern	Product Type	Bolt Threads

For **coating options** see pages 245-246.

Material

A	Aluminum - 6061-T6 3000† psi • 20.7 MPa
D	Ductile Iron - D4512 5000† psi • 34.5 MPa

† Working pressure should be considered in accordance with ISO 4413 to determine appropriate material type.

Valve Pattern

See Tech Information

I08	NFPA T3.5.1-RV08
P08	ISO 6264-08-11-*-97 ISO 5781-08-10-0-00 NFPA T3.5.1-RP08
R08	ISO 6264-08-13-*-97 NFPA T3.5.1-R08

Manifold Pattern

D08	ISO 4401-08-07 NFPA T3.5.1-D08 See Tech Information

Product Type

RVA	Relief Valve Adaptor

Bolt Threads

	Omit for inch (UNC) bolt kit.
M	Metric (ISO 6H) bolt kit

Daman Products Company, Inc. • 1811 North Home Street • Mishawaka, IN 46545-7267
Tel: 800.959.7841 574.259.7841 • Fax: 800.241.7664 • Email: sales@daman.com • www.daman.com

Valve Adaptors for D10 Manifolds

Adapt D07 valve to D10 manifold

Valve mtg: 0.25-20 UNC x 0.75 DP and
0.38-16 UNC x 1.00 DP or
Metric M6-1.0mm ISO 6H x [19.1] DP and
M10-1.5mm ISO 6H x [25.4] DP
Adaptor mounting hardware is supplied.
See page 109 for itemized list.

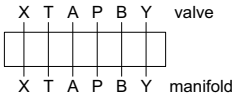

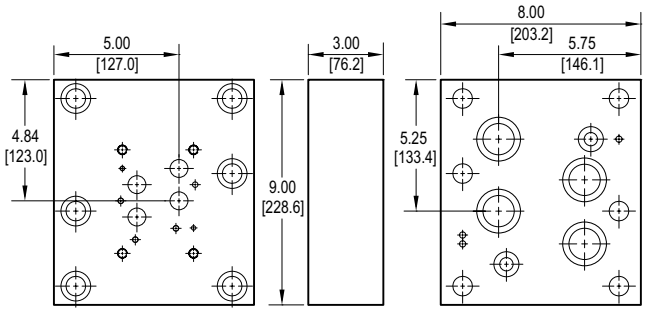

Adapt D08 valve to D10 manifold

Valve mtg: UNC 0.50-13 x 1.19 DP or
Metric M12-1.75mm ISO 6H x [30.2] DP
Adaptor mounting hardware is supplied.
See page 109 for itemized list.

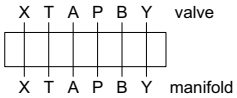

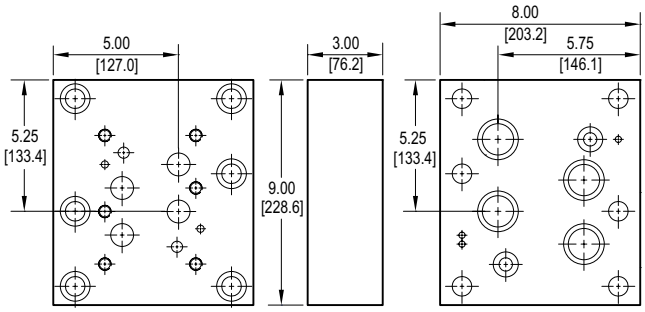

Specifications, descriptions, and dimensional data are subject to correction or change without notice or incurring obligation.
Download latest catalog page revisions at www.daman.com.

Ordering Information

For **coating options** see pages 245-246.

Material	Valve Pattern	Manifold Pattern	Product Type	Port Orientation	Bolt Threads

Material

A	Aluminum - 6061-T6 3000† psi • 20.7 MPa
D	Ductile Iron - D4512 5000† psi • 34.5 MPa

† Working pressure should be considered in accordance with ISO 4413 to determine appropriate material type.

Valve Pattern

D07	ISO 4401-07-06 NFPA T3.5.1-D07 See Tech Information
D08	ISO 4401-08-07 NFPA T3.5.1-D08 See Tech Information

Manifold Pattern

D10	ISO 4401-10-08 NFPA T3.5.1-D10 See Tech Information

Product Type

VA	Valve Adaptor

Port Orientation

AB	A_V common to A_m B_V common to B_m

Bolt Threads

	Omit for inch (UNC) bolt kit.
M	Metric (ISO 6H) bolt kit

Daman Products Company, Inc. • 1811 North Home Street • Mishawaka, IN 46545-7267
Tel: 800.959.7841 574.259.7841 • Fax: 800.241.7664 • Email: sales@daman.com • www.daman.com

Daman®

D03 / D05 Valve Adaptors for S04 Subplates

Adapt D03 valve to S04 manifold • BA oriented

Valve mtg: UNC #10-24 x 0.63 DP or
Metric M5 x 0.8mm ISO 6H x [15.9] DP
Adaptor mounting hardware is supplied.
See page 109 for itemized list.

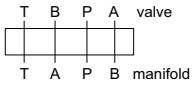

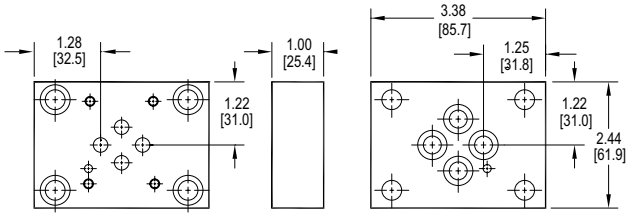

This adaptor does not orient the A & B ports on the manifold to the respective valve solenoids.

Adapt D05 valve to S04 manifold • AB oriented

Valve mtg: UNC 0.25-20 x 0.63 DP or
Metric M6 x 1.0mm ISO 6H x [15.9] DP
Adaptor mounting hardware is supplied.
See page 109 for itemized list.

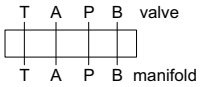

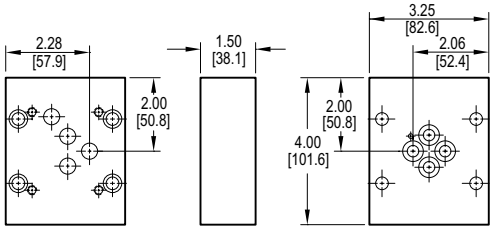

This adaptor properly orients the A & B ports on the manifold to the respective valve solenoids.

Specifications, descriptions, and dimensional data are subject to correction or change without notice or incurring obligation. Download latest catalog page revisions at www.daman.com.

Ordering Information

For **coating options** see pages 245-246.

Material	Valve Pattern	Manifold Pattern	Product Type	Port Orientation	Bolt Threads

Material

A	Aluminum - 6061-T6 3000† psi • 20.7 MPa
D	Ductile Iron - D4512 5000† psi • 34.5 MPa

† Working pressure should be considered in accordance with ISO 4413 to determine appropriate material type.

Manifold Pattern

S04	ISO 10372-04-04 Daman std. S04 See Tech Information

Port Orientation

BA	B_v common to A_m A_v common to B_m D03 valve pattern only
AB	A_v common to A_m B_v common to B_m D05 valve pattern only

Valve Pattern

D03	ISO 4401-03-02 NFPA T3.5.1-D03 See Tech Information
D05	ISO 4401-05-04 NFPA T3.5.1-D05 See Tech Information

Product Type

VA	Valve Adaptor

Bolt Threads

	Omit for inch (UNC) bolt kit.
M	Metric (ISO 6H) bolt kit

Daman Products Company, Inc. • 1811 North Home Street • Mishawaka, IN 46545-7267
Tel: 800.959.7841 574.259.7841 • Fax: 800.241.7664 • Email: sales@daman.com • www.daman.com

D03 to "Obsolete Valve" Adaptors

Adapt D03 valve to Racine 01Q manifold

Valve mtg: UNC #10-24 x 0.63 [16] DP
Adaptor mounting hardware is supplied.
See page 109 for itemized list.

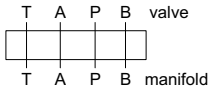

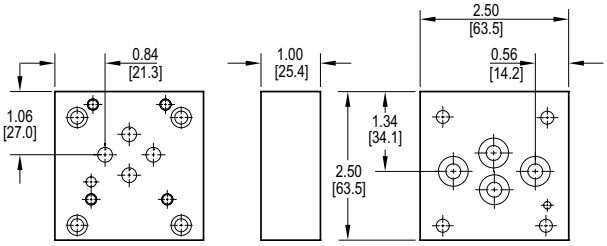

Adapt D03 valve to Racine 01S manifold

Valve mtg: UNC #10-24 x 0.75 [19.1] DP
Adaptor mounting hardware is supplied.
See page 109 for itemized list.

Note: Use pin hole A to adapt to the pilot valve pattern of a OD4-BSHS-706P valve. Use pin hole B to adapt to the 101S pattern.

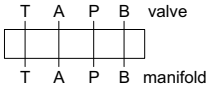

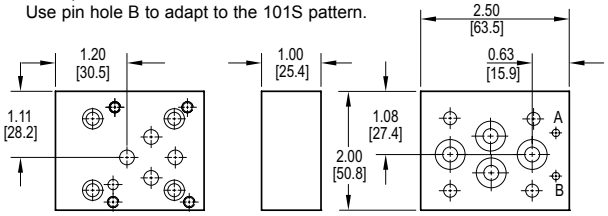

Adapt D03 valve to Parker D1B manifold

Valve mtg: UNC #10-24 x 0.63 [16] DP
Adaptor mounting hardware is supplied.
See page 109 for itemized list.

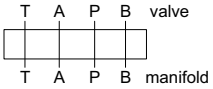

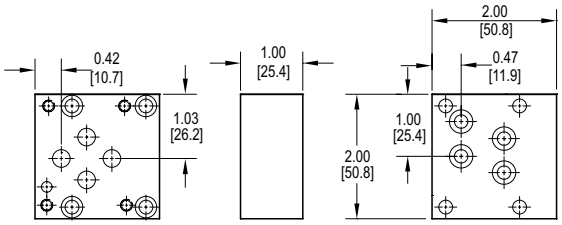

Specifications, descriptions, and dimensional data are subject to correction or change without notice or incurring obligation.
Download latest catalog page revisions at www.daman.com.

Ordering Information

Material	Valve Pattern	Manifold Pattern	Product Type	Port Orientation

For **coating options** see pages 245-246.

Material

A	Aluminum - 6061-T6 3000† psi • 20.7 MPa
D	Ductile Iron - D4512 5000† psi • 34.5 MPa

† Working pressure should be considered in accordance with ISO 4413 to determine appropriate material type.

Manifold Pattern
See Tech Information

01Q	Racine FD4-D*HS-*01Q-*
01S	Racine OD4-D*HS-101S
D1B	Parker D1BW-****

Port Orientation

AB	A_v common to A_m B_v common to B_m

Valve Pattern

D03	ISO 4401-03-02 NFPA T3.5.1-D03 See Tech Information

Product Type

VA	Valve Adaptor

Daman Products Company, Inc. • 1811 North Home Street • Mishawaka, IN 46545-7267
Tel: 800.959.7841 574.259.7841 • Fax: 800.241.7664 • Email: sales@daman.com • www.daman.com

D03 to "Obsolete Valve" Adaptors

Adapt D03 valve to Denison D1D04 manifold

Valve mtg: UNC #10-24 x 0.50 [12.7] DP
Adaptor mounting hardware is supplied.
See page 109 for itemized list.

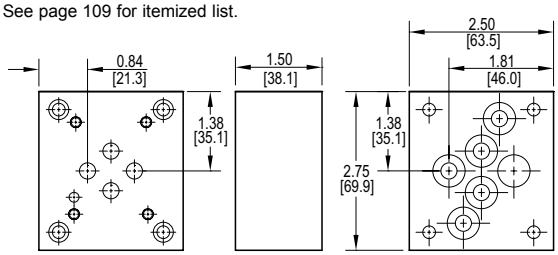

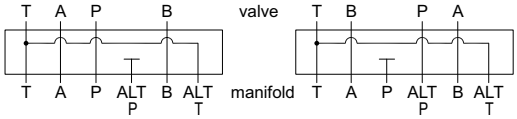

Schematic of typical installation. Replaces D1D04 valves that utilized the standard P port.

Schematic of optional installation. Replaces D1D04 pilot valves that utilized the alternate P port. The adaptor is rotated 180° in this case, which swaps A & B orientation.

Adapt D03 valve to Vickers D1L manifold

Valve mtg: UNC #10-24 x 0.63 [16] DP
Adaptor mounting hardware is supplied.
See page 109 for itemized list.

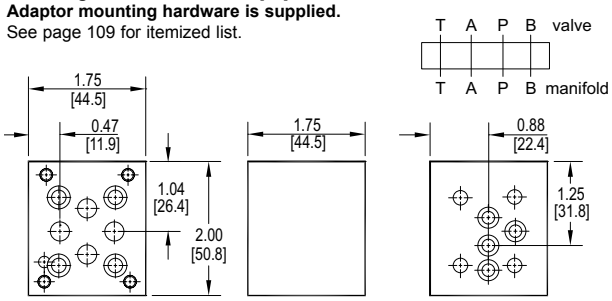

Adapt D03 valve to Vickers DG4M4 manifold

Valve mtg: UNC #10-24 x 0.63 [16] DP
Adaptor mounting hardware is supplied.
See page 109 for itemized list.

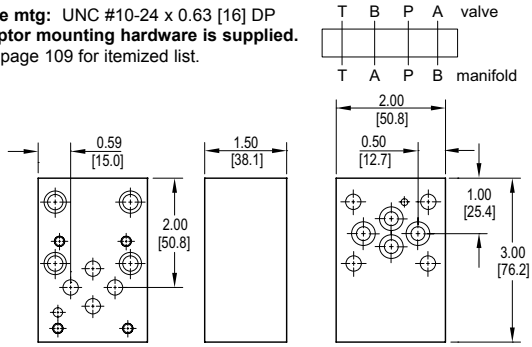

Specifications, descriptions, and dimensional data are subject to correction or change without notice or incurring obligation. Download latest catalog page revisions at www.daman.com.

Ordering Information

Material	Valve Pattern	Manifold Pattern	Product Type	Port Orientation

For **coating options** see pages 245-246.

Material

A	Aluminum - 6061-T6 3000† psi • 20.7 MPa
D	Ductile Iron - D4512 5000† psi • 34.5 MPa

† Working pressure should be considered in accordance with ISO 4413 to determine appropriate material type.

Manifold Pattern
See Tech Information

D1D04	Denison D1D04-3*...
D1L	Vickers D1L...
DG4M4	Vickers DG4M4... Tokimec DG4M4...

Port Orientation

AB	A_v common to A_m B_v common to B_m (D1D04 and D1L)
BA	B_v common to A_m A_v common to B_m (DG4M4 only)

Valve Pattern

D03	ISO 4401-03-02 NFPA T3.5.1-D03 See Tech Information

Product Type

VA	Valve Adaptor

Daman Products Company, Inc. • 1811 North Home Street • Mishawaka, IN 46545-7267
Tel: 800.959.7841 574.259.7841 • Fax: 800.241.7664 • Email: sales@daman.com • www.daman.com

D03 to "Obsolete Valve" Adaptors

Adapt D03 valve to Republic R8143 manifold

Valve mtg: UNC #10-24 x 0.63 [16] DP
Adaptor mounting hardware is supplied.
See page 109 for itemized list.

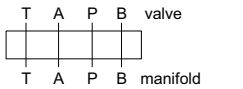

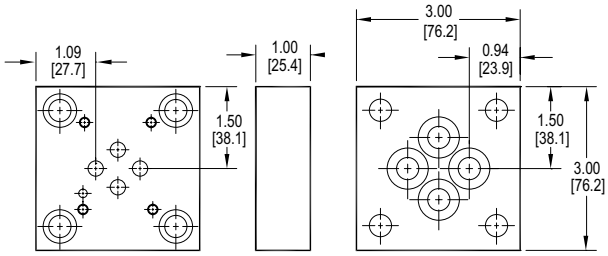

Adapt D03 valve to Rivett RVT65 manifold

Adaptor interface seal kit is supplied.
See page 109 for itemized list.

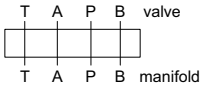

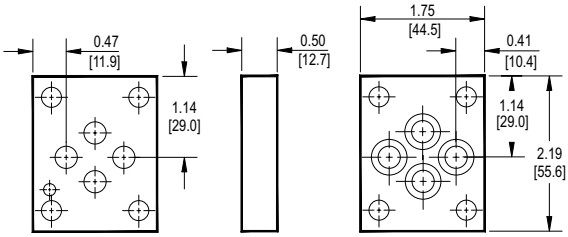

Adapt D03 valve to Rexroth WE5 manifold

Valve mtg: UNC #10-24 x 0.63 [16] DP
Adaptor mounting hardware is supplied.
See page 109 for itemized list.

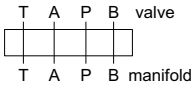

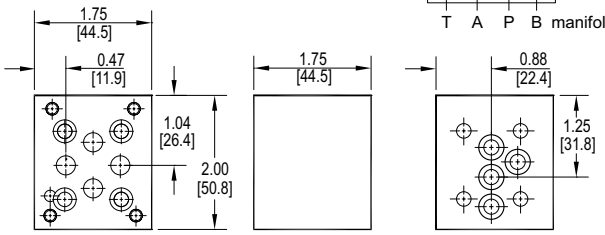

Specifications, descriptions, and dimensional data are subject to correction or change without notice or incurring obligation. Download latest catalog page revisions at www.daman.com.

Ordering Information

Material	Valve Pattern	Manifold Pattern	Product Type	Port Orientation

For **coating options** see pages 245-246.

Material

A	Aluminum - 6061-T6 3000† psi • 20.7 MPa
D	Ductile Iron - D4512 5000† psi • 34.5 MPa

† Working pressure should be considered in accordance with ISO 4413 to determine appropriate material type.

Manifold Pattern
See Tech Information

R8143	Republic R-8143...
RVT65	Rivett 65**-01-70 Parker D1RW
WE5	Rexroth WE5...

Port Orientation

AB	A_v common to A_m B_v common to B_m

Valve Pattern

D03	ISO 4401-03-02 NFPA T3.5.1-D03 See Tech Information

Product Type

VA	Valve Adaptor

Daman Products Company, Inc. • 1811 North Home Street • Mishawaka, IN 46545-7267
Tel: 800.959.7841 574.259.7841 • Fax: 800.241.7664 • Email: sales@daman.com • www.daman.com

D05 to "Obsolete Valve" Adaptors

Adapt D05 valve to Denison D1D04 manifold

Adaptor interface seal kit is supplied.
See page 109 for itemized list.

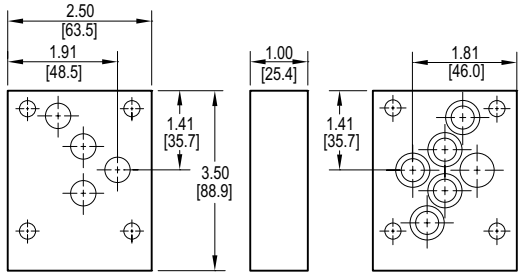

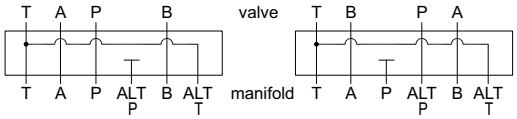

Schematic of typical installation. Replaces D1D04 valves that utilized the standard P port.

Schematic of optional installation. Replaces D1D04 pilot valves that utilized the alternate P port. The adaptor is rotated 180° in this case, which swaps A & B orientation.

Adapt D05 valve to D06 manifold (Vickers DG4S4-02)

Valve mtg: UNC 0.25-20 x 0.56 [14.2] DP
Adaptor mounting hardware is supplied.
See page 109 for itemized list.

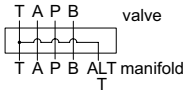

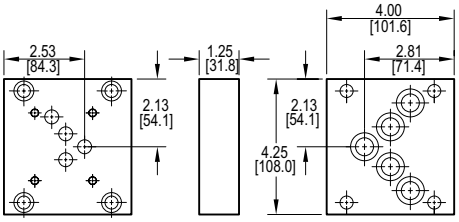

Adapt D05 valve to Denison DD063 manifold

Valve mtg: UNC 0.25-20 x 0.75 [19.1] DP
Adaptor mounting hardware is supplied.
See page 109 for itemized list.

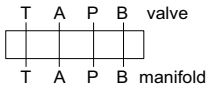

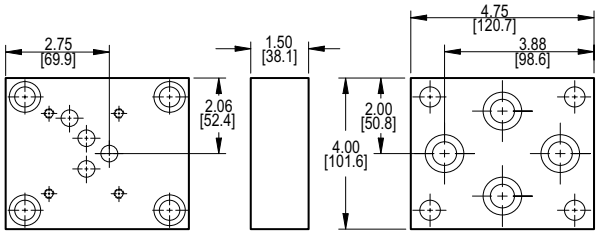

Specifications, descriptions, and dimensional data are subject to correction or change without notice or incurring obligation. Download latest catalog page revisions at www.daman.com.

Ordering Information

Material	Valve Pattern	Manifold Pattern	Product Type	Port Orientation

For **coating options** see pages 245-246.

Material

A	Aluminum - 6061-T6 3000† psi • 20.7 MPa
D	Ductile Iron - D4512 5000† psi • 34.5 MPa

† Working pressure should be considered in accordance with ISO 4413 to determine appropriate material type.

Manifold Pattern
See Tech Information

D06	Vickers DG4S4-02 NFPA T3.5.1-D06
D1D04	Denison D1D04-3...
DD063	Denison DD063...

Port Orientation

AB	A_v common to A_m B_v common to B_m

Valve Pattern

D05	ISO 4401-05-04 NFPA T3.5.1-D05 See Tech Information

Product Type

VA	Valve Adaptor

Daman Products Company, Inc. • 1811 North Home Street • Mishawaka, IN 46545-7267
Tel: 800.959.7841 574.259.7841 • Fax: 800.241.7664 • Email: sales@daman.com • www.daman.com

D08 to “Obsolete Valve” Adaptors

Adapt D08 valve to Denison D1D12 manifold

Valve mtg: (2) UNC 0.50-13 x 0.75 [19.1] DP
Adaptor mounting hardware is supplied.*
See page 109 for itemized list.
* (4) bolts are user supplied; bolts must pass through valve and adaptor to thread into manifold.

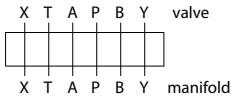

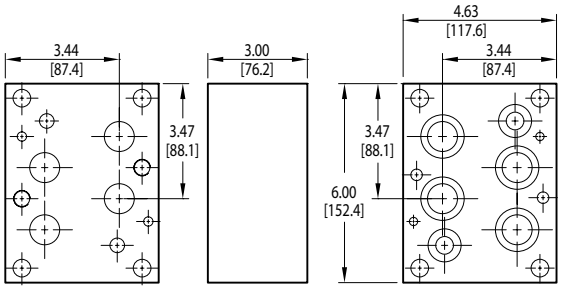

Adapt D08 valve to Denison D2D06 manifold

Valve mtg: UNC 0.50-13 x 1.19 [30.2] DP
Adaptor mounting hardware is supplied.
See page 109 for itemized list.

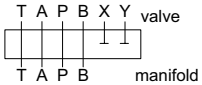

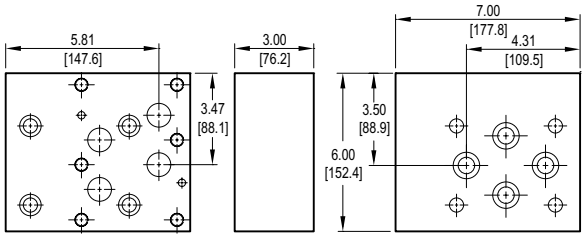

Specifications, descriptions, and dimensional data are subject to correction or change without notice or incurring obligation. Download latest catalog page revisions at www.daman.com.

Ordering Information

Material	Valve Pattern	Manifold Pattern	Product Type	Port Orientation

For **coating options** see pages 245-246.

Material

A	Aluminum - 6061-T6 3000† psi • 20.7 MPa
D	Ductile Iron - D4512 5000† psi • 34.5 MPa

† Working pressure should be considered in accordance with ISO 4413 to determine appropriate material type.

Valve Pattern

D08	ISO 4401-08-07 NFPA T3.5.1-D08 See Tech Information

Manifold Pattern

See Tech Information

D1D12	Denison D1D12-3...
D2D06	Denison D2D06...

Product Type

VA	Valve Adaptor

Port Orientation

AB	A_v common to A_m B_v common to B_m

Daman Products Company, Inc. • 1811 North Home Street • Mishawaka, IN 46545-7267
Tel: 800.959.7841 574.259.7841 • Fax: 800.241.7664 • Email: sales@daman.com • www.daman.com

D10 to “Obsolete Valve” Adaptors

Adapt D10 valve to Denison D1D24 manifold

Valve mtg: (2) UNC 0.75-10 x 1.12 [28.4] DP
Adaptor mounting hardware is supplied.*
See page 109 for itemized list.
* (4) bolts are user supplied; must pass through valve and adaptor to thread into manifold.

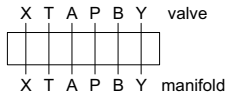

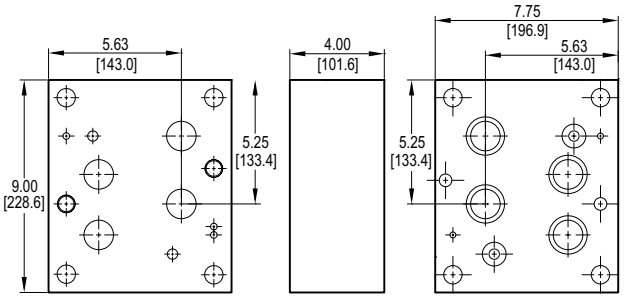

Specifications, descriptions, and dimensional data are subject to correction or change without notice or incurring obligation. Download latest catalog page revisions at www.daman.com.

Ordering Information

Material	Valve Pattern	Manifold Pattern	Product Type	Port Orientation

For **coating options** see pages 245-246.

Material

A	Aluminum - 6061-T6 3000† psi • 20.7 MPa
D	Ductile Iron - D4512 5000† psi • 34.5 MPa

† Working pressure should be considered in accordance with ISO 4413 to determine appropriate material type.

Manifold Pattern
See Tech Information

D1D24	Denison D1D24-3...

Port Orientation

AB	A_v common to A_m B_v common to B_m

Valve Pattern

D10	ISO 4401-10-08 NFPA T3.5.1-D10 See Tech Information

Product Type

VA	Valve Adaptor

Daman Products Company, Inc. • 1811 North Home Street • Mishawaka, IN 46545-7267
Tel: 800.959.7841 574.259.7841 • Fax: 800.241.7664 • Email: sales@daman.com • www.daman.com

Daman®

Valve Adaptor Mounting Hardware

Part no.	Cat. pg.	Viton O-rings 90 durometer	Mounting Screws	Locating Pins	Plugs
* D02 D03 VA AB	88	(4) -012	(4) UNC #10-24 x 0.88 long SHCS	(1) 0.12 dia x 0.25 long	n/a
* D05 D03 VA AB A	88	(4) -012	(4) UNC #10-24 x 1.50 long SHCS		
* D05 D03 VA AB B	88	(4) -012	(4) UNC #10-24 x 0.75 long SHCS		
* S04 D03 VA BA	88	(4) -012	(4) UNC #10-24 x 1.00 long SHCS		
* D03 D03 VA BA	89	(4) -012	n/a		
* D03 D03 VA AB 090	90	(4) -012	(4) UNC #10-24 x 1.50 long SHCS	(1) 0.12 dia x 0.25 long	n/a
* D03 D03 VA AB 180	90	(4) -012	(4) UNC #10-24 x 2.00 long SHCS		
* D03 D03 VA AB 270	90	(4) -012	(4) UNC #10-24 x 1.50 long SHCS		
* D02 D03 VA AB M	88	(4) -012	(4) ISO 6H M5-0.8 x 20mm SHCS	(1) 0.12 dia x 0.25 long	n/a
* D05 D03 VA AB A M	88	(4) -012	(4) ISO 6H M5-0.8 x 40mm SHCS		
* D05 D03 VA AB B M	88	(4) -012	(4) ISO 6H M5-0.8 x 20mm SHCS		
* S04 D03 VA BA M	88	(4) -012	(4) ISO 6H M5-0.8 x 25mm SHCS		
* D03 D03 VA BA M	89	(4) -012	n/a		
* D03 D05 VA AB	91	(5) -014	(4) UNC 0.25-20 x 1.25 long SHCS	n/a	n/a
* D03 D05 VA BA	91	(5) -014	(4) UNC 0.25-20 x 0.75 long SHCS		
* S04 D05 VA AB	91	(5) -014	(4) UNC 0.25-20 x 1.50 long SHCS		
* D03 D05 VA AB M	91	(5) -014	(4) ISO 6H M6-1.0 x 35mm SHCS	n/a	n/a
* D03 D05 VA BA M	91	(5) -014	(4) ISO 6H M6-1.0 x 20mm SHCS		
* S04 D05 VA AB M	91	(5) -014	(4) ISO 6H M6-1.0 x 40mm SHCS		
* D03 D05H VA AB	92	(1) -011, (6) -014, (1) -016	(4) UNC 0.25-20 x 1.50 long SHCS	n/a	n/a
* D05HE D05H VA AB	92	(2) -011, (5) -014	n/a		
* D05H D05HE VA AB	92	(7) -014	n/a		
* D03 D05H VA AB M	92	(1) -011, (6) -014, (1) -016	(4) ISO 6H M6-1.0 x 35mm SHCS	n/a	n/a
* D05HE D05H VA AB M	92	(2) -011, (5) -014	n/a		
* D05H D05HE VA AB M	92	(7) -014	n/a		
* I06 D05H RVA	93	(1) -011, (6) -014, (1) -016	(4) UNC 0.25-20 x 1.50 long SHCS	n/a	(1) 0.25 NPTF LSPP
* P06 D05H RVA	93	(1) -011, (6) -014, (1) -016	(4) UNC 0.25-20 x 1.50 long SHCS		
* I06 D05H RVA M	93	(1) -011, (6) -014, (1) -016	(4) ISO 6H M6-1.0 x 40mm SHCS	n/a	n/a
* P06 D05H RVA M	93	(1) -011, (6) -014, (1) -016	(4) ISO 6H M6-1.0 x 40mm SHCS		
* D03 D06 VA AB	94	(5) -018	(4) UNC 0.38-16 x 1.25 long SHCS	n/a	n/a
* D05 D06 VA AB	94	(5) -018	(4) UNC 0.38-16 x 1.25 long SHCS		
* D05H D06H VA AB	94	(7) -018	(4) UNC 0.38-16 x 2.00 long SHCS		
* D03 D07 VA AB	95	(2) -011, (4) -210	(2) UNC 0.25-20 x 1.25 long and (4) UNC 0.38-16 x 1.25 long SHCS	(2) 0.12 dia x 0.25 long	n/a
* D05 D07 VA AB	95	(2) -011, (4) -210	(4) UNC 0.38-16 x 1.25 long SHCS		
* D05H D07 VA AB	95	(2) -011, (4) -210	(4) UNC 0.38-16 x 1.25 long SHCS		
* D05HE D07 VA AB	95	(3) -011, (1) -014, (4) -210	(2) UNC 0.25-20 x 1.50 long and (4) UNC 0.38-16 x 1.50 long SHCS		
* D08 D07 VA AB	96	(2) -011, (4) -210	(2) UNC 0.25-20 x 3.00 long and (4) UNC 0.38-16 x 3.00 long SHCS		
* D03 D07 VA AB M	95	(2) -011, (4) -210	(2) ISO 6H M6-1.0 x 35mm and (4) ISO 6H M10-1.5 x 35mm SHCS	(2) 0.12 dia x 0.25 long	n/a
* D05 D07 VA AB M	95	(2) -011, (4) -210	(4) ISO 6H M10-1.5 x 35mm SHCS		
* D05H D07 VA AB M	95	(2) -011, (4) -210	(4) ISO 6H M10-1.5 x 35mm SHCS		
* D05HE D07 VA AB M	95	(3) -011, (1) -014, (4) -210	(2) ISO 6H M6-1.0 x 40mm and (4) ISO 6H M10-1.5 x 40mm SHCS		
* D08 D07 VA AB M	96	(2) -011, (4) -210	(2) ISO 6H M6-1.0 x 75mm and (4) ISO 6H M10-1.5 x 75mm SHCS		

Daman Products Company, Inc. • 1811 North Home Street • Mishawaka, IN 46545-7267
Tel: 800.959.7841 574.259.7841 • Fax: 800.241.7664 • Email: sales@daman.com • www.daman.com

Valve Adaptor Mounting Hardware

Part no.	Cat. pg.	Viton O-rings 90 durometer	Mounting Screws	Locating Pins	Plugs
* D03 D08 VA AB	97	(2) -210, (4) -215	(6) UNC 0.50-13 x 1.50 long SHCS	(2) 0.25 dia x 0.50 long	n/a
* D05 D08 VA AB	97	(2) -210, (4) -215	(6) UNC 0.50-13 x 1.50 long SHCS		
* D05H D08 VA AB	97	(2) -210, (4) -215	(4) UNC 0.50-13 x 2.00 long SHCS		
* D05HE D08 VA AB	97	(2) -210, (4) -215	(6) UNC 0.50-13 x 1.50 long SHCS		
* D06 D08 VA AB	98	(2) -210, (4) -215	(4) UNC 0.50-13 x 2.00 long SHCS		
* D07 D08 VA AB	98	(2) -210, (4) -215	(4) UNC 0.50-13 x 1.50 long SHCS		
* D03 D08 VA AB M	97	(2) -210, (4) -215	(6) ISO 6H M12-1.75 x 40mm SHCS	(2) 0.25 dia x 0.50 long	n/a
* D05 D08 VA AB M	97	(2) -210, (4) -215	(6) ISO 6H M12-1.75 x 40mm SHCS		
* D05H D08 VA AB M	97	(2) -210, (4) -215	(4) ISO 6H M12-1.75 x 50mm SHCS		
* D05HE D08 VA AB M	97	(2) -210, (4) -215	(6) ISO 6H M12-1.75 x 40mm SHCS		
* D06 D08 VA AB M	98	(2) -210, (4) -215	(4) ISO 6H M12-1.75 x 50mm SHCS		
* D07 D08 VA AB M	98	(2) -210, (4) -215	(4) ISO 6H M12-1.75 x 40mm SHCS		
* I08 D08 RVA	99	(2) -210, (4) -215	(6) UNC 0.50-13 x 2.00 long SHCS	(2) 0.25 dia x 0.50 long	(1) 0.25 NPTF LSPP
* P08 D08 RVA	99	(2) -210, (4) -215	(6) UNC 0.50-13 x 2.00 long SHCS	(2) 0.25 dia x 0.50 long	n/a
* R08 D08 RVA	99	(2) -210, (4) -215	(6) UNC 0.50-13 x 2.00 long SHCS	(2) 0.25 dia x 0.50 long	(1) 0.25 NPTF LSPP
* I08 D08 RVA M	99	(2) -210, (4) -215	(6) ISO 6H M12-1.75 x 50mm SHCS	(2) 0.25 dia x 0.50 long	n/a
* P08 D08 RVA M	99	(2) -210, (4) -215	(6) ISO 6H M12-1.75 x 50mm SHCS	(2) 0.25 dia x 0.50 long	
* R08 D08 RVA M	99	(2) -210, (4) -215	(6) ISO 6H M12-1.75 x 50mm SHCS	(2) 0.25 dia x 0.50 long	
* D07 D10 VA AB	100	(2) -210, (4) -222	(6) UNC 0.75-10 x 3.00 SHCS	(2) 0.25 dia x 0.50 long	n/a
* D08 D10 VA AB	100	(2) -210, (4) -222	(6) UNC 0.75-10 x 3.00 SHCS	(2) 0.25 dia x 0.50 long	
* D07 D10 VA AB M	100	(2) -210, (4) -222	(6) ISO 6H M20-2.5 x 80mm SHCS	(2) 0.25 dia x 0.50 long	n/a
* D08 D10 VA AB M	100	(2) -210, (4) -222	(6) ISO 6H M20-2.5 x 80mm SHCS	(2) 0.25 dia x 0.50 long	
* D03 S04 VA BA	101	(4) -013	(4) UNC 0.31-18 x 1.00 long SHCS	(2) 0.09 dia x 0.25 long	n/a
* D05 S04 VA AB	101	(4) -013	(4) UNC 0.31-18 x 1.50 long SHCS	(2) 0.09 dia x 0.25 long	
* D03 S04 VA BA M	101	(4) -013	(4) ISO 6H M8-1.25 x 25mm SHCS	(2) 0.09 dia x 0.25 long	n/a
* D05 S04 VA AB M	101	(4) -013	(4) ISO 6H M8-1.25 x 40mm SHCS	(2) 0.09 dia x 0.25 long	
* D03 01Q VA AB	102	(4) -012	(4) UNC #10-24 x 1.00 long SHCS	(1) 0.12 dia x 0.25 long	n/a
* D03 01S VA AB	102	(4) -012	(4) UNC 0.25-20 x 1.25 long SHCS	(1) 0.12 dia x 0.25 long	
* D03 D1B VA AB	102	(4) -010	(4) UNF #10-32 x 1.00 long SHCS	n/a	
* D03 D1D04 VA AB	103	(6) -013	(4) UNC 0.25-20 x 1.50 long SHCS	n/a	n/a
* D03 D1L VA AB	103	(4) -008	(4) UNC #10-24 x 1.75 long SHCS	n/a	
* D03 DG4M4 VA BA	103	(4) -011	(4) UNC 0.25-20 x 1.50 long SHCS	(1) 0.12 dia x 0.25 long	
* D03 R8143 VA AB	104	(4) -016	(4) UNC 0.38-16 x 1.00 long SHCS	n/a	n/a
* D03 RVT65 VA AB	104	(4) -012	n/a	n/a	
* D03 WE5 VA AB	104	(4) -010	(4) UNC #10-24 x 1.75 long SHCS	n/a	
* D05 D06 VA AB	105	(5) -018	(4) UNC 0.38-16 x 1.25 long SHCS	n/a	n/a
* D05 D1D04 VA AB	105	(6) -013	n/a	n/a	
* D05 DD063 VA AB	105	(4) -210	(4) UNC 0.50-13 x 1.50 long SHCS	n/a	
* D08 D1D12 VA AB	106	(2) -210, (4) -215	(2) UNC 0.31-18 x 1.00 long SHCS	(2) 0.25 dia x 0.50 long	n/a
* D08 D2D06 VA AB	106	(4) -210	(4) UNC 0.50-13 x 3.00 long SHCS	n/a	
* D10 D1D24 VA AB	107	(2) -210, (4) -222	(2) UNC 0.50-13 x 1.50 long SHCS	(2) 0.25 dia x 0.50 long	

Daman Products Company, Inc. • 1811 North Home Street • Mishawaka, IN 46545-7267
Tel: 800.959.7841 574.259.7841 • Fax: 800.241.7664 • Email: sales@daman.com • www.daman.com

DRIVING EXCEPTIONAL PERFORMANCE

DAMAN MANIFOLDS

- Fast turnaround custom manifold design and manufacturing
- Next day shipping for custom manifolds with Daman's Trigger fulfillment system
- Specialty manifolds: surface-treated, stainless steel and large manifolds up to 4,000 lbs.
- Next day shipping for complete line of in-stock standard manifolds
- Expert design services

Daman®

SUBPLATES

D02 Subplates	Page 114
D03 Subplates	Pages 115-118
D05 Subplates	Pages 119-125
D07 Subplates	Pages 126-127
D08 Subplates	Pages 128-129
D10 Subplates	Page 130
2F06, 2F07 Subplates	Page 131
P06, P08, P10 Subplates	Page 132
R06, R08, R10 Subplates	Page 133
I08, I10 Subplates	Page 133
Mounting Hardware	Pages 134-136

Daman®

Subplates

The pages in this section are our standard product offerings for subplates. If you need a custom subplate solution please visit **www.daman.com** for Request For Quote (RFQ) instructions.

Daman Products Company, Inc. • 1811 North Home Street • Mishawaka, IN 46545-7267
Tel: 800.959.7841 574.259.7841 • Fax: 800.241.7664 • Email: sales@daman.com • www.daman.com

D02 Subplates

Side Ported Subplate

Valve mtg: UNC #10-24 x 0.56 DP or
Metric M5-0.8mm ISO 6H x [14] DP
Subplate hardware kit is supplied.
See page 134 for itemized list.

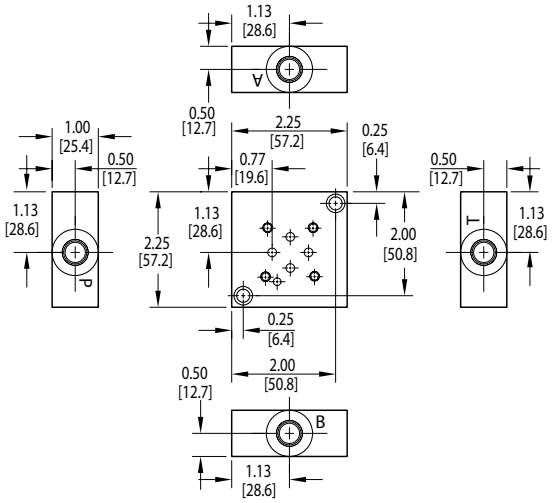

Back Ported Subplate

Valve mtg: UNC #10-24 x 0.56 DP or
Metric M5-0.8mm ISO 6H x [14] DP
Subplate mounting hardware is supplied.
See page 134 for itemized list.

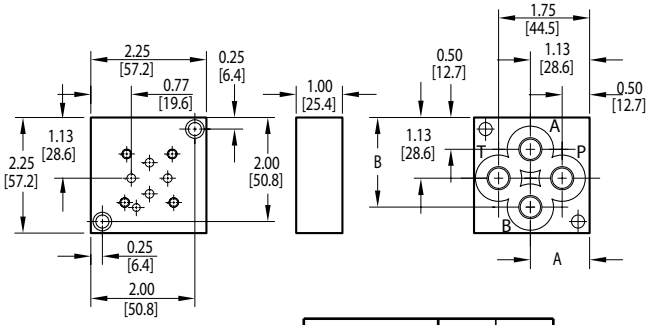

Dimension	A	B
*D02SPB4P *D02SPB4T	1.22 [31.0]	1.88 [47.6]
*D02SPB4S *D02SPB4B *D02SPB4M	1.13 [28.6]	1.75 [44.5]

Specifications, descriptions, and dimensional data are subject to correction or change without notice or incurring obligation. Download latest catalog page revisions at www.daman.com.

Ordering Information

Material	Valve Pattern	Product Type	Port Location	Port Threads

For **coating options** see pages 245-246.

Material

A	Aluminum - 6061-T6 3000† psi • 20.7 MPa
D	Ductile Iron - D4512 5000† psi • 34.5 MPa

† Working pressure should be considered in accordance with ISO 4413 to determine appropriate material type.

Product Type

SP	Subplate

Port Threads

4P	0.25-18 NPTF ANSI B1.20.3
4S	-4 SAE ISO 11926; SAE 1926
4B	0.25-19 BSPP ISO 1179; BS 2779
4M	M10 x 1.0 ISO 6149
4T	0.25-19 BSPT ISO 7; BS 21

Port Location

S	Side ported
B	Back Ported

Valve Pattern

D02	ISO 4401-02-01 NFPA T3.5.1-D02 See Tech Information

Daman Products Company, Inc. • 1811 North Home Street • Mishawaka, IN 46545-7267
Tel: 800.959.7841 574.259.7841 • Fax: 800.241.7664 • Email: sales@daman.com • www.daman.com

D03 Subplates

Side Ported Subplate

Valve mtg: UNC #10-24 x 0.63 DP or
Metric M5-0.8mm ISO 6H x [16] DP
Subplate hardware kit is supplied.
See page 134 for itemized list.

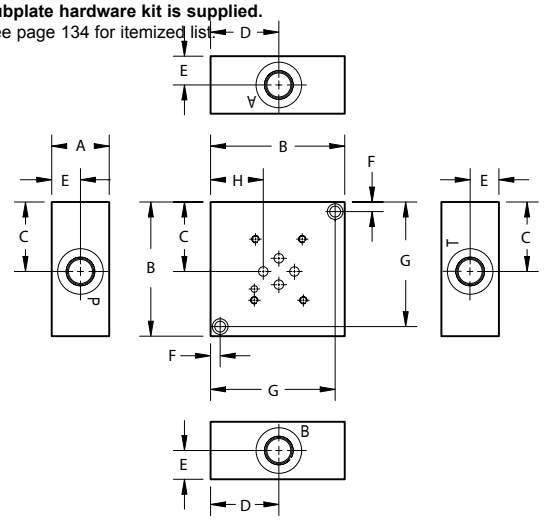

Dimension	A	B	C	D	E	F	G	H
*D03SPS4P *D03SPS6*	1.00 [25.4]	2.50 [63.5]	1.31 [33.3]	1.25 [31.8]	0.50 [12.7]	0.25 [6.4]	2.25 [57.2]	0.88 [22.4]
D03SPS8	1.50 [38.1]	3.50 [88.9]	1.81 [46.0]	1.78 [45.2]	0.75 [19.1]	0.25 [6.4]	3.25 [82.6]	1.38 [34.9]
D03SPS12	1.75 [44.5]	4.00 [101.6]	2.06 [52.4]	2.03 [51.6]	0.88 [22.2]	0.38 [9.5]	3.63 [92.1]	1.63 [41.3]

Back Ported Subplate

Valve mtg: UNC #10-24 x 0.63 DP or
Metric M5-0.8mm ISO 6H x [16] DP
Subplate hardware kit is supplied.
See page 134 for itemized list.

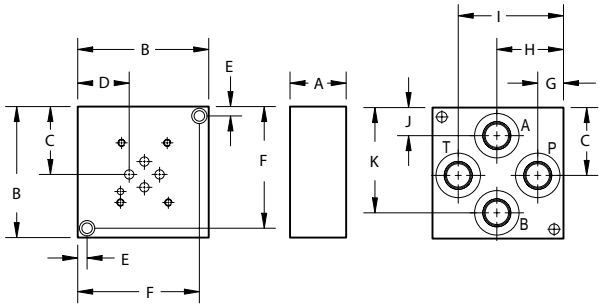

Dimension	A	B	C	D	E	F	G	H	I	J	K
*D03SPB4P	1.00 [25.4]	2.50 [63.5]	1.31 [33.3]	0.88 [22.4]	0.25 [6.4]	2.25 [57.2]	0.66 [16.7]	1.28 [32.5]	1.91 [48.4]	0.75 [19.1]	1.88 [47.6]
*D03SPB6B	1.00 [25.4]	2.50 [63.5]	1.25 [31.8]	0.84 [21.4]	0.25 [6.4]	2.25 [57.2]	0.51 [13.0]	1.25 [31.8]	1.98 [50.4]	0.52 [13.2]	1.97 [50.0]
*D03SPB6[M,P,S,T]	1.00 [25.4]	2.50 [63.5]	1.31 [33.3]	0.88 [22.4]	0.25 [6.4]	2.25 [57.2]	0.59 [15.1]	1.28 [32.5]	1.97 [50.0]	0.69 [17.5]	1.94 [49.2]
D03SPB8	1.50 [38.1]	3.50 [88.9]	1.81 [46.0]	1.38 [34.9]	0.25 [6.4]	3.25 [82.6]	0.69 [17.5]	1.78 [45.2]	2.81 [71.4]	0.75 [19.1]	2.81 [71.4]
D03SPB12	1.50 [38.1]	4.50 [114.3]	2.31 [58.8]	1.88 [47.6]	0.38 [9.5]	4.13 [104.8]	0.94 [23.8]	2.28 [57.9]	3.56 [90.5]	0.94 [23.8]	3.56 [90.5]

Specifications, descriptions, and dimensional data are subject to correction or change without notice or incurring obligation. Download latest catalog page revisions at www.daman.com.

Ordering Information

Material	Valve Pattern	Product Type	Port Location	Port Threads

For **coating options** see pages 245-246.

Material

A	Aluminum - 6061-T6 3000† psi • 20.7 MPa
D	Ductile Iron - D4512 5000† psi • 34.5 MPa

† Working pressure should be considered in accordance with ISO 4413 to determine appropriate material type.

Valve Pattern

D03	ISO 4401-03-02 NFPA T3.5.1-D03 See Tech Information

Product Type

SP	Subplate

Port Location

S	Side ported
B	Back Ported

Port Threads

4P	0.25-18 NPTF ANSI B1.20.3				
6P	0.38-18 NPTF ANSI B1.20.3	**8P**	0.50-14 NPTF ANSI B1.20.3	**12P**	0.75-14 NPTF ANSI B1.20.3
6S	-6 SAE ISO 11926; SAE 1926	**8S**	-8 SAE ISO 11926; SAE 1926	**12S**	-12 SAE ISO 11926; SAE 1926
6B	0.38-19 BSPP ISO 1179; BS 2779	**8B**	0.50-14 BSPP ISO 1179; BS 2779	**12B**	0.75-14 BSPP ISO 1179; BS 2779
6M	M14 x 1.5 ISO 6149	**8M**	M18 x 1.5 ISO 6149	**12M**	M27 x 2.0 ISO 6149
6T	0.38-19 BSPT ISO 7; BS 21	**8T**	0.50-14 BSPT ISO 7; BS 21	**12T**	0.75-14 BSPT ISO 7; BS 21

Daman Products Company, Inc. • 1811 North Home Street • Mishawaka, IN 46545-7267
Tel: 800.959.7841 574.259.7841 • Fax: 800.241.7664 • Email: sales@daman.com • www.daman.com

D03 Subplates

Dual Ported Subplate

Valve mtg: UNC #10-24 x 0.50 DP or
Metric M5-0.8mm ISO 6H x [12.7] DP
Subplate hardware kit is supplied.
See page 134 for itemized list.

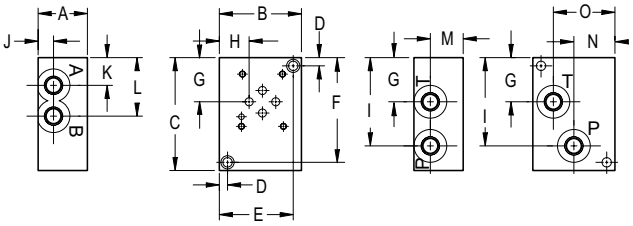

Dimension	A	B	C	D	E	F	G	H
D03SPSB6	1.50 [38.1]	2.50 [63.5]	3.44 [87.4]	0.25 [6.4]	2.25 [57.2]	3.19 [81.0]	1.34 [34.0]	0.91 [23.1]
D03SPSB8	2.00 [50.8]	2.75 [69.9]	3.75 [95.3]	0.25 [6.4]	2.50 [63.5]	3.50 [88.9]	1.34 [34.0]	0.91 [23.1]

Dimension	I	J	K	L	M	N	O
*D03SPSB6B	2.69 [68.3]	0.50 [12.7]	0.72 [18.3]	1.78 [45.2]	1.00 [25.4]	1.25 [31.8]	1.88 [47.8]
*D03SPSB6[M,P,S,T]	2.69 [68.3]	0.47 [11.9]	0.84 [21.4]	1.78 [45.2]	1.00 [25.4]	1.25 [31.8]	1.88 [47.8]
*D03SPSB8B	3.00 [76.2]	0.88 [22.2]	0.69 [17.5]	1.97 [50.0]	1.38 [34.9]	1.44 [36.5]	1.94 [49.2]
*D03SPSB8[M,P,S,T]	3.00 [76.2]	0.88 [22.2]	0.69 [17.5]	1.94 [49.2]	1.38 [34.9]	1.44 [36.5]	1.94 [49.2]

Motor Mounted Subplate

Available with NPTF or SAE ports only.
Valve mtg: UNC #10-24 x 0.63 DP
Subplate hardware kit is supplied.
See page 134 for itemized list.

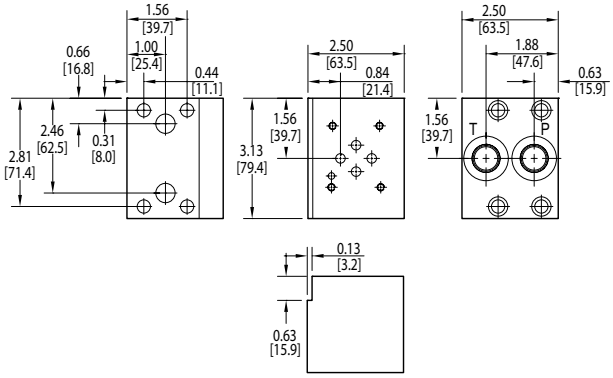

Specifications, descriptions, and dimensional data are subject to correction or change without notice or incurring obligation. Download latest catalog page revisions at www.daman.com.

Ordering Information

Material	Valve Pattern	Product Type	Port Location	Port Threads

For **coating options** see pages 245-246.

Material

A	Aluminum - 6061-T6 3000† psi • 20.7 MPa
D	Ductile Iron - D4512 5000† psi • 34.5 MPa

† Working pressure should be considered in accordance with ISO 4413 to determine appropriate material type.

Valve Pattern

D03	ISO 4401-03-02 NFPA T3.5.1-D03 See Tech Information

Product Type

SP	Subplate

Port Location

SB	Side P,A,B,T ports Back P & T ports
M	Motor mounting 8P or 8S ports only

Port Threads

Port location SB only		Port location SB or M	
6P	0.38-18 NPTF ANSI B1.20.3	**8P**	0.50-14 NPTF ANSI B1.20.3
6S	-6 SAE ISO 11926; SAE 1926	**8S**	-8 SAE ISO 11926; SAE 1926
6B	0.38-19 BSPP ISO 1179; BS 2779	Port location SB only	
6M	M14 x 1.5 ISO 6149	**8B**	0.50-14 BSPP ISO 1179; BS 2779
6T	0.38-19 BSPT ISO 7; BS 21	**8M**	M18 x 1.5 ISO 6149
		8T	0.50-14 BSPT ISO 7; BS 21

Daman Products Company, Inc. • 1811 North Home Street • Mishawaka, IN 46545-7267
Tel: 800.959.7841 574.259.7841 • Fax: 800.241.7664 • Email: sales@daman.com • www.daman.com

D03 Subplates with Relief Cavity

Dual Ported Subplate with Main Relief Cavity

Valve mtg: UNC #10-24 x 0.63 DP or
Metric M5-0.8mm ISO 6H x [16] DP
Subplate hardware kit is supplied.
See page 134 for itemized list.

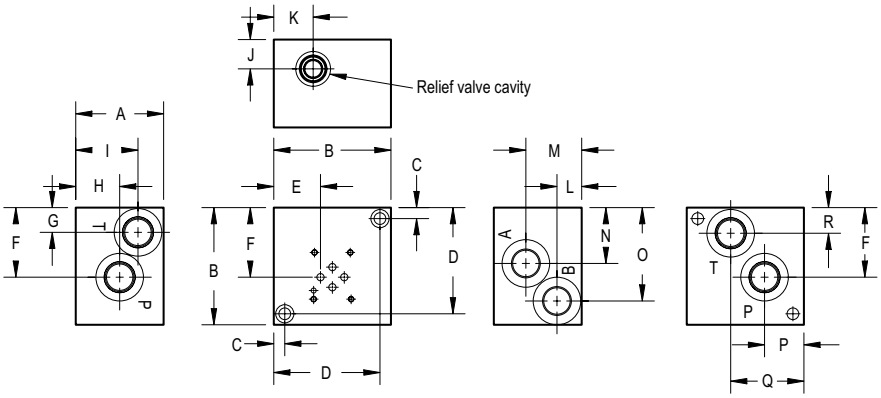

Dimension	A	B	C	D	E	F	G	H	I	J	K	L	M	N	O	P	Q	R
*D03SPRV*6*	2.25 [57.2]	3.00 [76.2]	0.31 [7.9]	2.69 [68.3]	0.97 [24.6]	2.00 [50.8]	0.69 [17.5]	1.66 [42.1]	1.66 [42.1]	0.88 [22.2]	0.84 [21.3]	0.88 [22.2]	1.63 [41.3]	1.53 [38.9]	2.37 [60.2]	0.97 [24.6]	1.69 [42.9]	0.69 [17.5]
*D03SPRV*8*	3.00 [76.2]	3.50 [88.9]	0.38 [9.5]	3.12 [79.4]	1.34 [34.1]	2.19 [55.6]	0.81 [20.6]	1.50 [38.1]	2.00 [50.8]	1.00 [25.4]	1.09 [22.8]	0.84 [21.4]	1.91 [48.4]	1.72 [43.6]	2.53 [64.3]	1.09 [22.8]	2.25 [57.2]	0.81 [20.6]
*D03SPRV*12*	3.00 [76.2]	4.00 [101.6]	0.38 [9.5]	3.63 [92.1]	1.59 [40.5]	2.38 [60.3]	0.84 [21.4]	1.50 [38.1]	2.13 [54.0]	1.00 [25.4]	1.34 [34.1]	0.84 [21.4]	1.91 [48.4]	1.91 [48.4]	3.19 [81.0]	1.34 [34.1]	2.50 [63.5]	0.88 [22.2]

Specifications, descriptions, and dimensional data are subject to correction or change without notice or incurring obligation. Download latest catalog page revisions at www.daman.com.

Ordering Information

Material	Valve Pattern	Product Type	Circuit	Relief Cavity	Port Threads

For **coating options** see pages 245-246.

Material

A	Aluminum - 6061-T6 3000† psi • 20.7 MPa
D	Ductile Iron - D4512 5000† psi • 34.5 MPa

† Working pressure should be considered in accordance with ISO 4413 to determine appropriate material type.

Product Type

SP	Subplate

Relief Cavity

C	Common cavity: C-10-2 (P in nose) For valves w/1" hex max.
S	Sun Cavity: T-10A (P in nose) See Tech Info for valves.

Port Threads

6P	0.38-18 NPTF ANSI B1.20.3	**8P**	0.50-14 NPTF ANSI B1.20.3	**12P**	0.75-14 NPTF ANSI B1.20.3
6S	-6 SAE ISO 11926; SAE 1926	**8S**	-8 SAE ISO 11926; SAE 1926	**12S**	-12 SAE ISO 11926; SAE 1926
6B	0.38-19 BSPP ISO 1179; BS 2779	**8B**	0.50-14 BSPP ISO 1179; BS 2779	**12B**	0.75-14 BSPP ISO 1179; BS 2779
6M	M14 x 1.5 ISO 6149	**8M**	M18 x 1.5 ISO 6149	**12M**	M27 x 2.0 ISO 6149
6T	0.38-19 BSPT ISO 7; BS 21	**8T**	0.50-14 BSPT ISO 7; BS 21	**12T**	0.75-14 BSPT ISO 7; BS 21

Valve Pattern

D03	ISO 4401-03-02 NFPA T3.5.1-D03 See Tech Information

Circuit

RV	Main Relief P to T

Daman Products Company, Inc. • 1811 North Home Street • Mishawaka, IN 46545-7267
Tel: 800.959.7841 574.259.7841 • Fax: 800.241.7664 • Email: sales@daman.com • www.daman.com

D03 Subplates with Relief Cavity

Side Ported Subplate with Cylinder Port
Crossover Relief Cavities

Valve mtg: UNC #10-24 x 0.63 DP or
Metric M5-0.8mm ISO 6H x [16] DP
Subplate hardware kit is supplied.
See page 134 for itemized list.

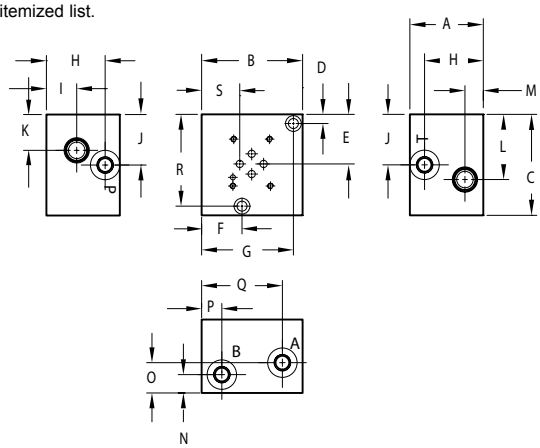

Dimension	A	B	C	D	E	F	G	H	I	J	K	L	M	N	O	P	Q	R	S
*D03SPCR*6*	2.50 [63.5]	3.50 [88.9]	3.50 [88.9]	0.31 [7.9]	1.69 [42.9]	1.41 [35.7]	3.19 [81.0]	2.00 [50.8]	1.03 [26.2]	1.72 [43.7]	1.22 [31.0]	2.22 [56.4]	0.63 [16.0]	0.63 [16.0]	1.03 [26.2]	0.69 [17.5]	2.81 [71.4]	3.19 [81.0]	1.33 [33.7]
*D03SPCR*12*	4.00 [101.6]	5.00 [127.0]	4.50 [114.3]	0.38 [9.5]	2.00 [50.8]	2.50 [63.5]	2.50 [63.5]	3.00 [76.2]	1.25 [31.8]	2.00 [50.8]	1.50 [38.1]	2.50 [63.5]	1.00 [25.4]	1.25 [31.8]	1.38 [35.1]	1.00 [25.4]	4.00 [101.6]	4.13 [104.8]	2.06 [52.8]

Specifications, descriptions, and dimensional data are subject to correction or change without notice or incurring obligation.
Download latest catalog page revisions at www.daman.com.

Ordering Information

For **coating options** see pages 245-246.

Material	Valve Pattern	Product Type	Circuit	Relief Cavity	Port Threads

Material

A	Aluminum - 6061-T6 3000† psi • 20.7 MPa
D	Ductile Iron - D4512 5000† psi • 34.5 MPa

† Working pressure should be considered in accordance with ISO 4413 to determine appropriate material type.

Product Type

SP	Subplate

Relief Cavity

C	Common cavity: C-10-2 (P in nose) For valves w/1" hex max.
S	Sun Cavity: T-10A (P in nose) See Tech Info for valves.

Port Threads

6P	0.38-18 NPTF ANSI B1.20.3	**12P**	0.75-14 NPTF ANSI B1.20.3
6S	-6 SAE ISO 11926; SAE 1926	**12S**	-12 SAE ISO 11926; SAE 1926
6B	0.38-19 BSPP ISO 1179; BS 2779	**12B**	0.75-14 BSPP ISO 1179; BS 2779
6M	M14 x 1.5 ISO 6149	**12M**	M27 x 2.0 ISO 6149
6T	0.38-19 BSPT ISO 7; BS 21	**12T**	0.75-14 BSPT ISO 7; BS 21

Valve Pattern

D03	ISO 4401-03-02 NFPA T3.5.1-D03 See Tech Information

Circuit

CR	Crossover Reliefs A to B and B to A

Daman Products Company, Inc. • 1811 North Home Street • Mishawaka, IN 46545-7267
Tel: 800.959.7841 574.259.7841 • Fax: 800.241.7664 • Email: sales@daman.com • www.daman.com

D05 Subplates

Side Ported Subplate

Valve mtg: UNC 0.25-20 x 0.75 DP or
Metric M6-1.0mm ISO 6H x [19.1] DP
Subplate hardware kit is supplied.
See page 134 for itemized list.

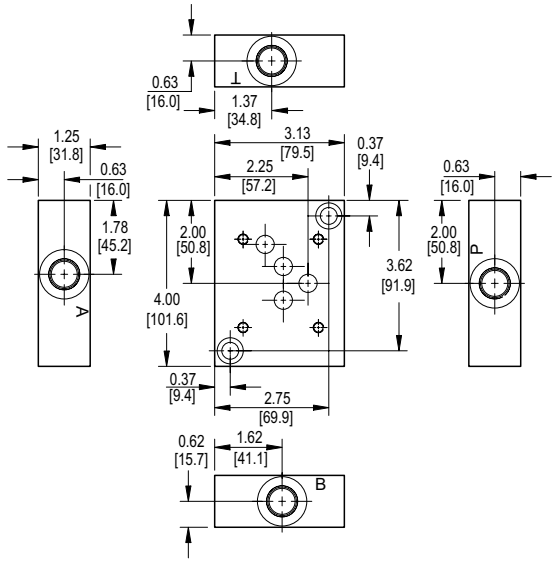

Back Ported Subplate

Valve mtg: UNC 0.25-20 x 0.75 DP or
Metric M6-1.0mm ISO 6H x [19.1] DP
Subplate hardware kit is supplied.
See page 134 for itemized list.

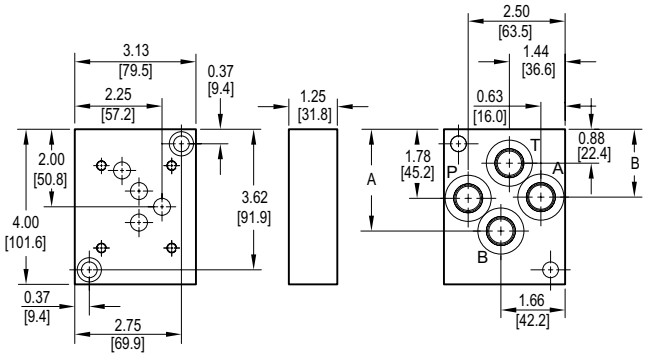

Dimension	A	B
*D05SPB6P	2.63 [66.8]	1.75 [44.5]
*D05SPB8B	2.94 [74.6]	2.00 [50.8]
*D05SPB8[M,P,S,T]	2.63 [66.8]	1.75 [44.5]

Specifications, descriptions, and dimensional data are subject to correction or change without notice or incurring obligation. Download latest catalog page revisions at www.daman.com.

Ordering Information

Material	Valve Pattern	Product Type	Port Location	Port Threads

For **coating options** see pages 245-246.

Material

A	Aluminum - 6061-T6 3000† psi • 20.7 MPa
D	Ductile Iron - D4512 5000† psi • 34.5 MPa

† Working pressure should be considered in accordance with ISO 4413 to determine appropriate material type.

Valve Pattern

D05	ISO 4401-05-04 NFPA T3.5.1-D05 See Tech Information

Product Type

SP	Subplate

Port Location

S	Side ported
B	Back Ported

Port Threads

6P	0.38-18 NPTF ANSI B1.20.3
8P	0.50-14 NPTF ANSI B1.20.3
8S	-8 SAE ISO 11926; SAE 1926
8B	0.50-14 BSPP ISO 1179; BS 2779
8M	M18 x 1.5 ISO 6149
8T	0.50-14 BSPT ISO 7; BS 21

Daman Products Company, Inc. • 1811 North Home Street • Mishawaka, IN 46545-7267
Tel: 800.959.7841 574.259.7841 • Fax: 800.241.7664 • Email: sales@daman.com • www.daman.com

D05 Subplates

Dual Ported Subplate

Valve mtg: UNC 0.25-20 x 0.56 DP or
Metric M6-1.0mm ISO 6H x [14.2] DP
Subplate hardware kit is supplied.
See page 134 for itemized list.

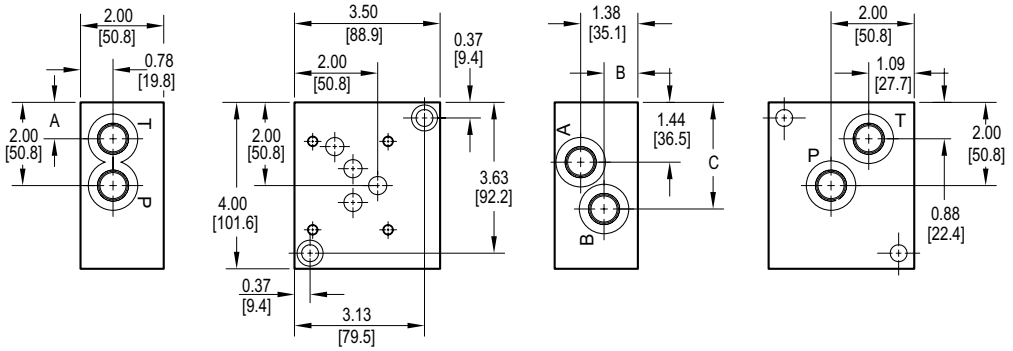

Dimension	A	B	C
*D05SPSB8B	0.66 [16.7]	0.78 [19.8]	2.81 [71.4]
*D05SPSB8[M,P,S,T]	0.88 [22.2]	1.38 [35.1]	2.56 [65.1]

Specifications, descriptions, and dimensional data are subject to correction or change without notice or incurring obligation.
Download latest catalog page revisions at www.daman.com.

Ordering Information

Material	Valve Pattern	Product Type	Port Location	Port Threads

For **coating options** see pages 245-246.

Material

A	Aluminum - 6061-T6 3000† psi • 20.7 MPa
D	Ductile Iron - D4512 5000† psi • 34.5 MPa

† Working pressure should be considered in accordance with ISO 4413 to determine appropriate material type.

Product Type

SP	Subplate

Port Threads

8P	0.50-14 NPTF ANSI B1.20.3
8S	-8 SAE ISO 11926; SAE 1926
8B	0.50-14 BSPP ISO 1179; BS 2779
8M	M18 x 1.5 ISO 6149
8T	0.50-14 BSPT ISO 7; BS 21

Port Location

SB	Side P,A,B,T ports Back P & T ports

Valve Pattern

D05	ISO 4401-05-04 NFPA T3.5.1-D05 See Tech Information

Daman Products Company, Inc. • 1811 North Home Street • Mishawaka, IN 46545-7267
Tel: 800.959.7841 574.259.7841 • Fax: 800.241.7664 • Email: sales@daman.com • www.daman.com

D05 Subplates with Relief Cavity

Dual Ported Subplate with Main Relief Cavity

Valve mtg: UNC 0.25-20 x 0.75 DP or
Metric M6-1.0mm ISO 6H x [19.1] DP
Subplate hardware kit is supplied.
See page 134 for itemized list.

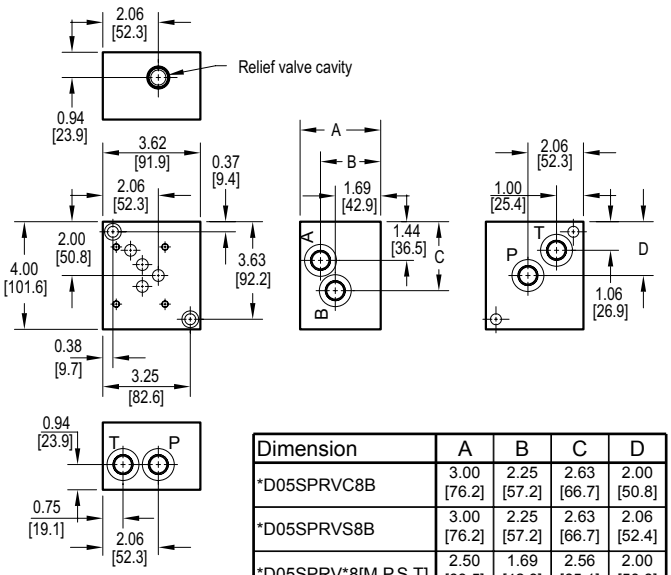

Dimension	A	B	C	D
*D05SPRVC8B	3.00 [76.2]	2.25 [57.2]	2.63 [66.7]	2.00 [50.8]
*D05SPRVS8B	3.00 [76.2]	2.25 [57.2]	2.63 [66.7]	2.06 [52.4]
*D05SPRV*8[M,P,S,T]	2.50 [63.5]	1.69 [42.9]	2.56 [65.1]	2.00 [50.8]

Side Ported Subplate with Cylinder Port Crossover Relief Cavities

Valve mtg: UNC 0.25-20 x 0.75 DP or
Metric M6-1.0mm ISO 6H x [19.1] DP
Subplate hardware kit is supplied.
See page 135 for itemized list.

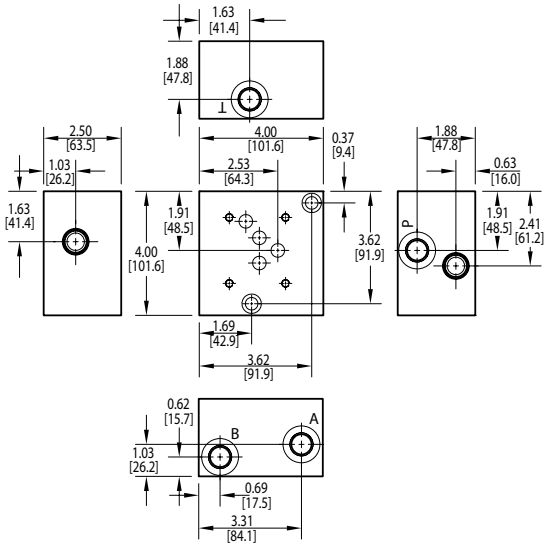

Specifications, descriptions, and dimensional data are subject to correction or change without notice or incurring obligation. Download latest catalog page revisions at www.daman.com.

Ordering Information

For **coating options** see pages 245-246.

Material	Valve Pattern	Product Type	Circuit	Relief Cavity	Port Threads

Material

A	Aluminum - 6061-T6 3000† psi • 20.7 MPa
D	Ductile Iron - D4512 5000† psi • 34.5 MPa

† Working pressure should be considered in accordance with ISO 4413 to determine appropriate material type.

Product Type

SP	Subplate

Relief Cavity

C	Common cavity: C-10-2 (P in nose) For valves w/1" hex max.
S	Sun Cavity: T-10A (P in nose) See Tech Info for valves.

Port Threads

8P	0.50-14 NPTF ANSI B1.20.3
8S	-8 SAE ISO 11926; SAE 1926
8B	0.50-14 BSPP ISO 1179; BS 2779
8M	M18 x 1.5 ISO 6149
8T	0.50-14 BSPT ISO 7; BS 21

Valve Pattern

D05	ISO 4401-05-04 NFPA T3.5.1-D05 See Tech Information

Circuit

RV	Main Relief P to T
CR	Crossover Reliefs A to B and B to A

Daman Products Company, Inc. • 1811 North Home Street • Mishawaka, IN 46545-7267
Tel: 800.959.7841 574.259.7841 • Fax: 800.241.7664 • Email: sales@daman.com • www.daman.com

D05 High Flow Subplates with Pilot Ports

Side Ported Subplate

Valve mtg: UNC 0.25-20 x 0.75 DP or
Metric M6-1.0mm ISO 6H x [19.1] DP
Subplate hardware kit is supplied.
See page 134 for itemized list.

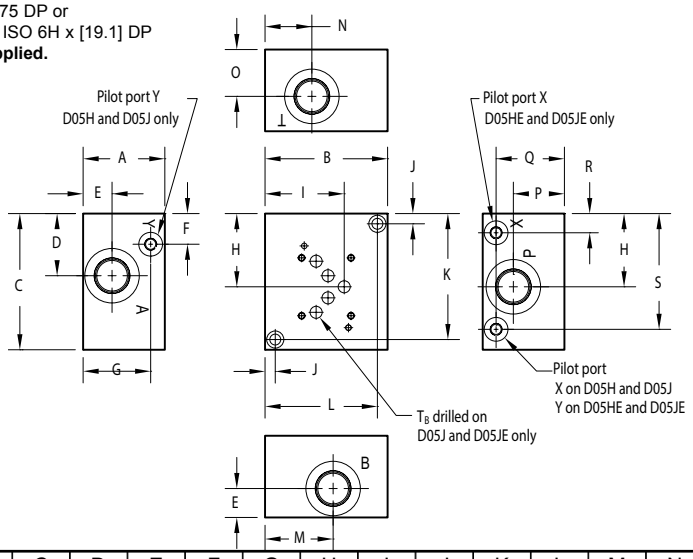

Dimension	A	B	C	D	E	F	G	H	I	J	K	L	M	N	O	P	Q	R	S
D05HSPS12	1.75 [44.5]	3.75 [95.3]	4.75 [120.7]	2.13 [54.1]	0.88 [22.4]	0.81 [20.6]	0.88 [22.4]	2.37 [60.2]	2.53 [64.3]	0.38 [9.5]	4.37 [111.0]	3.38 [85.9]	1.88 [47.8]	1.88 [47.8]	0.88 [22.4]	0.88 [22.4]	0.88 [22.4]	--	3.94 [100.1]
D05HESPS12	1.75 [44.5]	3.75 [95.3]	4.75 [120.7]	2.13 [54.1]	0.88 [22.4]	--	--	2.37 [60.2]	2.53 [64.3]	0.38 [9.5]	4.37 [111.0]	3.38 [85.9]	1.88 [47.8]	1.88 [47.8]	0.88 [22.4]	0.88 [22.4]	0.44 [11.2]	1.00 [25.4]	3.94 [100.1]
D05JSPS16	3.00 [76.2]	4.50 [114.3]	5.00 [127.0]	2.28 [57.9]	1.06 [27.0]	1.25 [31.8]	2.50 [63.5]	2.69 [68.3]	2.91 [73.8]	0.38 [9.5]	4.63 [117.5]	4.13 [104.8]	2.50 [63.5]	1.72 [43.7]	1.72 [43.7]	1.88 [47.6]	2.50 [63.5]	--	4.19 [106.4]
D05JESPS16	3.00 [76.2]	4.50 [114.3]	5.00 [127.0]	2.28 [57.9]	1.06 [27.0]	--	--	2.69 [68.3]	2.91 [73.8]	0.38 [9.5]	4.63 [117.5]	4.13 [104.8]	2.50 [63.5]	1.72 [43.7]	1.72 [43.7]	1.88 [47.6]	2.25 [57.2]	1.13 [28.6]	4.25 [108.0]

Specifications, descriptions, and dimensional data are subject to correction or change without notice or incurring obligation.
Download latest catalog page revisions at www.daman.com.

Ordering Information

Material	Valve Pattern	Product Type	Port Location	Port Threads

For **coating options** see pages 245-246.

Material

A	Aluminum - 6061-T6 3000† psi • 20.7 MPa
D	Ductile Iron - D4512 5000† psi • 34.5 MPa

† Working pressure should be considered in accordance with ISO 4413 to determine appropriate material type.

Valve Pattern
See Tech Information

D05H	(USA std.) NFPA T3.5.1-D05 Alt B High flow
D05HE	ISO 4401-05-05 NFPA T3.5.1-D05 Alt A High flow
D05J	(USA std.) NFPA T3.5.1-D05 Alt B Extra high flow
D05JE	ISO 4401-05-05 NFPA T3.5.1-D05 Alt A Extra high flow

Product Type

SP	Subplate

Port Location

S	Side ported

P, T, A, B Port Threads

D05H or D05HE only		D05J or D05JE only		X & Y port size (reference)
12P	0.75-14 NPTF ANSI B1.20.3	**16P**	1.00-11.5 NPTF ANSI B1.20.3	0.25-18 NPTF ANSI B1.20.3
12S	-12 SAE ISO 11926; SAE 1926	**16S**	-16 SAE ISO 11926; SAE 1926	-4 SAE ISO 11926; SAE 1926
12B	0.75-14 BSPP ISO 1179; BS 2779	**16B**	1.00-11 BSPP ISO 1179; BS 2779	0.25-19 BSPP ISO 1179; BS 2779
12M	M27 x 2.0 ISO 6149	**16M**	M33 x 2.0 ISO 6149	M10 x 1.0 ISO 6149
12T	0.75-14 BSPT ISO 7; BS 21	**16T**	1.00-11 BSPT ISO 7; BS 21	0.25-19 BSPT ISO 7; BS 21

Daman Products Company, Inc. • 1811 North Home Street • Mishawaka, IN 46545-7267
Tel: 800.959.7841 574.259.7841 • Fax: 800.241.7664 • Email: sales@daman.com • www.daman.com

Daman®

D05 High Flow Subplates with Pilot Ports

Back Ported Subplate

Valve mtg: UNC 0.25-20 x 0.75 DP or
Metric M6-1.0mm ISO 6H x [19.1] DP
Subplate hardware kit is supplied.
See page 134 for itemized list.

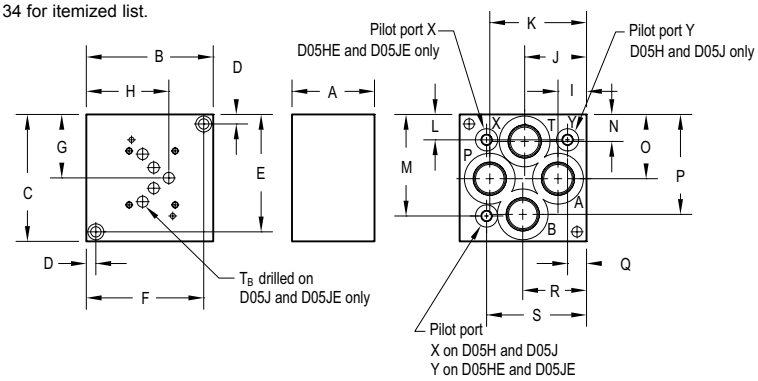

Dimension	A	B	C	D	E	F	G	H	I	J	K	L	M	N	O	P	Q	R	S
D05HSPB12	1.75 [44.5]	4.50 [114.3]	4.75 [120.7]	0.38 [9.5]	4.38 [111.3]	4.13 [104.9]	2.37 [60.2]	2.91 [73.9]	1.13 [28.6]	2.19 [55.6]	3.31 [84.1]	0.88 [22.2]	3.88 [98.4]	1.13 [28.7]	2.38 [60.5]	3.56 [90.4]	0.59 [15.1]	2.25 [57.2]	3.56 [90.5]
D05HESPB12	1.75 [44.5]	4.50 [114.3]	4.75 [120.7]	0.38 [9.5]	4.38 [111.3]	4.13 [104.9]	2.37 [60.2]	2.91 [73.9]	1.13 [28.6]	2.25 [57.2]	3.31 [84.1]	0.81 [20.6]	3.94 [100.1]	1.13 [28.7]	2.38 [60.5]	3.56 [90.4]	--	2.25 [57.2]	3.50 [88.9]
*D05JSPB16B	3.25 [82.6]	5.00 [127.0]	5.00 [127.0]	0.38 [9.5]	4.63 [117.5]	4.63 [117.5]	2.50 [63.5]	3.25 [82.6]	1.00 [25.4]	2.44 [81.9]	3.84 [97.6]	0.88 [22.2]	4.13 [104.8]	1.00 [25.4]	2.53 [64.3]	4.00 [101.6]	0.75 [19.1]	2.44 [81.9]	4.25 [108.0]
*D05JSPB16[M,P,S,T]	3.25 [82.6]	5.00 [127.0]	5.00 [127.0]	0.38 [9.5]	4.63 [117.5]	4.63 [117.5]	2.50 [63.5]	3.25 [82.6]	1.13 [28.6]	2.44 [81.9]	3.81 [96.8]	1.06 [27.0]	4.00 [101.6]	1.06 [27.0]	2.53 [64.3]	3.94 [100.1]	0.75 [19.1]	2.44 [81.9]	3.94 [100.1]
D05JESPB16	3.25 [82.6]	5.00 [127.0]	5.00 [127.0]	0.38 [9.5]	4.63 [117.5]	4.63 [117.5]	2.50 [63.5]	3.25 [82.6]	1.00 [25.4]	2.44 [81.9]	3.84 [97.6]	1.00 [25.4]	4.00 [101.6]	1.00 [25.4]	2.53 [64.3]	4.00 [101.6]	--	2.44 [81.9]	3.94 [100.1]

Specifications, descriptions, and dimensional data are subject to correction or change without notice or incurring obligation. Download latest catalog page revisions at www.daman.com.

Ordering Information

Material	Valve Pattern	Product Type	Port Location	Port Threads

For **coating options** see pages 245-246.

Material

A	Aluminum - 6061-T6 3000† psi • 20.7 MPa
D	Ductile Iron - D4512 5000† psi • 34.5 MPa

† Working pressure should be considered in accordance with ISO 4413 to determine appropriate material type.

Valve Pattern
See Tech Information

D05H	(USA std.) NFPA T3.5.1-D05 Alt B High flow
D05HE	ISO 4401-05-05 NFPA T3.5.1-D05 Alt A High flow
D05J	(USA std.) NFPA T3.5.1-D05 Alt B Extra high flow
D05JE	ISO 4401-05-05 NFPA T3.5.1-D05 Alt A Extra high flow

Product Type

SP	Subplate

Port Location

B	Back ported

P, T, A, B Port Threads

D05H or D05HE only		D05J or D05JE only		X & Y port size (reference)
12P	0.75-14 NPTF ANSI B1.20.3	**16P**	1.00-11.5 NPTF ANSI B1.20.3	0.25-18 NPTF ANSI B1.20.3
12S	-12 SAE ISO 11926; SAE 1926	**16S**	-16 SAE ISO 11926; SAE 1926	-4 SAE ISO 11926; SAE 1926
12B	0.75-14 BSPP ISO 1179; BS 2779	**16B**	1.00-11 BSPP ISO 1179; BS 2779	0.25-19 BSPP ISO 1179; BS 2779
12M	M27 x 2.0 ISO 6149	**16M**	M33 x 2.0 ISO 6149	M10 x 1.0 ISO 6149
12T	0.75-14 BSPT ISO 7; BS 21	**16T**	1.00-11 BSPT ISO 7; BS 21	0.25-19 BSPT ISO 7; BS 21

Daman Products Company, Inc. • 1811 North Home Street • Mishawaka, IN 46545-7267
Tel: 800.959.7841 574.259.7841 • Fax: 800.241.7664 • Email: sales@daman.com • www.daman.com

D05 High Flow Subplates with Pilot Ports and Relief Cavity

D05H High Flow Subplate with Main Relief Cavity

Valve mtg: UNC 0.25-20 x 0.75 DP or Metric M6-1.0mm ISO 6H x [19.1] DP
Subplate hardware kit is supplied. See page 134 for itemized list.

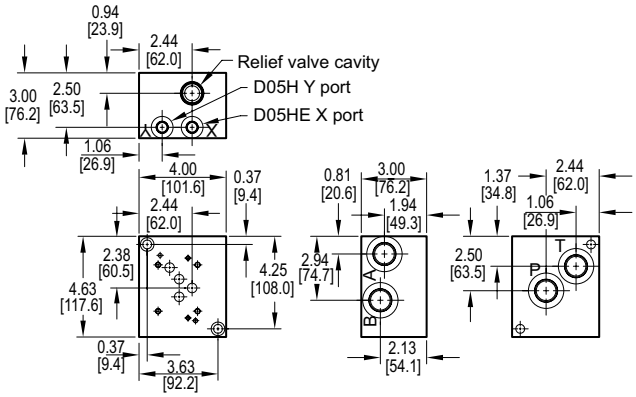

Dimension	A	B
*D05HSPRV*12B	2.81 [71.4]	1.92 [48.8]
*D05HSPRV*12[M,P,S,T]	2.75 [69.9]	2.06 [52.4]

D05J Extra High Flow Subplate with Main Relief Cavity

Valve mtg: UNC 0.25-20 x 0.75 DP or Metric M6-1.0mm ISO 6H x [19.1] DP
Subplate hardware kit is supplied. See page 135 for itemized list.

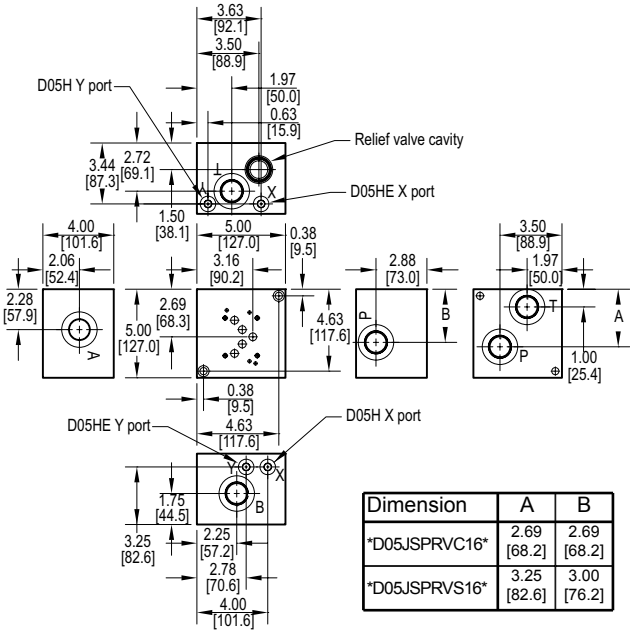

Dimension	A	B
D05JSPRVC16	2.69 [68.2]	2.69 [68.2]
D05JSPRVS16	3.25 [82.6]	3.00 [76.2]

Specifications, descriptions, and dimensional data are subject to correction or change without notice or incurring obligation. Download latest catalog page revisions at www.daman.com.

Ordering Information

Material	Valve Pattern	Product Type	Circuit	Relief Cavity	Port Threads

For **coating options** see pages 245-246.

Material

A	Aluminum - 6061-T6 3000† psi • 20.7 MPa
D	Ductile Iron - D4512 5000† psi • 34.5 MPa

† Working pressure should be considered in accordance with ISO 4413 to determine appropriate material type.

Product Type

SP	Subplate

Circuit

RV	Main Relief P to T

Valve Pattern

See Tech Information

D05H	ISO 4401-05-05 NFPA T3.5.1-D05 Alt A & B High flow
D05J	ISO 4401-05-05 NFPA T3.5.1-D05 Alt A & B Extra high flow

Relief Cavity

C	Common cavity C-10-2 on D05H (P in nose) C-10-2 for valves w/1" hex max. C-16-2 on D05J (P in nose)
S	Sun Cavity T-3A on D05H (P in nose) T-16A on D05J (P in nose) See Tech Info for valves

P, T, A,B Port Threads

D05H only		D05J only		X & Y port size (reference)
12P	0.75-14 NPTF ANSI B1.20.3	**16P**	1.00-11.5 NPTF ANSI B1.20.3	0.25-18 NPTF ANSI B1.20.3
12S	-12 SAE ISO 11926; SAE 1926	**16S**	-16 SAE ISO 11926; SAE 1926	-4 SAE ISO 11926; SAE 1926
12B	0.75-14 BSPP ISO 1179; BS 2779	**16B**	1.00-11 BSPP ISO 1179; BS 2779	0.25-19 BSPP ISO 1179; BS 2779
12M	M27 x 2.0 ISO 6149	**16M**	M33 x 2.0 ISO 6149	M10 x 1.0 ISO 6149
12T	0.75-14 BSPT ISO 7; BS 21	**16T**	1.00-11 BSPT ISO 7; BS 21	0.25-19 BSPT ISO 7; BS 21

Daman Products Company, Inc. • 1811 North Home Street • Mishawaka, IN 46545-7267
Tel: 800.959.7841 574.259.7841 • Fax: 800.241.7664 • Email: sales@daman.com • www.daman.com

D05 High Flow Subplates with Pilot Ports and Relief Cavity

Side Ported Subplate with Cylinder Port
Crossover Relief Cavities

Valve mtg: UNC 0.25-20 x 0.75 DP or
Metric M6-1.0mm ISO 6H x [19.1] DP
Subplate hardware kit is supplied.
See page 135 for itemized list.

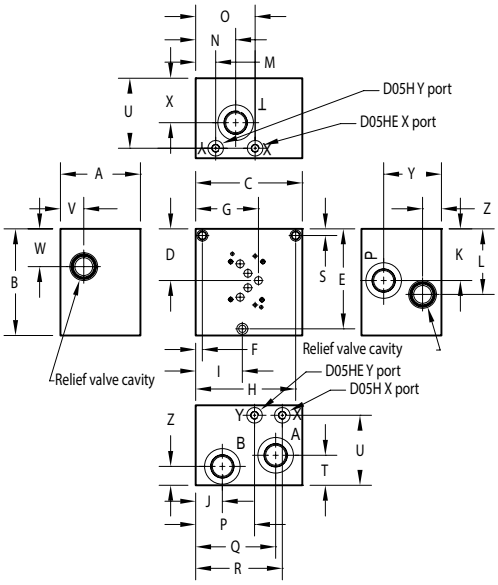

Dimension	A	B	C	D	E	F	G	H	I
*D05HSPCR*12*	4.50 [114.3]	5.00 [127.0]	5.00 [127.0]	2.41 [61.1]	4.63 [117.5]	--	3.03 [77.0]	4.63 [117.5]	2.13 [54.0]
D05JSPCRC16	4.50 [114.3]	5.00 [127.0]	5.00 [127.0]	2.41 [61.1]	4.63 [117.5]	--	3.03 [77.0]	4.63 [117.5]	2.13 [54.0]
D05JSPCRS16	4.50 [114.3]	6.00 [152.4]	6.00 [152.4]	2.91 [73.8]	5.63 [142.9]	0.38 [9.7]	3.53 [89.7]	5.63 [142.9]	2.63 [66.7]

Dimension	J	K	L	M	N	O	P	Q	R
*D05HSPCR*12*	1.00 [25.4]	2.41 [61.1]	3.00 [76.2]	0.63 [15.9]	2.00 [50.8]	2.85 [72.3]	2.81 [71.4]	4.00 [101.6]	4.38 [111.1]
D05JSPCRC16	1.00 [25.4]	2.41 [61.1]	3.00 [76.2]	0.63 [15.9]	1.75 [44.5]	2.85 [72.3]	2.81 [71.4]	4.00 [101.6]	4.38 [111.1]
D05JSPCRS16	1.50 [38.1]	2.91 [73.8]	3.69 [93.7]	1.13 [28.6]	2.25 [57.2]	3.35 [85.0]	3.31 [84.1]	4.50 [114.3]	4.88 [124.0]

Dimension	S	T	U	V	W	X	Y	Z
D05HSPCRC12	0.38 [9.5]	1.69 [42.9]	3.94 [100.0]	1.47 [37.3]	1.75 [44.5]	2.50 [63.5]	3.25 [82.6]	1.28 [32.5]
D05HSPCRS12	0.38 [9.5]	1.69 [42.9]	3.94 [100.0]	1.31 [33.3]	1.75 [44.5]	2.50 [63.5]	3.25 [82.6]	1.06 [27.0]
D05JSPCRC16	0.38 [9.5]	1.69 [42.9]	3.94 [100.0]	1.31 [33.3]	1.75 [44.5]	2.50 [63.5]	3.25 [82.6]	1.06 [27.0]
D05JSPCRS16	0.38 [9.5]	1.69 [42.9]	3.94 [100.0]	1.31 [33.3]	2.13 [54.0]	2.50 [63.5]	3.25 [82.6]	1.06 [27.0]

Specifications, descriptions, and dimensional data are subject to correction or change without notice or incurring obligation. Download latest catalog page revisions at www.daman.com.

Ordering Information

Material	Valve Pattern	Product Type	Circuit	Relief Cavity	Port Threads

For **coating options** see pages 245-246.

Material

A	Aluminum - 6061-T6 3000† psi • 20.7 MPa
D	Ductile Iron - D4512 5000† psi • 34.5 MPa

† Working pressure should be considered in accordance with ISO 4413 to determine appropriate material type.

Product Type

SP	Subplate

Circuit

CR	Crossover Reliefs A to B and B to A

Valve Pattern
See Tech Information

D05H	ISO 4401-05-05 NFPA T3.5.1-D05 Alt A & B High flow
D05J	ISO 4401-05-05 NFPA T3.5.1-D05 Alt A & B Extra high flow

Relief Cavity

C	Common cavity C-10-2 on D05H (P in nose) C-10-2 for valves w/1" hex max. C-16-2 on D05J (P in nose)
S	Sun Cavity T-3A on D05H (P in nose) T-16A on D05J (P in nose) See Tech Info for valves

P, T, A, B Port Threads

D05H only		D05J only		X & Y port size (reference)
12P	0.75-14 NPTF ANSI B1.20.3	**16P**	1.00-11.5 NPTF ANSI B1.20.3	0.25-18 NPTF ANSI B1.20.3
12S	-12 SAE ISO 11926; SAE 1926	**16S**	-16 SAE ISO 11926; SAE 1926	-4 SAE ISO 11926; SAE 1926
12B	0.75-14 BSPP ISO 1179; BS 2779	**16B**	1.00-11 BSPP ISO 1179; BS 2779	0.25-19 BSPP ISO 1179; BS 2779
12M	M27 x 2.0 ISO 6149	**16M**	M33 x 2.0 ISO 6149	M10 x 1.0 ISO 6149
12T	0.75-14 BSPT ISO 7; BS 21	**16T**	1.00-11 BSPT ISO 7; BS 21	0.25-19 BSPT ISO 7; BS 21

Daman Products Company, Inc. • 1811 North Home Street • Mishawaka, IN 46545-7267
Tel: 800.959.7841 574.259.7841 • Fax: 800.241.7664 • Email: sales@daman.com • www.daman.com

D07 Subplates

Side Ported Subplate

Valve mtg: UNC 0.25-20 x 0.75 DP and UNC 0.38-16 x 1.00 DP or
Metric M6-1.0mm ISO 6H x [19.1] DP and M10-1.5mm ISO 6H x [25.4] DP
Subplate hardware kit is supplied.
See page 135 for itemized list.

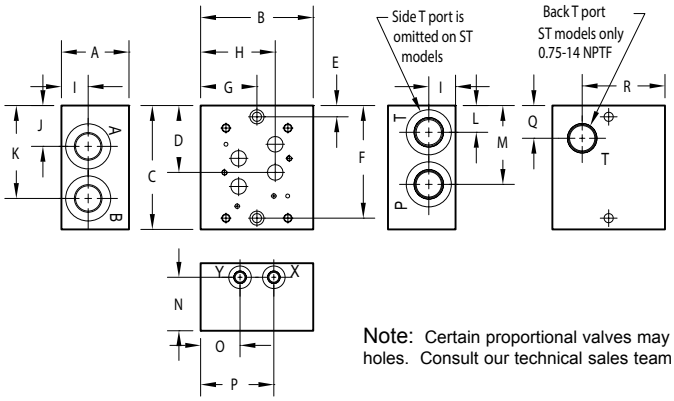

Back Ported Subplate

Valve mtg: UNC 0.25-20 x 0.75 DP and UNC 0.38-16 x 1.00 DP or
Metric M6-1.0mm ISO 6H x [19.1] DP and M10-1.5mm ISO 6H x [25.4] DP
Subplate hardware kit is supplied.
See page 135 for itemized list.

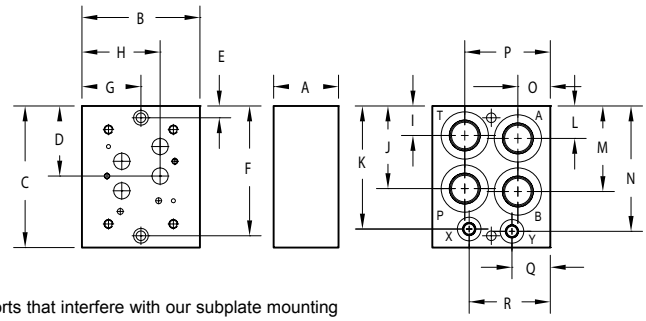

Note: Certain proportional valves may have ports that interfere with our subplate mounting holes. Consult our technical sales team for information or custom subplate pricing.

Dimension	A	B	C	D	E	F	G	H	I	J	K	L	M	N	O	P	Q	R
D07SPSO12	1.75 [44.5]	3.75 [95.3]	4.75 [120.7]	2.34 [59.4]	0.38 [9.5]	4.38 [111.3]	1.88 [47.8]	2.69 [68.3]	0.81 [20.6]	1.50 [38.1]	3.13 [79.5]	1.19 [30.2]	2.78 [70.6]	1.25 [31.8]	1.12 [28.4]	2.62 [66.5]	--	--
D07SPST12	1.75 [44.5]	3.75 [95.3]	4.75 [120.7]	2.34 [59.4]	0.38 [9.5]	4.38 [111.3]	1.88 [47.8]	2.69 [68.3]	0.81 [20.6]	1.50 [38.1]	3.13 [79.5]	--	2.78 [70.6]	1.25 [31.8]	1.12 [28.4]	2.62 [66.5]	1.09 [27.7]	2.69 [68.3]
D07SPSO16	3.00 [76.2]	5.00 [127.0]	5.50 [139.7]	2.97 [75.4]	0.50 [12.7]	5.00 [127.0]	2.50 [63.5]	3.31 [84.2]	1.16 [29.5]	1.81 [46.0]	4.13 [104.8]	1.19 [30.2]	3.50 [88.9]	2.38 [60.3]	1.75 [44.5]	3.25 [82.6]	--	--
*D07SPB12B	1.50 [38.1]	4.00 [101.6]	4.75 [120.7]	2.34 [59.4]	0.38 [9.5]	4.37 [111.0]	2.00 [50.8]	2.81 [71.4]	1.09 [27.7]	2.75 [69.9]	4.00 [101.6]	1.19 [30.2]	2.81 [71.4]	4.09 [103.9]	1.13 [28.7]	2.94 [74.7]	1.13 [28.7]	2.94 [74.7]
*D07SPB12[M,P,S,T]	1.50 [38.1]	4.00 [101.6]	4.75 [120.7]	2.34 [59.4]	0.38 [9.5]	4.37 [111.0]	2.00 [50.8]	2.81 [71.4]	1.09 [27.7]	2.81 [71.4]	4.00 [101.6]	1.25 [31.8]	2.91 [73.9]	4.09 [103.9]	1.13 [28.7]	2.94 [74.7]	1.13 [28.7]	2.94 [74.7]
D07SPB16	2.75 [69.9]	5.00 [101.6]	6.00 [152.4]	2.97 [75.4]	0.50 [12.7]	5.50 [139.7]	2.50 [63.5]	3.31 [84.2]	1.25 [31.8]	3.50 [88.9]	5.31 [134.9]	1.38 [34.9]	3.63 [92.1]	5.31 [134.9]	1.38 [34.9]	3.63 [92.1]	1.63 [41.3]	3.44 [87.3]

Specifications, descriptions, and dimensional data are subject to correction or change without notice or incurring obligation. Download latest catalog page revisions at www.daman.com.

Ordering Information

Material	Valve Pattern	Product Type	Port Location	Port Threads

For **coating options** see pages 245-246.

Material

A	Aluminum - 6061-T6 3000† psi • 20.7 MPa
D	Ductile Iron - D4512 5000† psi • 34.5 MPa

† Working pressure should be considered in accordance with ISO 4413 to determine appropriate material type.

Valve Pattern

D07	ISO 4401-07-06 NFPA T3.5.1-D07 See Tech Information

Product Type

SP	Subplate

Port Location

SO	Side ported
ST	Side P,A,B ports Back T port. Available on 12P and 12S only
B	Back ported

P, T, A, B Port Threads*

				X & Y port size (reference)
12P	0.75-14 NPTF ANSI B1.20.3	**16P**	1.00-11.5 NPTF ANSI B1.20.3	0.25-18 NPTF ANSI B1.20.3
12S	-12 SAE ISO 11926; SAE 1926	**16S**	-16 SAE ISO 11926; SAE 1926	-6 SAE ISO 11926; SAE 1926
12B	0.75-14 BSPP ISO 1179; BS 2779	**16B**	1.00-11 BSPP ISO 1179; BS 2779	0.25-19 BSPP ISO 1179; BS 2779
12M	M27 x 2.0 ISO 6149	**16M**	M33 x 2.0 ISO 6149	M14 x 1.5 ISO 6149
12T	0.75-14 BSPT ISO 7; BS 21	**16T**	1.00-11 BSPT ISO 7; BS 21	0.25-19 BSPT ISO 7; BS 21

* T port is always 0.75-14 NPTF on ST models.

Daman Products Company, Inc. • 1811 North Home Street • Mishawaka, IN 46545-7267
Tel: 800.959.7841 574.259.7841 • Fax: 800.241.7664 • Email: sales@daman.com • www.daman.com

Daman®

D07 Subplates with Relief Cavity

Dual Ported Subplate with Main Relief Cavity

Valve mtg: UNC 0.25-20 x 0.50 DP and UNC 0.38-16 x 0.75 DP or
Metric M6-1.0mm ISO 6H x [12.7] DP and M10-1.5mm ISO 6H x [19.1] DP
Subplate hardware kit is supplied.
See page 135 for itemized list.

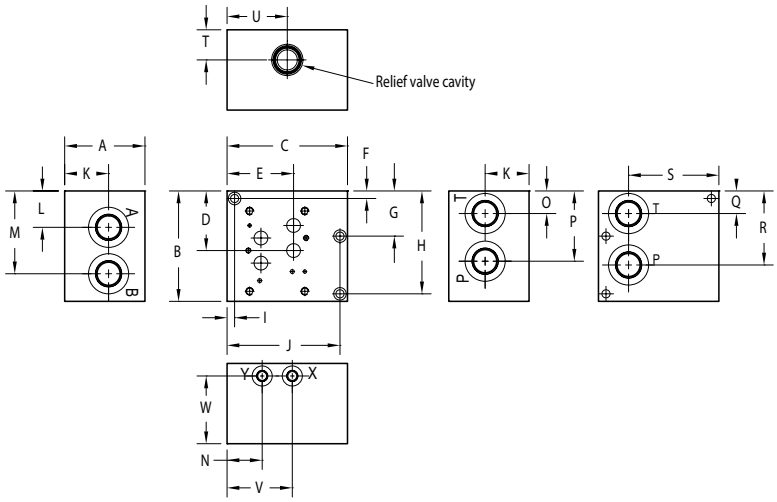

Dimension	A	B	C	D	E	F	G	H
D07SPRVC12	2.75 [69.9]	4.75 [120.7]	4.00 [101.6]	2.34 [59.4]	2.81 [71.4]	0.38 [9.5]	--	4.37 [111.0]
D07SPRVS12	2.50 [63.5]	4.75 [120.7]	4.00 [101.6]	2.34 [59.4]	2.81 [71.4]	0.38 [9.5]	--	4.37 [111.0]
D07SPRVC16	4.00 [101.6]	5.50 [139.7]	6.00 [152.4]	2.97 [75.4]	3.31 [84.2]	0.38 [9.5]	2.25 [57.2]	5.13 [130.2]
D07SPRVS16	4.00 [101.6]	5.50 [139.7]	6.00 [152.4]	2.97 [75.4]	3.31 [84.2]	0.38 [9.5]	2.25 [57.2]	5.13 [130.2]

Dimension	I	J	K	L	M	N	O	P
D07SPRVC12	1.38 [35.1]	2.00 [50.8]	1.50 [38.1]	1.50 [38.1]	3.12 [79.2]	1.19 [30.2]	1.19 [30.2]	2.78 [70.6]
D07SPRVS12	1.38 [35.1]	2.00 [50.8]	1.25 [31.8]	1.50 [38.1]	3.12 [79.2]	1.19 [30.2]	1.19 [30.2]	2.78 [70.6]
D07SPRVC16	0.38 [9.5]	5.63 [142.9]	2.19 [55.6]	1.81 [46.0]	4.13 [104.8]	1.75 [44.5]	1.00 [25.4]	3.50 [88.9]
D07SPRVS16	0.38 [9.5]	5.63 [142.9]	2.19 [55.6]	1.81 [46.0]	4.13 [104.8]	1.75 [44.5]	1.13 [28.6]	3.50 [88.9]

Dimension	Q	R	S	T	U	V	W
D07SPRVC12	1.13 [28.6]	2.75 [69.9]	2.81 [71.4]	1.75 [44.5]	2.22 [56.4]	2.81 [71.4]	2.25 [57.2]
D07SPRVS12	1.13 [28.6]	2.75 [69.9]	2.81 [71.4]	1.25 [31.8]	2.31 [58.7]	2.81 [71.4]	2.00 [50.8]
D07SPRVC16	1.13 [28.6]	3.69 [93.7]	4.50 [114.3]	1.50 [38.1]	3.00 [76.2]	3.25 [82.6]	3.38 [85.7]
D07SPRVS16	1.13 [28.6]	3.69 [93.7]	4.50 [114.3]	1.50 [38.1]	3.00 [76.2]	3.25 [82.6]	3.38 [85.7]

Specifications, descriptions, and dimensional data are subject to correction or change without notice or incurring obligation.
Download latest catalog page revisions at www.daman.com.

Ordering Information

Material	Valve Pattern	Product Type	Circuit	Relief Cavity	Port Threads

For **coating options** see pages 245-246.

Material

A	Aluminum - 6061-T6 3000† psi • 20.7 MPa
D	Ductile Iron - D4512 5000† psi • 34.5 MPa

† Working pressure should be considered in accordance with ISO 4413 to determine appropriate material type.

Product Type

SP	Subplate

Circuit

RV	Main Relief P to T

Valve Pattern

D07	ISO 4401-07-06 NFPA T3.5.1-D07 See Tech Information

Relief Cavity

C	Common cavity C-10-2 w/ 12* ports (P in nose) C-10-2 for valves w/1" hex max. C-16-2 w/ 16* ports (P in nose)
S	Sun Cavity T-3A w/ 12* ports (P in nose) T-16A w/ 16* ports (P in nose) See Tech Info for valves

P, T, A, B Port Threads

				X & Y port size (reference)
12P	0.75-14 NPTF ANSI B1.20.3	**16P**	1.00-11.5 NPTF ANSI B1.20.3	0.25-18 NPTF ANSI B1.20.3
12S	-12 SAE ISO 11926; SAE 1926	**16S**	-16 SAE ISO 11926; SAE 1926	-6 SAE ISO 11926; SAE 1926
12B	0.75-14 BSPP ISO 1179; BS 2779	**16B**	1.00-11 BSPP ISO 1179; BS 2779	0.25-19 BSPP ISO 1179; BS 2779
12M	M27 x 2.0 ISO 6149	**16M**	M33 x 2.0 ISO 6149	M14 x 1.5 ISO 6149
12T	0.75-14 BSPT ISO 7; BS 21	**16T**	1.00-11 BSPT ISO 7; BS 21	0.25-19 BSPT ISO 7; BS 21

Daman Products Company, Inc. • 1811 North Home Street • Mishawaka, IN 46545-7267
Tel: 800.959.7841 574.259.7841 • Fax: 800.241.7664 • Email: sales@daman.com • www.daman.com

D08 Subplates

Side Ported Subplate

Valve mtg: UNC 0.50-13 x 1.19 DP or
Metric M12-1.75mm ISO 6H x [30.2] DP
Subplate hardware kit is supplied.
See page 135 for itemized list.

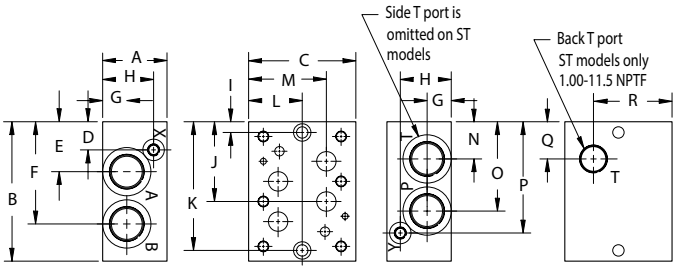

Back Ported Subplate

Valve mtg: UNC 0.50-13 x 1.19 DP or
Metric M12-1.75mm ISO 6H x [30.2] DP
Subplate hardware kit is supplied.
See page 135 for itemized list.

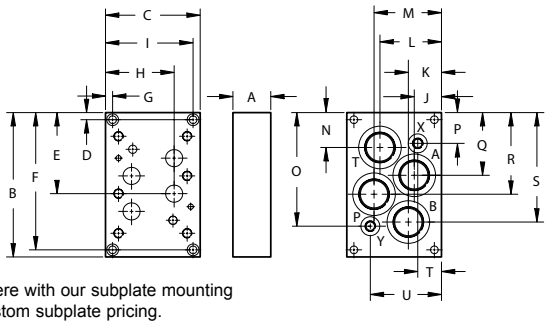

Note: Certain proportional valves may have ports that interfere with our subplate mounting holes. Consult our technical sales team for information or custom subplate pricing.

Dimension	A	B	C	D	E	F	G	H	I	J	K	L	M	N	O	P	Q	R	S	T	U
*D08SPSO12P, *D08SPSO16*	2.00 [50.8]	6.13 [155.7]	4.50 [114.3]	1.19 [30.2]	2.53 [64.3]	4.53 [115.1]	1.00 [25.4]	1.00 [25.4]	0.50 [12.7]	3.53 [89.7]	5.62 [142.7]	2.25 [57.2]	3.38 [85.9]	1.56 [39.7]	3.59 [91.2]	4.94 [125.5]	--	--	--	--	--
*D08SPST12P, *D08SPST16*	2.00 [50.8]	6.13 [155.7]	4.50 [114.3]	1.19 [30.2]	2.53 [64.3]	4.53 [115.1]	1.00 [25.4]	1.00 [25.4]	0.50 [12.7]	3.53 [89.7]	5.62 [142.7]	2.25 [57.2]	3.38 [85.9]	--	3.59 [91.2]	4.94 [125.5]	1.66 [42.1]	3.38 [85.9]	--	--	--
D08SPSO20	3.00 [76.2]	6.50 [165.1]	5.00 [127.0]	1.31 [33.3]	2.33 [59.2]	4.77 [121.2]	1.13 [28.6]	2.38 [60.3]	0.50 [12.7]	3.72 [94.5]	6.00 [152.4]	2.50 [63.5]	3.63 [92.2]	1.73 [43.9]	4.17 [105.9]	5.19 [131.8]	--	--	--	--	--
*D08SPSO20M	4.00 [101.6]	6.50 [165.1]	5.00 [127.0]	1.38 [34.9]	2.33 [59.2]	4.77 [121.2]	1.63 [41.3]	3.13 [79.4]	0.50 [12.7]	3.72 [94.5]	6.00 [152.4]	2.50 [63.5]	3.63 [92.2]	1.73 [43.9]	4.17 [105.9]	5.13 [130.2]	--	--	--	--	--
*D08SPB16B	1.50 [38.1]	6.13 [155.7]	4.63 [117.6]	0.50 [12.7]	3.53 [89.7]	5.62 [142.7]	2.31 [58.7]	3.44 [87.4]	--	1.19 [30.2]	1.19 [30.2]	3.44 [87.4]	3.44 [87.4]	1.53 [38.9]	5.16 [131.0]	0.97 [24.6]	2.47 [62.7]	3.66 [92.9]	4.59 [116.7]	1.25 [31.8]	3.38 [85.9]
*D08SPB12P, *D08SPB16[M,P,S,T]	1.50 [38.1]	6.13 [155.7]	4.63 [117.6]	0.50 [12.7]	3.53 [89.7]	5.62 [142.7]	2.31 [58.7]	3.44 [87.4]	--	1.19 [30.2]	1.19 [30.2]	3.44 [87.4]	3.44 [87.4]	1.66 [42.2]	4.94 [125.5]	1.19 [30.2]	2.59 [65.8]	3.53 [89.7]	4.47 [113.5]	1.25 [31.8]	3.38 [85.9]
D08SPB20	2.00 [50.8]	7.63 [193.8]	5.00 [127.0]	0.38 [9.7]	4.28 [108.7]	7.25 [184.2]	0.38 [9.7]	3.63 [92.2]	4.63 [117.6]	1.44 [36.6]	1.75 [44.5]	3.25 [82.6]	3.56 [90.4]	1.84 [46.7]	6.00 [152.4]	1.63 [41.3]	3.31 [84.1]	4.31 [109.5]	5.78 [146.8]	1.44 [36.6]	3.56 [90.4]

Specifications, descriptions, and dimensional data are subject to correction or change without notice or incurring obligation.
Download latest catalog page revisions at www.daman.com.

Ordering Information

Material	Valve Pattern	Product Type	Port Location	Port Threads

For **coating options** see pages 245-246.

Material

A	Aluminum - 6061-T6 3000† psi • 20.7 MPa
D	Ductile Iron - D4512 5000† psi • 34.5 MPa

† Working pressure should be considered in accordance with ISO 4413 to determine appropriate material type.

Valve Pattern

D08	ISO 4401-08-07 NFPA T3.5.1-D08 See Tech Information

Product Type

SP	Subplate

Port Location

SO	Side ported
ST	Side P,A,B ports; back T port. Available on 12P, 16P and 16S only
B	Back ported

P, T, A, B Port Threads*

				X & Y port size (reference)
12P	0.75-14 NPTF ANSI B1.20.3			0.25-18 NPTF ANSI B1.20.3
16P	1.00-11.5 NPTF ANSI B1.20.3	**20P**	1.25-11.5 NPTF ANSI B1.20.3	0.25-18 NPTF ANSI B1.20.3
16S	-16 SAE ISO 11926; SAE 1926	**20S**	-20 SAE ISO 11926; SAE 1926	-6 SAE ISO 11926; SAE 1926
16B	1.00-11 BSPP ISO 1179; BS 2779	**20B**	1.25-11 BSPP ISO 1179; BS 2779	0.25-19 BSPP ISO 1179; BS 2779
16M	M33 x 2.0 ISO 6149	**20M**	M42 x 2.0 ISO 6149	M14 x 1.5 ISO 6149
16T	1.00-11 BSPT ISO 7; BS 21	**20T**	1.25-11 BSPT ISO 7; BS 21	0.25-19 BSPT ISO 7; BS 21

* T port is always 1.00-11.5 NPTF on ST models.

Daman Products Company, Inc. • 1811 North Home Street • Mishawaka, IN 46545-7267
Tel: 800.959.7841 574.259.7841 • Fax: 800.241.7664 • Email: sales@daman.com • www.daman.com

Daman®

D08 Subplates with Relief Valve

Dual Ported Subplate with Main Relief Cavity

Valve mtg: UNC 0.50-13 x 1.19 DP or
Metric M12-1.75mm ISO 6H x [30.2] DP
Subplate hardware kit is supplied.
See page 135 for itemized list.

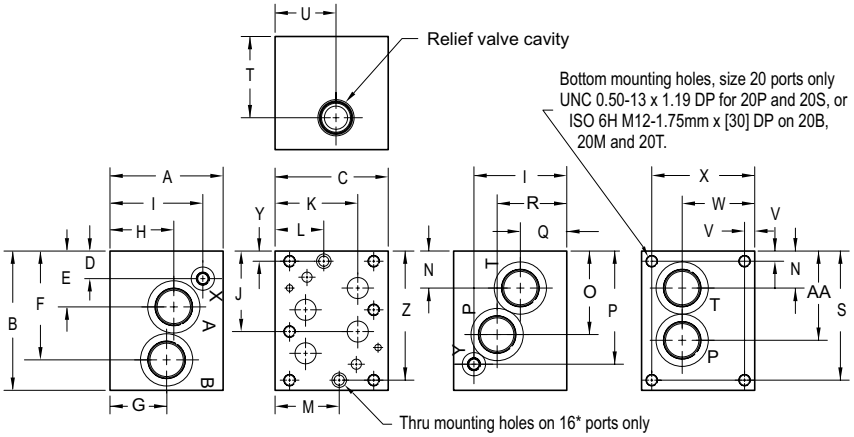

Note: Certain proportional valves may have ports that interfere with our subplate mounting holes. Consult our technical sales team for information or custom subplate pricing.

Dimension	A	B	C	D	E	F	G
D08SPRVC16	3.00 [76.2]	6.00 [152.4]	4.50 [114.3]	0.91 [23.1]	2.41 [61.2]	4.53 [115.1]	1.87 [47.5]
D08SPRVS16	3.00 [76.2]	6.00 [152.4]	4.50 [114.3]	0.91 [23.1]	2.41 [61.2]	4.53 [115.1]	1.87 [47.5]
*D08SPRV*20*	4.88 [124.0]	6.00 [152.4]	4.88 [124.0]	1.19 [30.2]	2.41 [61.2]	4.69 [119.1]	2.75 [69.9]
*D08SPRV*20M	4.88 [124.0]	6.00 [152.4]	4.88 [124.0]	1.19 [30.2]	2.41 [61.2]	4.69 [119.1]	2.00 [50.8]

Dimension	H	I	J	K	L	M	N
D08SPRVC16	1.87 [47.5]	1.25 [31.8]	3.47 [88.1]	3.38 [85.9]	1.68 [42.7]	2.56 [65.0]	1.47 [37.3]
D08SPRVS16	1.87 [47.5]	1.25 [31.8]	3.47 [88.1]	3.38 [85.9]	1.68 [42.7]	2.56 [65.0]	1.47 [37.3]
*D08SPRV*20*	2.75 [69.9]	4.00 [101.6]	3.47 [88.1]	3.56 [90.4]	--	--	1.59 [40.4]
*D08SPRV*20M	2.75 [69.9]	4.00 [101.6]	3.47 [88.1]	3.56 [90.4]	--	--	1.59 [40.4]

Dimension	O	P	Q	R	S	T	U
D08SPRVC16	3.59 [91.2]	5.09 [129.3]	1.87 [47.5]	1.87 [47.5]	--	1.25 [31.8]	2.47 [62.7]
D08SPRVS16	3.59 [91.2]	5.09 [129.3]	1.87 [47.5]	1.87 [47.5]	--	1.87 [47.5]	2.81 [71.4]
*D08SPRV*20*	3.60 [91.4]	4.88 [124.0]	2.00 [50.8]	3.00 [76.2]	5.56 [141.2]	3.50 [88.9]	2.63 [66.7]
*D08SPRV*20M	4.00 [101.6]	4.88 [124.0]	2.00 [50.8]	2.38 [60.3]	5.56 [141.2]	3.50 [88.9]	2.63 [66.7]

Dimension	V	W	X	Y	Z	AA
D08SPRVC16	--	3.50 [88.9]	--	0.44 [11.2]	5.56 [141.2]	3.59 [91.2]
D08SPRVS16	--	3.50 [88.9]	--	0.44 [11.2]	5.56 [141.2]	3.59 [91.2]
*D08SPRV*20*	0.44 [11.2]	3.13 [79.5]	4.44 [112.8]	--	--	3.84 [97.6]
*D08SPRV*20M	0.44 [11.2]	3.13 [79.5]	4.44 [112.8]	--	--	4.00 [101.6]

Specifications, descriptions, and dimensional data are subject to correction or change without notice or incurring obligation.
Download latest catalog page revisions at www.daman.com.

Ordering Information

Material	Valve Pattern	Product Type	Circuit	Relief Cavity	Port Threads

For **coating options** see pages 245-246.

Material

A	Aluminum - 6061-T6 3000† psi • 20.7 MPa
D	Ductile Iron - D4512 5000† psi • 34.5 MPa

† Working pressure should be considered in accordance with ISO 4413 to determine appropriate material type.

Product Type

SP	Subplate

Circuit

RV	Main Relief P to T

Valve Pattern

D08	ISO 4401-08-07 NFPA T3.5.1-D08 See Technical Info

Relief Cavity

C	Common cavity C-10-2 w/ 16* ports (P in nose) C-10-2 for valves w/1" hex max. C-16-2 w/ 20* ports (P in nose)
S	Sun Cavity T-3A w/ 16* ports (P in nose) T-16A w/ 20* ports (P in nose) See Tech Info for valves

P, T, A, B Port Threads

				X & Y port size (reference)
16P	1.00-11.5 NPTF ANSI B1.20.3	20P	1.25-11.5 NPTF ANSI B1.20.3	0.25-18 NPTF ANSI B1.20.3
16S	-16 SAE ISO 11926; SAE 1926	20S	-20 SAE ISO 11926; SAE 1926	-6 SAE ISO 11926; SAE 1926
16B	1.00-11 BSPP ISO 1179; BS 2779	20B	1.25-11 BSPP ISO 1179; BS 2779	0.25-19 BSPP ISO 1179; BS 2779
16M	M33 x 2.0 ISO 6149	20M	M42 x 2.0 ISO 6149	M14 x 1.5 ISO 6149
16T	1.00-11 BSPT ISO 7; BS 21	20T	1.25-11 BSPT ISO 7; BS 21	0.25-19 BSPT ISO 7; BS 21

Daman Products Company, Inc. • 1811 North Home Street • Mishawaka, IN 46545-7267
Tel: 800.959.7841 574.259.7841 • Fax: 800.241.7664 • Email: sales@daman.com • www.daman.com

D10 Subplates

Side Ported Subplate

Valve mtg: UNC 0.75-10 x 1.63 [41.3] DP
Subplate hardware kit is supplied.
See page 136 for itemized list.

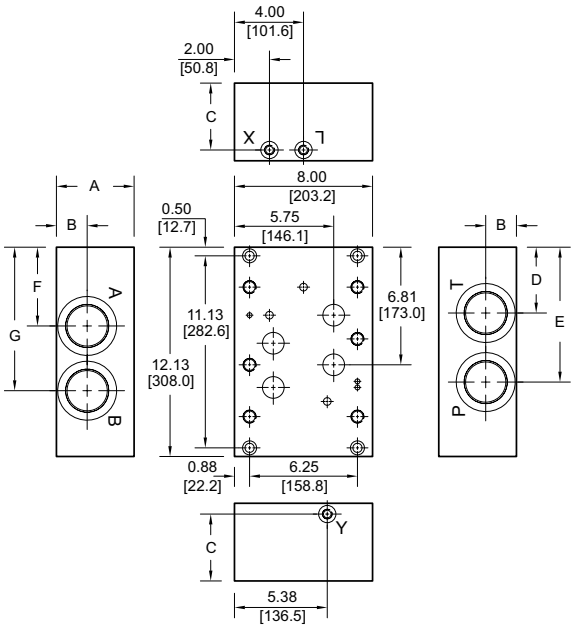

Back Ported Subplate

Valve mtg: UNC 0.75-10 x 1.63 [41.3] DP
Subplate hardware kit is supplied.
See page 136 for itemized list.

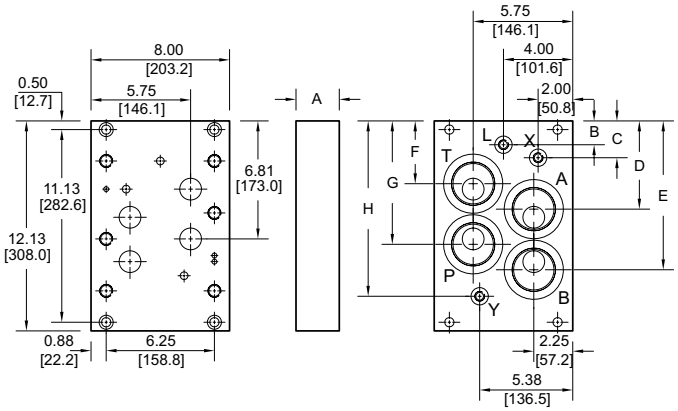

Dimension	A	B	C	D	E	F	G	H
*D10SPSO20P	3.50 [88.9]	1.75 [44.5]	2.88 [73.0]	3.81 [96.8]	7.13 [181.0]	5.22 [132.6]	8.31 [211.2]	--
D10SPSO24	4.00 [101.6]	1.75 [44.5]	3.38 [85.7]	3.81 [96.8]	7.13 [181.0]	5.22 [132.6]	8.31 [211.2]	--
D10SPSO32	4.50 [114.3]	1.78 [45.2]	3.88 [98.4]	3.81 [96.8]	7.81 [198.4]	4.56 [115.9]	8.31 [211.2]	--
*D10SPB20P *D10SPB24*	2.00 [50.8]	2.31 [58.7]	3.94 [100.0]	5.81 [147.6]	8.61 [218.7]	3.94 [100.0]	6.81 [173.0]	8.94 [227.0]
D10SPB32	2.50 [63.5]	1.38 [34.9]	2.13 [54.0]	5.09 [129.4]	8.59 [218.3]	3.63 [92.1]	7.13 [181.0]	10.13 [257.2]

Specifications, descriptions, and dimensional data are subject to correction or change without notice or incurring obligation. Download latest catalog page revisions at www.daman.com.

Ordering Information

Material	Valve Pattern	Product Type	Port Location	Port Threads

For **coating options** see pages 245-246.

Material

A	Aluminum - 6061-T6 3000† psi • 20.7 MPa
D	Ductile Iron - D4512 5000† psi • 34.5 MPa

† Working pressure should be considered in accordance with ISO 4413 to determine appropriate material type.

Product Type

SP	Subplate

P, T, A, B Port Threads

				X, Y, & L port size (reference)
20P	1.25-11.5 NPTF ANSI B1.20.3			0.38-18 NPTF ANSI B1.20.3
24P	1.50-11.5 NPTF ANSI B1.20.3	**32P**	2.00-11.5 NPTF ANSI B1.20.3	0.38-18 NPTF ANSI B1.20.3
24S	-24 SAE ISO 11926; SAE 1926	**32S**	-32 SAE ISO 11926; SAE 1926	-6 SAE ISO 11926; SAE 1926

Valve Pattern

D10	ISO 4401-10-08 NFPA T3.5.1-D10 See Tech Information

Port Location

SO	Side ported
B	Back ported

Daman Products Company, Inc. • 1811 North Home Street • Mishawaka, IN 46545-7267
Tel: 800.959.7841 574.259.7841 • Fax: 800.241.7664 • Email: sales@daman.com • www.daman.com

2F06, 2F07 Flow Control Subplates

2F06 Side Ported Subplate

Valve mtg: UNC 0.31-18 x 0.88 DP
Subplate hardware kit is supplied.
See page 136 for itemized list.

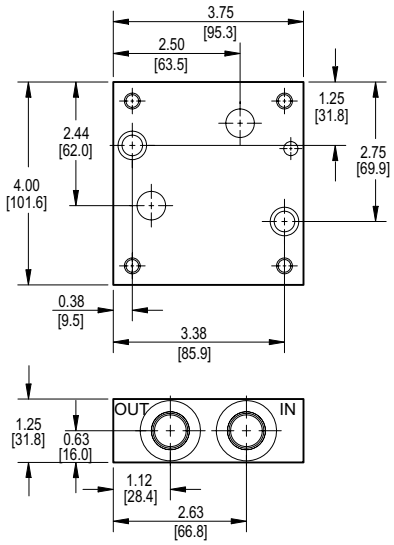

2F07 Side Ported Subplate

Valve mtg: UNC 0.38-16 x 1.00 DP
Subplate hardware kit is supplied.
See page 136 for itemized list.

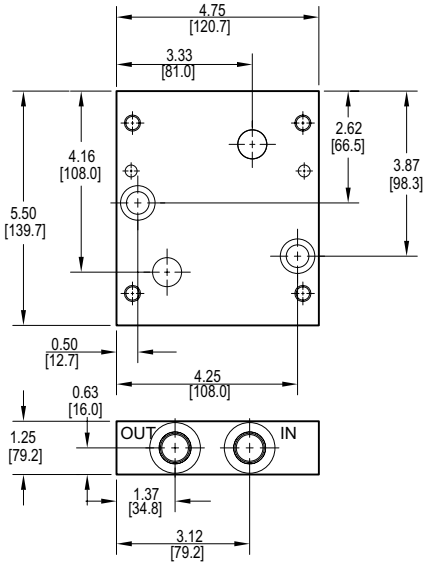

Specifications, descriptions, and dimensional data are subject to correction or change without notice or incurring obligation. Download latest catalog page revisions at www.daman.com.

Ordering Information

Material	Valve Pattern	Product Type	Port Location	Port Threads

For **coating options** see pages 245-246.

Material

A	Aluminum - 6061-T6 3000† psi • 20.7 MPa
D	Ductile Iron - D4512 5000† psi • 34.5 MPa

† Working pressure should be considered in accordance with ISO 4413 to determine appropriate material type.

Valve Pattern

2F06	ISO 6263-06-05 NFPA T3.5.1-2F06 See Tech Information
2F07	ISO 6263-07-09 NFPA T3.5.1-2F07 See Tech Information

Product Type

SP	Subplate

Port Location

S	Side ported

Port Threads

2F06 only	
6P	0.38-18 NPTF ANSI B1.20.3
2F06 or 2F07	
8P	0.50-14 NPTF ANSI B1.20.3
8S	-8 SAE ISO 11926; SAE 1926

Daman Products Company, Inc. • 1811 North Home Street • Mishawaka, IN 46545-7267
Tel: 800.959.7841 574.259.7841 • Fax: 800.241.7664 • Email: sales@daman.com • www.daman.com

P06, P08, P10 Pressure Control Subplates

P06 Side Ported Subplate

Valve mtg: UNC 0.38-16 x 1.00 [25] DP
X & Y Ports: 0.38-18 NPTF or -6 SAE.
Subplate hardware kit is supplied.
See page 136 for itemized list.

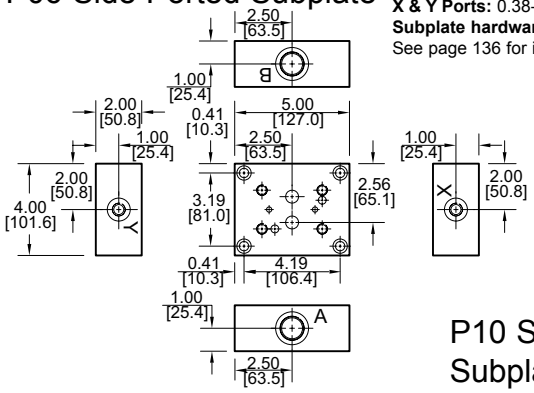

P08 Side Ported Subplate

Valve mtg: UNC 0.38-16 x 1.00 [25] DP
X & Y Ports: 0.38-18 NPTF or -6 SAE.
Subplate hardware kit is supplied.
See page 136 for itemized list.

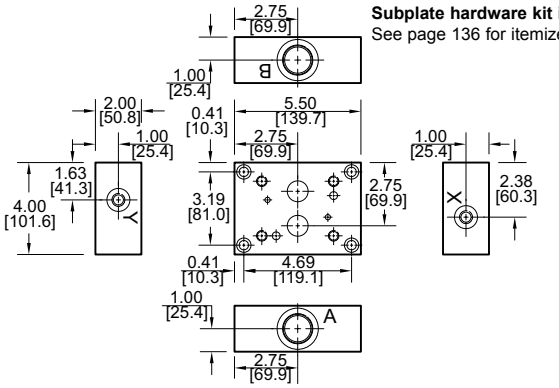

P10 Side Ported Subplate

Valve mtg: UNC 0.38-16 x 1.00 [25] DP
X & Y Ports: 0.38-18 NPTF or -6 SAE.
Subplate hardware kit is supplied.
See page 136 for itemized list.

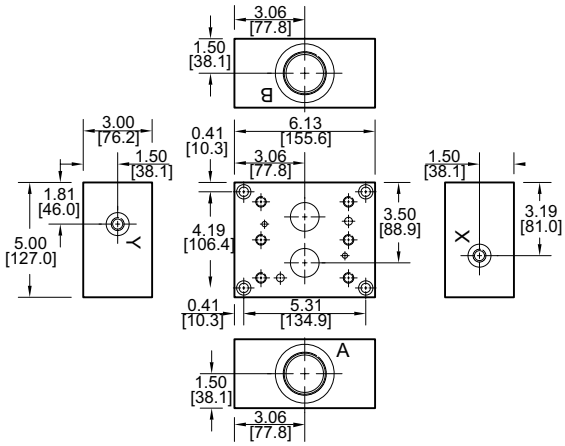

Specifications, descriptions, and dimensional data are subject to correction or change without notice or incurring obligation. Download latest catalog page revisions at www.daman.com.

Ordering Information

Material	Valve Pattern	Product Type	Port Location	Port Threads

For **coating options** see pages 245-246.

Material

A	Aluminum - 6061-T6 3000† psi • 20.7 MPa
D	Ductile Iron - D4512 5000† psi • 34.5 MPa

† Working pressure should be considered in accordance with ISO 4413 to determine appropriate material type.

Valve Pattern

P06	ISO 6264-06-07 ISO 5781-06-07 NFPA T3.5.1-[R]P06 See Tech Information
P08	ISO 6264-08-11 ISO 5781-08-10 NFPA T3.5.1-[R]P08 See Tech Information
P10	ISO 6264-10-15 ISO 5781-10-13 NFPA T3.5.1-[R]P10 See Tech Information

Product Type

SP	Subplate

Port Location

S	Side ported

Port Threads

P06 only			
08P	0.50-14 NPTF ANSI B1.20.3	**08S**	-8 SAE ISO 11926; SAE 1926
P06 or P08			
12P	0.75-14 NPTF ANSI B1.20.3	**12S**	-12 SAE ISO 11926; SAE 1926
P08 only			
16P	1.00-11.5 NPTF ANSI B1.20.3	**16S**	-16 SAE ISO 11926; SAE 1926
P10 only			
20P	1.25-11.5 NPTF ANSI B1.20.3	**20S**	-20 SAE ISO 11926; SAE 1926
24P	1.50-11.5 NPTF ANSI B1.20.3	**24S**	-24 SAE ISO 11926; SAE 1926

Daman Products Company, Inc. • 1811 North Home Street • Mishawaka, IN 46545-7267
Tel: 800.959.7841 574.259.7841 • Fax: 800.241.7664 • Email: sales@daman.com • www.daman.com

R06, R08, I08, R10, I10 Relief Valve Subplates

R06 (I06) Side Ported Subplate

Valve mtg: UNC 0.50-13 x 1.00 [25] DP
X Port: 0.38-18 NPTF or -6 SAE.
Subplate hardware kit is supplied.
See page 136 for itemized list.

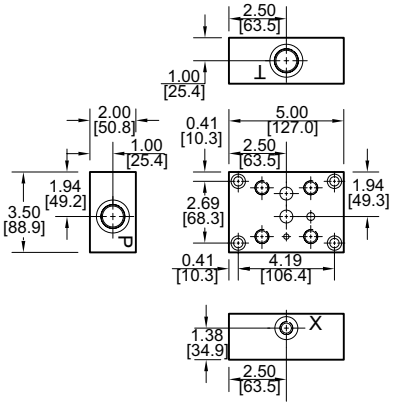

R08, I08 Side Ported Subplate

Valve mtg: UNC 0.63-11 x 1.44 [36] DP
X Port: 0.38-18 NPTF or -6 SAE.
Subplate hardware kit is supplied.
See page 136 for itemized list.

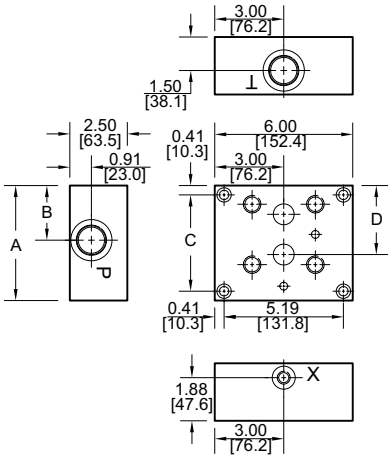

R10, I10 Side Ported Subplate

Valve mtg: UNC 0.75-10 x 1.63 [41] DP
X Port: 0.38-18 NPTF or -6 SAE.
Subplate hardware kit is supplied.
See page 136 for itemized list.

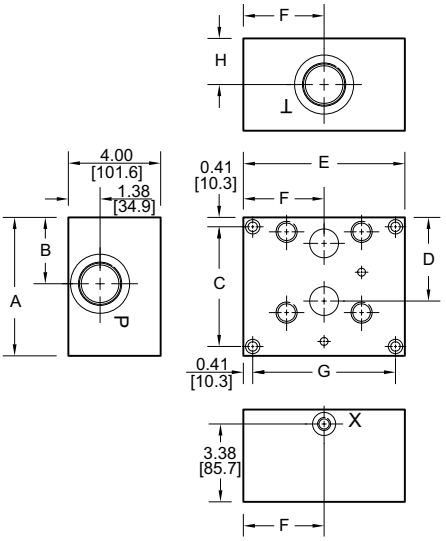

Dimension	A	B	C	D	E	F	G	H
R08SPS12 *R08SPS16*	5.00 [127.0]	** See Note	4.19 [106.4]	3.00 [76.2]	--	--	--	--
I08SPS12 *I08SPS16*	4.50 [114.3]	2.44 [61.9]	3.69 [93.7]	2.75 [69.9]	--	--	--	--
R10SPS20 *R10SPS24*	6.00 [152.4]	2.88 [73.0]	5.19 [131.8]	3.63 [92.1]	7.00 [177.8]	3.50 [88.9]	6.19 [157.2]	2.00 [50.8]
I10SPS20 *I10SPS24*	5.00 [127.0]	2.38 [60.3]	4.19 [106.4]	3.06 [77.8]	7.38 [187.3]	3.69 [93.7]	6.56 [166.7]	2.63 [66.7]

** Dimension "B" for *R08SPS12* is 2.50 [63.5].
Dimension "B" for *R08SPS16* is 2.38 [60.3].

Specifications, descriptions, and dimensional data are subject to correction or change without notice or incurring obligation. Download latest catalog page revisions at www.daman.com.

Ordering Information

Material	Valve Pattern	Product Type	Port Location	Port Threads

For **coating options** see pages 245-246.

Material

A	Aluminum - 6061-T6 3000† psi • 20.7 MPa
D	Ductile Iron - D4512 5000† psi • 34.5 MPa

† Working pressure should be considered in accordance with ISO 4413 to determine appropriate material type.

Valve Pattern

R06	ISO 6264-06-09 NFPA T3.5.1-R06 See Tech Information
R08	ISO 6264-08-13 NFPA T3.5.1-R08 See Tech Information
I08	NFPA T3.5.1-RV08 See Tech Information
R10	ISO 6264-10-17 NFPA T3.5.1-R10 See Tech Information
I10	NFPA T3.5.1-RV10 See Tech Information

Product Type

SP	Subplate

Port Location

S	Side ported

Port Threads

R06 only			
08P	0.50-14 NPTF ANSI B1.20.3	**08S**	-8 SAE ISO 11926; SAE 1926
R06, R08, or I08			
12P	0.75-14 NPTF ANSI B1.20.3	**12S**	-12 SAE ISO 11926; SAE 1926
R08 or I08			
16P	1.00-11.5 NPTF ANSI B1.20.3	**16S**	-16 SAE ISO 11926; SAE 1926
R10 or I10			
20P	1.25-11.5 NPTF ANSI B1.20.3	**20S**	-20 SAE ISO 11926; SAE 1926
24P	1.50-11.5 NPTF ANSI B1.20.3	**24S**	-24 SAE ISO 11926; SAE 1926

Daman Products Company, Inc. • 1811 North Home Street • Mishawaka, IN 46545-7267
Tel: 800.959.7841 574.259.7841 • Fax: 800.241.7664 • Email: sales@daman.com • www.daman.com

Daman®

Subplate Mounting Hardware

Part no.	Cat. pg.	Mounting Screws	Plugs
* D02 SP * 4P, 4S	114	(2) UNC 0.25-20 x 0.88 long SHCS	n/a
* D02 SP * 4B, 4M, 4T	114	(2) ISO 6H M6-1.0 x 22mm SHCS	n/a
* D03 SP * 4P, 6P, 6S	115	(2) UNC 0.25-20 x 0.88 long SHCS	n/a
* D03 SP * 6B, 6M, 6T	115	(2) ISO 6H M6-1.0 x 22mm SHCS	n/a
* D03 SP * 8P, 8S	115	(2) UNC 0.25-20 x 1.50 long SHCS	n/a
* D03 SP * 8B, 8M, 8T	115	(2) ISO 6H M6-1.0 x 40mm SHCS	n/a
* D03 SP S 12P, 12S	115	(2) UNC 0.38-16 x 1.75 long SHCS	n/a
* D03 SP S 12B, 12M, 12T	115	(2) ISO 6H M10-1.5 x 45mm SHCS	n/a
* D03 SP B 12P, 12S	115	(2) UNC 0.38-16 x 1.50 long SHCS	n/a
* D03 SP B 12B, 12M, 12T	115	(2) ISO 6H M10-1.5 x 40mm SHCS	n/a
* D03 SP SB 6P	116	(2) UNC 0.25-20 x 1.50 long SHCS	(2) 0.38-18 NPTF LSPP
* D03 SP SB 6S	116		(2) -6 SAE hex socket plug
* D03 SP SB 6B, 6M, 6T	116	(2) ISO 6H M6-1.0 x 40mm SHCS	n/a
* D03 SP SB 8P	116	(2) UNC 0.25-20 x 2.00 long SHCS	(2) 0.50-14 NPTF LSPP
* D03 SP SB 8S	116		(2) -8 SAE hex socket plug
* D03 SP SB 8B, 8M, 8T	116	(2) ISO 6H M6-1.0 x 50mm SHCS	n/a
* D03 SP M 8*	116	(4) UNC 0.31-18 x 2.50 long SHCS	n/a
* D03 SP RV * 6P	117	(2) UNC 0.31-18 x 2.25 long SHCS	(2) 0.38-18 NPTF LSPP
* D03 SP RV * 6S	117		(2) -6 SAE hex socket plug
* D03 SP RV * 6B, 6M, 6T	117	(2) ISO 6H M8-1.25 x 60mm SHCS	n/a
* D03 SP RV * 8P	117	(2) UNC 0.38-16 x 3.00 long SHCS	(2) 0.50-14 NPTF LSPP
* D03 SP RV * 8S	117		(2) -8 SAE hex socket plug
* D03 SP RV * 8B, 8M, 8T	117	(2) ISO 6H M10-1.5 x 75mm SHCS	n/a
* D03 SP RV * 12P	117	(2) UNC 0.38-16 x 3.00 long SHCS	(2) 0.75-14 NPTF LSPP
* D03 SP RV * 12S	117		(2) -12 SAE hex socket plug
* D03 SP RV * 12B, 12M, 12T	117	(2) ISO 6H M10-1.5 x 75mm SHCS	n/a
* D03 SP CR * 6P, 6S	118	(2) UNC 0.31-18 x 2.50 long SHCS	n/a
* D03 SP CR * 6B, 6M, 6T	118	(2) ISO 6H M8-1.25 x 65mm SHCS	n/a
* D03 SP CR * 12P, 12S	118	(2) UNC 0.38-16 x 4.00 long SHCS	n/a
* D03 SP CR * 12B, 12M, 12T	118	(2) ISO 6H M10-1.5 x 100mm SHCS	n/a
* D05 SP S 6P, 8P, 8S	119	(2) UNC 0.38-16 x 1.25 long SHCS	n/a
* D05 SP S 8B, 8M, 8T	119	(2) ISO 6H M10-1.5 x 35mm SHCS	n/a
* D05 SP B 6P, 8P, 8S	119	(2) UNC 0.38-16 x 1.25 long SHCS	n/a
* D05 SP B 8B, 8M, 8T	119	(2) ISO 6H M10-1.5 x 35mm SHCS	n/a
* D05 SP SB 8P	120	(2) UNC 0.38-16 x 1.50 long SHCS	(2) 0.50-14 NPTF LSPP
* D05 SP SB 8S	120		(2) -8 SAE hex socket plug
* D05 SP SB 8B, 8M, 8T	120	(2) ISO 6H M10-1.5 x 40mm SHCS	n/a
* D05H(E) SP * 12P, 12S	121, 122	(2) UNC 0.38-16 x 1.75 long SHCS	n/a
* D05H(E) SP * 12B, 12M, 12T	121, 122	(2) ISO 6H M10-1.5 x 45mm SHCS	n/a
* D05J(E) SP S 16P, 16S	121, 122	(2) UNC 0.38-16 x 3.00 long SHCS	n/a
* D05J(E) SP S 16B, 16M, 16T	121, 122	(2) ISO 6H M10-1.5 x 75mm SHCS	n/a
* D05J(E) SP B 16P, 16S	121, 122	(2) UNC 0.38-16 x 3.25 long SHCS	n/a
* D05J(E) SP B 16B, 16M, 16T	121, 122	(2) ISO 6H M10-1.5 x 90mm SHCS	n/a
* D05 SP RV * 8P	123	(2) UNC 0.38-16 x 2.50 long SHCS	(2) 0.50-14 NPTF LSPP
* D05 SP RV * 8S	123		(2) -8 SAE hex socket plug
* D05 SP RV * 8B, 8M, 8T	123	(2) ISO 6H M10-1.5 x 65mm SHCS	n/a
* D05H SP RV * 12P	124	(2) UNC 0.38-16 x 3.00 long SHCS	(2) 0.25-18 NPTF LSPP (2) 0.75-14 NPTF LSPP
* D05H SP RV * 12S	124		(2) -4 SAE hex socket plug (2) -12 SAE hex socket plug
* D05H SP RV * 12B, 12M, 12T	124	(2) ISO 6H M10-1.5 x 75mm SHCS	n/a

Daman Products Company, Inc. • 1811 North Home Street • Mishawaka, IN 46545-7267
Tel: 800.959.7841 574.259.7841 • Fax: 800.241.7664 • Email: sales@daman.com • www.daman.com

Subplate Mounting Hardware

Part no.	Cat. pg.	Mounting Screws	Plugs
* D05J SP RV * 16P	124	(2) UNC 0.38-16 x 4.00 long SHCS	(2) 0.25-18 NPTF LSPP (2) 1.00-11.5 NPTF LSPP
* D05J SP RV * 16S	124		(2) -4 SAE hex socket plug (2) -16 SAE hex socket plug
* D05J SP RV * 16B, 16M, 16T	124	(2) ISO 6H M10-1.5 x 100mm SHCS	n/a
* D05 SP CR * 8P, 8S	123	(2) UNC 0.38-16 x 2.00 long SHCS	n/a
* D05 SP CR * 8B, 8M, 8T	123	(2) ISO 6H M10-1.5 x 50mm SHCS	n/a
* D05H SP CR * 12P	125	(2) UNC 0.38-16 x 4.50 long SHCS	(2) 0.25-18 NPTF LSPP
* D05H SP CR * 12S	125		(2) -4 SAE hex socket plug
* D05H SP CR * 12B, 12M, 12T	125	(2) ISO 6H M10-1.5 x 120mm SHCS	n/a
* D05J SP CR * 16P	125	(2) UNC 0.38-16 x 4.50 long SHCS	(2) 0.25-18 NPTF LSPP
* D05J SP CR * 16S	125		(2) -4 SAE hex socket plug
* D05J SP CR * 16B, 16M, 16T	125	(2) ISO 6H M10-1.5 x 120mm SHCS	n/a
* D07 SP S* 12P, 12S	126	(2) UNC 0.38-16 x 1.25 long SHCS	n/a
* D07 SP S* 12B, 12M, 12T	126	(2) ISO 6H M10-1.5 x 35mm SHCS	n/a
* D07 SP SO 16P, 16S	126	(2) UNC 0.38-16 x 3.00 long SHCS	n/a
* D07 SP SO 16B, 16M, 16T	126	(2) ISO 6H M10-1.5 x 75mm SHCS	n/a
* D07 SP B 12P, 12S	126	(2) UNC 0.38-16 x 1.50 long SHCS	n/a
* D07 SP B 12B, 12M, 12T	126	(2) ISO 6H M10-1.5 x 35mm SHCS	n/a
* D07 SP B 16P, 16S	126	(2) UNC 0.38-16 x 2.75 long SHCS	n/a
* D07 SP B 16B, 16M, 16T	126	(2) ISO 6H M10-1.5 x 70mm SHCS	n/a
* D07 SP RV C 12P	127	(2) UNC 0.38-16 x 2.75 long SHCS	(2) 0.75-14 NPTF LSPP
* D07 SP RV C 12S	127		(2) -12 SAE hex socket plug
* D07 SP RV C 12B, 12M, 12T	127	(2) ISO 6H M10-1.5 x 70mm SHCS	n/a
* D07 SP RV S 12P	127	(2) UNC 0.38-16 x 2.50 long SHCS	(2) 0.75-14 NPTF LSPP
* D07 SP RV S 12S	127		(2) -12 SAE hex socket plug
* D07 SP RV S 12B, 12M, 12T	127	(2) ISO 6H M10-1.5 x 65mm SHCS	n/a
* D07 SP RV * 16P	127	(3) UNC 0.38-16 x 4.00 long SHCS	(2) 1.00-11.5 NPTF LSPP
* D07 SP RV * 16S	127		(2) -16 SAE hex socket plug
* D07 SP RV * 16B, 16M, 16T	127	(3) ISO 6H M10-1.5 x 100mm SHCS	n/a
* D08 SP S* 12P, 16P, 16S	128	(2) UNC 0.50-13 x 1.75 long SHCS	n/a
* D08 SP S* 16B, 16M, 16T	128	(2) ISO 6H M12-1.75 x 45mm SHCS	n/a
* D08 SP SO 20P, 20S	128	(2) UNC 0.50-13 x 3.00 long SHCS	n/a
* D08 SP SO 20B, 20M, 20T	128	(2) ISO 6H M12-1.75 x 100mm SHCS	n/a
* D08 SP B 12P, 16P, 16S	128	(2) UNC 0.50-13 x 1.50 long SHCS	n/a
* D08 SP B 16B, 16M, 16T	128	(2) ISO 6H M12-1.75 x 40mm SHCS	n/a
* D08 SP B 20P, 20S	128	(4) UNC 0.38-16 x 2.00 long SHCS	n/a
* D08 SP B 20B, 20M, 20T	128	(4) ISO 6H M10-1.5 x 50mm SHCS	n/a
* D08 SP RV * 16P	129	(2) UNC 0.38-16 x 3.00 long SHCS	(2) 1.00-11.5 NPTF LSPP
* D08 SP RV * 16S	129		(2) -16 SAE hex socket plug
* D08 SP RV * 16B, 16M, 16T	129	(2) ISO 6H M10-1.5 x 75mm SHCS	n/a
* D08 SP RV * 20P	129	n/a	(2) 1.25-11.5 NPTF LSPP
* D08 SP RV * 20S	129		(2) -20 SAE hex socket plug
* D08 SP RV * 20B, 20M, 20T	129	n/a	n/a

Chart continued on next page

Daman Products Company, Inc. • 1811 North Home Street • Mishawaka, IN 46545-7267
Tel: 800.959.7841 574.259.7841 • Fax: 800.241.7664 • Email: sales@daman.com • www.daman.com

Subplate Mounting Hardware

Part no.	Cat. pg.	Mounting Screws	Plugs
* D10 SP S O 20P	130	(4) UNC 0.50-13 x 3.50 long SHCS	n/a
* D10 SP S O 24P, 24S	130	(4) UNC 0.50-13 x 4.00 long SHCS	n/a
* D10 SP S O 32P, 32S	130	(4) UNC 0.50-13 x 4.50 long SHCS	n/a
* D10 SP B 20P	130	(4) UNC 0.50-13 x 2.00 long SHCS	n/a
* D10 SP B 24P, 24S	130	(4) UNC 0.50-13 x 2.00 long SHCS	n/a
* D10 SP B 32P, 32S	130	(4) UNC 0.50-13 x 2.50 long SHCS	n/a
* 2F06 SP S 6P, 8P, 8S	131	(2) UNC 0.38-16 x 1.25 long SHCS	n/a
* 2F07 SP S 8P, 8S	131	(2) UNC 0.38-16 x 1.25 long SHCS	n/a
* P06 SP S 08P, 08S, 12P, 12S	132	(4) UNC 0.38-16 x 2.00 long SHCS	n/a
* P08 SP S 12P, 12S, 16P, 16S	132	(4) UNC 0.38-16 x 2.00 long SHCS	n/a
* P10 SP S 20P, 20S, 24P, 24S	132	(4) UNC 0.38-16 x 3.00 long SHCS	n/a
* R06 SP S 08P, 08S, 12P, 12S	133	(4) UNC 0.38-16 x 2.00 long SHCS	n/a
* R08 SP S 12P, 12S, 16P, 16S	133	(4) UNC 0.38-16 x 2.50 long SHCS	n/a
* I08 SP S 12P, 12S, 16P, 16S	133	(4) UNC 0.38-16 x 2.50 long SHCS	n/a
* R10 SP S 20P, 20S, 24P, 24S	133	(4) UNC 0.38-16 x 4.00 long SHCS	n/a
* I10 SP S 20P, 20S, 24P, 24S	133	(4) UNC 0.38-16 x 4.00 long SHCS	n/a

Daman Products Company, Inc. • 1811 North Home Street • Mishawaka, IN 46545-7267
Tel: 800.959.7841 574.259.7841 • Fax: 800.241.7664 • Email: sales@daman.com • www.daman.com

SERVO VALVE SUBPLATES

Servo Valve Cross Reference	Pages 139-141
S01 (0.480 port circle) Subplates	Page 142
S02, S83 (0.625 port circle) Subplates	Page 143
S03, S71 (0.780 port circle) Subplates	Page 143
S72 (0.938 port circle) Subplates	Page 143
S85 (0.850 port circle) Subplates	Page 143
S02 (0.625 port circle) Tapping Plates	Page 143
S71 (0.780 port circle) Tapping Plates	Page 143
S04 (0.875 port circle) Subplates	Page 144
S04 (0.875 port circle) Tapping Plates	Page 144
S06 (2.000 port circle) Subplates	Page 145
S06 (2.000 port circle) Tapping Plates	Page 145
S73 (1.375 port circle) Subplates	Page 146
S74 (1.750 port circle) Subplates	Page 147
S76 Subplates	Page 148
S77 (1.750 port circle) Subplates	Page 149
S78 Subplates	Page 150
S82 Subplates	Page 151
S87 Subplates	Page 151
S90 Subplates	Page 152
S92 Subplates	Page 152
D05 Servo Tapping Plates	Page 153
Mounting Hardware	Page 154

Servo Valve Cross Reference

Daman pattern no.	ISO no.	Port Circle	CEI	HR Textron	Moog	Moog / Atchley	Moog / Pegasus	MTS	Parker	Rexroth	Vickers
S01	10372-01	0.480	--	27A 1)5)	30 1)5) 260 1)5)	--	--	--	SEMT 1)	--	--
S02	10372-02	0.625	JP-5 JP-10	--	31 261 1) 77-100 6) 771 774	206 1)6) 208A 3) 209 1)	20 2) 105H 2) 122A 2) 125	--	SE05	--	--
S03	10372-03	0.780	--	--	77-200	207-optional 1)7)	132A 2)12)	--	--	--	SM4-12 SX4-12
S04	10372-04	0.875	90700 JP-20	27E	62 730 730-HP8 760 4) 760-HP8 761HR 4) D761 D765 3) G761	215A 3) 320	142M 1) 142MP 2)4) 162M 2) 162MP 2)4)	252.2X 252.4X	BD15 PH76 SE20 3) SE2E 3)	3)9) 4WS*2E*10A-4X	SM4-20 4) SX4-20 4)
S06	10372-06	2.000	--	--	72 3) 79-100 4)8) D791 4)	261 1)	1282A 1282AD 1282ADL 1282B	252.3X	SE60 3)	3)10) 4WS*2E*16A-2X	--
S71	--	0.780	--	27C 1)	15 32 34 262 1) 264 1) 755 772 77-200-optional	207 1)11) 211A 3) 214 1)3)	--	--	SE10	--	--
S72	--	0.938	JP-15	--	773 77-500	218 1)	142A 2)12) 162A 2)12) 162R 2)12) 212 2)12) 235 2)12)	--	SE15	--	SM4-15 SX4-15
S73	--	1.375	JP-25	--	743 3)	225A 3) 225B 3)	--	--	SE2N 425	--	--
S74	--	1.750	--	--	--	--	1330	--	--	--	--

NOTES:
1) This valve does not have a locating pin, therefore the pattern does not require a locating pin hole.
2) The A & B (C1 & C2) ports are reversed on these valves compared to the ISO standard or the majority of other manufacturers valves.
3) These valves have an optional pilot port conforming to ISO standards or the majority of other manufacturers valves.
4) These valves have an optional pilot port which does not conform to ISO standards.
5) These valves use mounting threads which do not conform to the ISO standard of M4.
6) The S02 mounting pattern has #10-32 or M5 mounting threads. If using the optional 1/4-20 or M6 bolts use the S83 valve pattern.
7) The S03 mounting pattern has #1/4-20 or M6 mounting threads. If using the optional #10-32 or M5 bolts use the S71 valve pattern.
8) The ports on this valve are 90 degrees out of phase with the ISO standard and all other valves using this pattern.
9) Manufacturer's catalog states that this valve is also in conformance with CETOP RP115H type 4.
10) Manufacturer's catalog states that this valve is also in conformance with CETOP RP115H type 5.
11) The S71 mounting pattern has #10-32 or M5 mounting threads. If using the optional 1/4-20 or M6 bolts use the S03 valve pattern.
12) Manufacturer calls for 1/4-28 valve mounting threads. Daman's S03 & S72 standard products have 1/4-20 threads.

Daman Products Company, Inc. • 1811 North Home Street • Mishawaka, IN 46545-7267
Tel: 800.959.7841 574.259.7841 • Fax: 800.241.7664 • Email: sales@daman.com • www.daman.com

Daman®

Servo Valve Cross Reference

Daman pattern no.	ISO no.	Port Circle	CEI	Continental	HR Textron	Moog	Moog / Atchley	Moog / Pegasus	Parker / Dyval	Rexroth	Vickers
S75 [1]	--	2.750	--	--	--	--	3100	--	--	--	--
S76	--	--	--	--	--	62-300	241	--	--	--	SM4-30
S77	--	1.750	90800 JP-40	--	27G	78	240	180L [3) 7)] 180R [3) 7)]	BD30	--	SM4-40 [4)]
S78	--	--	--	--	--	79-200 79-200HR D792	--	1800	--	--	--
S79 [1]	--	--	--	--	--	D643-optional [5)] D644-optional [5)]	--	--	--	--	--
S81 [1]	--	--	--	--	--	--	231 242	--	--	--	--
S82	--	--	--	--	--	--	--	--	--	4DS*1E02-1X	--
S83	--	0.625	--	--	--	77-100-optional [6)]	206-optional [2) 6)]	--	--	--	SM4-10 SX4-10
S84 [1]	--	0.740	--	--	--	--	202PN	--	--	--	--
S85	--	0.850	--	SV850M	--	--	--	--	DY01 DY1S DY05 DY10 10PS DY12	--	--
S86 [1]	--	1.000	--	--	--	265 [2)] 35	--	--	--	--	--
S87	--	1.000	--	SV1000M	--	--	--	--	DY15 DY25	--	--
S88 [1]	--	1.800	--	SV1800M	--	--	--	--	DY45 45PS	--	--
S89 [1]	--	--	--	--	--	--	--	--	PC-2	--	--
S90	--	1.000	--	--	--	--	--	--	DY2S 2-SP	--	--
S91 [1]	--	--	--	--	--	--	--	--	5P 10P	--	--
S92	--	--	--	--	--	--	--	--	DY3H DY6H	--	--

NOTES:
1) These patterns are identified for reference purposes. Standard subplates are not available. See pages 2-3 for information requesting a custom subplate.
2) This valve does not have a locating pin, therefore the pattern does not require a locating pin hole.
3) The A & B (C1 & C2) ports are reversed on these valves compared to the ISO standard or the majority of other manufacturers valves.
4) These valves have an optional pilot port conforming to ISO standards or the majority of other manufacturers valves.
5) The S79 mounting pattern has 7/16-14 mounting threads. If using the optional M12 or 1/2-13 bolts use the D08 valve pattern.
6) The S83 mounting pattern has 1/4-20 or M6 mounting threads. If using the optional #10-32 or M5 bolts use the S02 valve pattern.
7) Manufacturer calls for 5/16-24 valve mounting threads. Daman's S77 standard products have 5/16-18 threads.

Daman Products Company, Inc. • 1811 North Home Street • Mishawaka, IN 46545-7267
Tel: 800.959.7841 574.259.7841 • Fax: 800.241.7664 • Email: sales@daman.com • www.daman.com

Servo Valve Cross Reference

Daman pattern no.	ISO no.	Port Circle	CEI	HR Textron	Moog	Moog / Atchley / Pegasus	Parker/ Dyval	Rexroth	Vickers
S93 [1]	--	0.850	--	--	--	--	10-1100	--	--
S94 [1]	--	--	--	--	744	290	--	--	--
S95 [1]	--	2.000	--	--	--	--	DY90	--	--
D03	4401-03-03	--	--	27B	D633 [5] D636 [5] D635 [5] D638 [5]	40	--	4WS*2EM6-1X [2]	--
D05HE	4401-05-05	--	--	--	D634 [6] D681 [7] D661 [7] D691 [7]	--	--	4WS*2E*10-5X	--
D05-S1	4401-05-05	--	--	--	631 [4] 631-500 [4] 641 [4] 641-100 [4] 651 [4]	--	--	--	--
D05-S2	4401-05-05	--	--	--	G631 [4]	--	--	--	--
D05-S3	4401-05-05	--	--	--	--	--	SE31 [4]	--	--
D05-S4	4401-05-05	--	--	--	--	--	--	3DS*2E*10-2X [4] 4WS*2E*10-4X [4]	--
D05-S5	4401-05-05	--	90200 [4] [16]	--	--	--	--	--	--
D06	--	--	90300 [4]	--	--	--	--	--	--
D07	4401-07-06	--	--	--	D642 [8] [15] D662 [8] D652 [8] D682 [8]	--	--	4WS*2E*16-2X [3] 4WSE3EE16-1X [3]	--
D08	4401-08-07	--	90600	--	D643 [9] D663 [11] D644 [9] D664 [12] D653 [10] D683 [11] D654 [10] D684 [12]	--	--	4WSE3EE25-2X [3]	--
D10	4401-10-08	--	--	--	D645 [13] D665 [14] D685 [14]	--	--	4WSE3EE32-4X [3]	--

NOTES:
1) These patterns are identified for reference purposes. Standard subplates are not available. See pages 2-3 for information requesting a custom subplate.
2) This valve does not have a locating pin, therefore the pattern does not require a locating pin hole.
3) These valves have an optional pilot port conforming to ISO standards or the majority of other manufacturers valves.
4) These valves have an optional pilot port which does not conform to NFPA / ISO standards.
5) Pattern conforms to ISO 4401-03-03-0-94 without X port; Y port is optional. Ports are 7.5mm dia for full flow. Mounting threads are M5.
6) Pattern conforms to ISO 4401-05-05-0-94 without X port; Y port is optional. Mounting threads are M6.
7) Pattern conforms to ISO 4401-05-05-0-94 without X port; Y port is optional. Ports are 11.5mm dia for full flow. Mounting threads are M6.
8) Pattern conforms to ISO 4401-07-06-0-94 except ports are 20mm dia for full flow. Mounting threads are M10 and M6.
9) Pattern conforms to ISO 4401-08-07-0-94. Mounting threads are M12. If using the optional 7/16-14 bolts use the S79 valve pattern.
10) Pattern conforms to ISO 4401-08-07-0-94. Mounting threads are M12.
11) Pattern conforms to ISO 4401-08-07-0-94 except ports are 28mm dia for full flow. Mounting threads are M12.
12) Pattern conforms to ISO 4401-08-07-0-94 except ports are 32mm dia for full flow. Mounting threads are M12.
13) Pattern conforms to ISO 4401-10-08-0-94. Mounting threads are M20.
14) Pattern conforms to ISO 4401-10-08-0-94 except ports are 50mm dia for full flow. Mounting threads are M20.
15) Manufacturer calls for 3/8-24; 1/4-28 valve mounting threads. Daman's D07 standard products have 3/8-16; 1/4-20 threads.
16) Manufacturer calls for 1/4-28 valve mounting threads. Daman's D05 standard products have 1/4-20 threads.

Daman Products Company, Inc. • 1811 North Home Street • Mishawaka, IN 46545-7267
Tel: 800.959.7841 574.259.7841 • Fax: 800.241.7664 • Email: sales@daman.com • www.daman.com

Daman S01 Servo Subplate
0.480 Port Circle

Side Ported Subplate

Valve mtg: UNC #6-32 x 0.50 DP or
Metric M4-0.7mm ISO 6H x [12] DP
Subplate hardware kit is supplied.
See page 154 for itemized list.

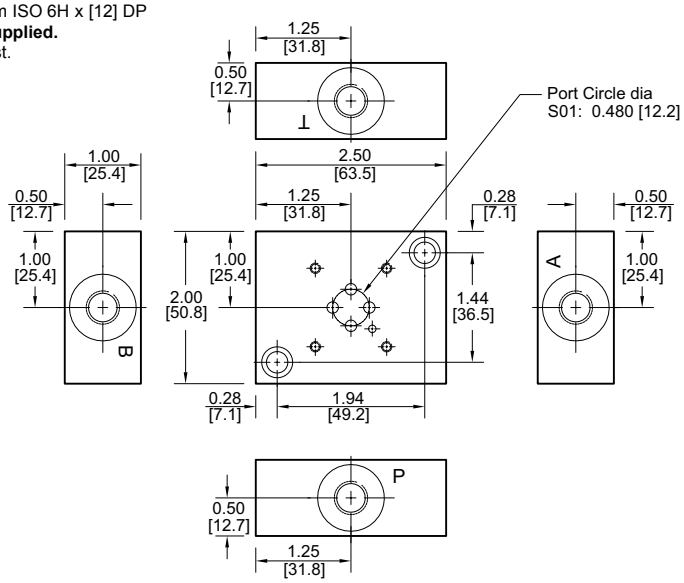

Specifications, descriptions, and dimensional data are subject to correction or change without notice or incurring obligation. Download latest catalog page revisions at www.daman.com.

Ordering Information

Material	Servo Valve Pattern	Product Type	Port Location	Port Threads

For **coating options** see pages 245-246.

Material

A	Aluminum - 6061-T6 3000† psi • 20.7 MPa
D	Ductile Iron - D4512 5000† psi • 34.5 MPa

† Working pressure should be considered in accordance with ISO 4413 to determine appropriate material type.

Product Type

SP	Subplate

Port Threads

4S	-4 SAE ISO 11926; SAE 1926
4M	M10 x 1.0 ISO 6149

Servo Pattern

S01	ISO 10372-01-01 Daman std. S01 See page 139 and Tech Info

Port Location

S	Side ported

Daman Products Company, Inc. • 1811 North Home Street • Mishawaka, IN 46545-7267
Tel: 800.959.7841 574.259.7841 • Fax: 800.241.7664 • Email: sales@daman.com • www.daman.com

Daman®

Daman S02, S03, S71, S72, S83, S85 Servo Subplate; S02, S71 Pilot Port Tapping Plate

0.625, 0.780, 0.850, 0.938 Port Circle

Side Ported Subplate

Valve mtg S02, S71: UNF #10-32 x 0.63 DP or Metric M5-0.8mm ISO 6H x [16] DP
Valve mtg S03: UNF 0.25-28 x 0.75 DP or Metric M6-1.0mm ISO 6H x [19] DP
Valve mtg S72, S83, S85: UNC 0.25-20 x 0.75 DP or Metric M6-1.0mm ISO 6H x [19] DP
Subplate hardware kit is supplied.
See page 154 for itemized list.

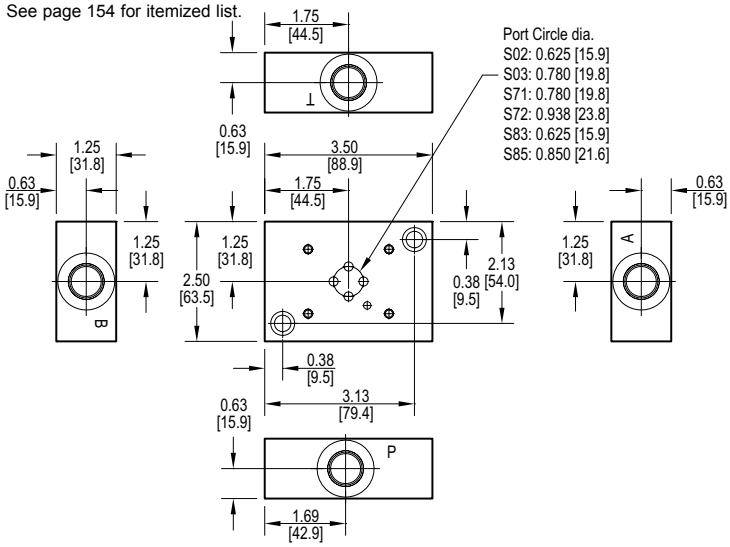

Pilot Port Tapping Plate (S02, S71 Patterns only)

Subplate interface seal kit is supplied.
See page 154 for itemized list.

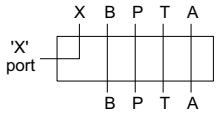

Use this tapping plate when an external pilot port is required. This tapping plate stacks between the valve and subplate. Valve mounting bolts of sufficient length to pass through the valve and this tapping plate are supplied by the user.

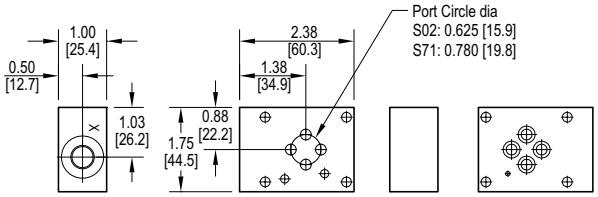

Specifications, descriptions, and dimensional data are subject to correction or change without notice or incurring obligation. Download latest catalog page revisions at www.daman.com.

Ordering Information

Material	Servo Valve Pattern	Product Type	Port Location / Circuit	Port Threads

For **coating options** see pages 245-246.

Material

A	Aluminum - 6061-T6 3000† psi • 20.7 MPa
D	Ductile Iron - D4512 5000† psi • 34.5 MPa

† Working pressure should be considered in accordance with ISO 4413 to determine appropriate material type.

Servo Pattern
See page 139 and Tech Info

S02	ISO 10372-02-02 Daman std. S02
S03	ISO 10372-03-03 Daman std. S03
S71	Daman std. S71
S72	Daman std. S72
S83	Daman std. S83
S85	Daman std. S85

Product Type

SP	Subplate
TP	Tapping Plate S02 or S71 only

Port Loc. / Circuit

S	Side ported (Subplate only)
X	X Port (Tapping Plate only)

Port Threads

Subplate Port Sizes Only	
8S	-8 SAE ISO 11926; SAE 1926
8M	M18 x 1.5 ISO 6149
Tapping Plate Port Sizes Only	
4S	-4 SAE ISO 11926; SAE 1926
4M	M10 x 1.0 ISO 6149

Daman Products Company, Inc. • 1811 North Home Street • Mishawaka, IN 46545-7267
Tel: 800.959.7841 574.259.7841 • Fax: 800.241.7664 • Email: sales@daman.com • www.daman.com

Daman S04 Servo Subplate, Pilot Port Tapping Plate 0.875 Port Circle

Side Ported Subplate

Valve mtg: UNC 0.31-18 UNC x 0.88 DP or
Metric M8-1.25mm ISO 6H x [22.2] DP
Subplate hardware kit is supplied.
See page 154 for itemized list.

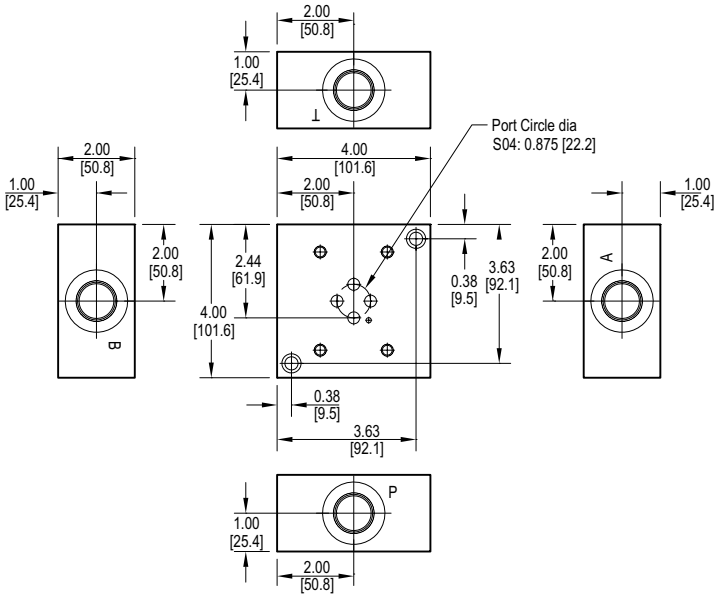

Pilot Port Tapping Plate

Subplate interface seal kit is supplied.*
See page 154 for itemized list.
* Plug not included on metric ported parts.

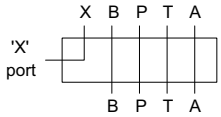

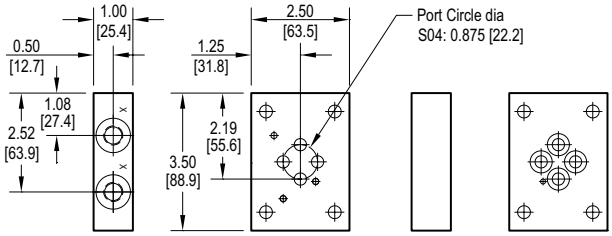

Use this tapping plate when an external pilot port is required. Two ports are provided to facilitate the various valves available. This tapping plate stacks between the valve and subplate. Valve mounting bolts of sufficient length to pass through the valve and this tapping plate are supplied by the user.

Specifications, descriptions, and dimensional data are subject to correction or change without notice or incurring obligation. Download latest catalog page revisions at www.daman.com.

Ordering Information

Material	Servo Valve Pattern	Product Type	Port Location / Circuit	Port Threads

For **coating options** see pages 245-246.

Material

A	Aluminum - 6061-T6 3000† psi • 20.7 MPa
D	Ductile Iron - D4512 5000† psi • 34.5 MPa

† Working pressure should be considered in accordance with ISO 4413 to determine appropriate material type.

Servo Pattern
See page 139 and Tech Info

S04	ISO 10372-04-04 Daman std. S04

Product Type

SP	Subplate
TP	Tapping Plate

Port Loc. / Circuit

S	Side ported (Subplate only)
X	X Port (Tapping Plate only)

Port Threads

Subplate Port Sizes Only	
12S	-12 SAE ISO 11926; SAE 1926
12M	M27 x 2.0 ISO 6149
Tapping Plate Port Sizes Only	
4S	-4 SAE ISO 11926; SAE 1926
4M	M10 x 1.0 ISO 6149

Daman Products Company, Inc. • 1811 North Home Street • Mishawaka, IN 46545-7267
Tel: 800.959.7841 574.259.7841 • Fax: 800.241.7664 • Email: sales@daman.com • www.daman.com

Daman S06 Servo Subplate, Pilot Port Tapping Plate 2.000 Port Circle

Side Ported Subplate

Valve mtg: UNC 0.38-16 UNC x 1.00 DP or
Metric M10-1.5mm ISO 6H x [25.4] DP
Subplate hardware kit is supplied.
See page 154 for itemized list.

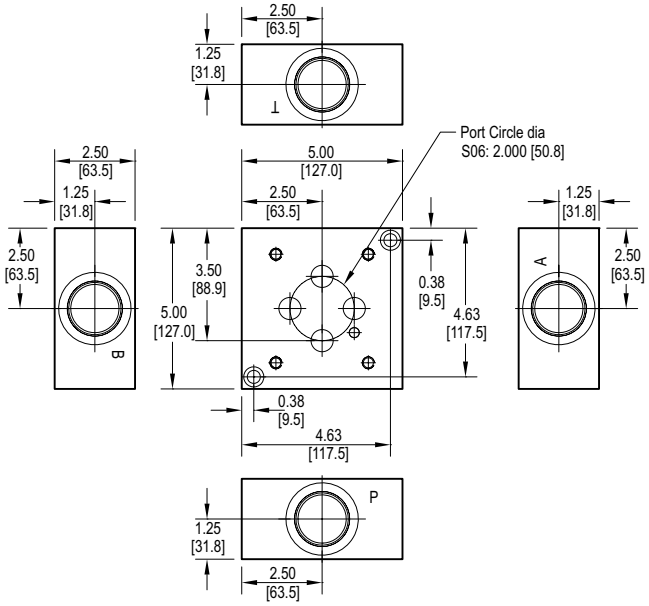

Pilot Port Tapping Plate

Subplate interface seal kit is supplied.*
See page 154 for itemized list.
* Plug not included on metric ported parts.

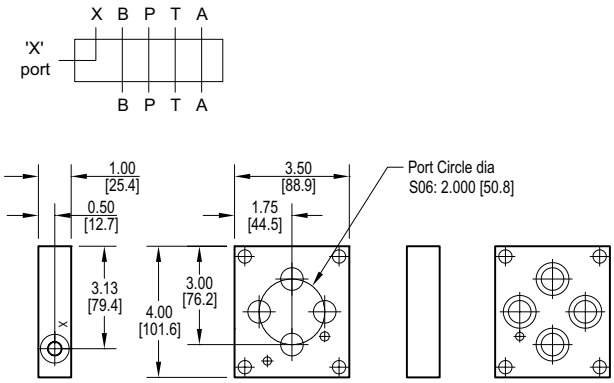

Use this tapping plate when an external pilot port is required. This tapping plate stacks between the valve and subplate. Valve mounting bolts of sufficient length to pass through the valve and this tapping plate are supplied by the user.

Specifications, descriptions, and dimensional data are subject to correction or change without notice or incurring obligation. Download latest catalog page revisions at www.daman.com.

Ordering Information

Material	Servo Valve Pattern	Product Type	Port Location / Circuit	Port Threads

For **coating options** see pages 245-246.

Material

A	Aluminum - 6061-T6 3000† psi • 20.7 MPa
D	Ductile Iron - D4512 5000† psi • 34.5 MPa

† Working pressure should be considered in accordance with ISO 4413 to determine appropriate material type.

Servo Pattern
See page 139 and Tech Info

S06	ISO 10372-06-05 Daman std. S06

Product Type

SP	Subplate
TP	Tapping Plate

Port Loc. / Circuit

S	Side ported (Subplate only)
X	X Port (Tapping Plate only)

Port Threads

Subplate Port Sizes Only	
20S	-20 SAE ISO 11926; SAE 1926
20M	M42 x 2.0 ISO 6149
Tapping Plate Port Sizes Only	
4S	-4 SAE ISO 11926; SAE 1926
4M	M10 x 1.0 ISO 6149

Daman Products Company, Inc. • 1811 North Home Street • Mishawaka, IN 46545-7267
Tel: 800.959.7841 574.259.7841 • Fax: 800.241.7664 • Email: sales@daman.com • www.daman.com

Daman S73 Servo Subplate
1.375 Port Circle

Side Ported Subplate

Valve mtg: UNC 0.31-18 x 0.88 DP or
Metric M8-1.25mm ISO 6H x [22.2] DP
Subplate hardware kit is supplied.
See page 154 for itemized list.

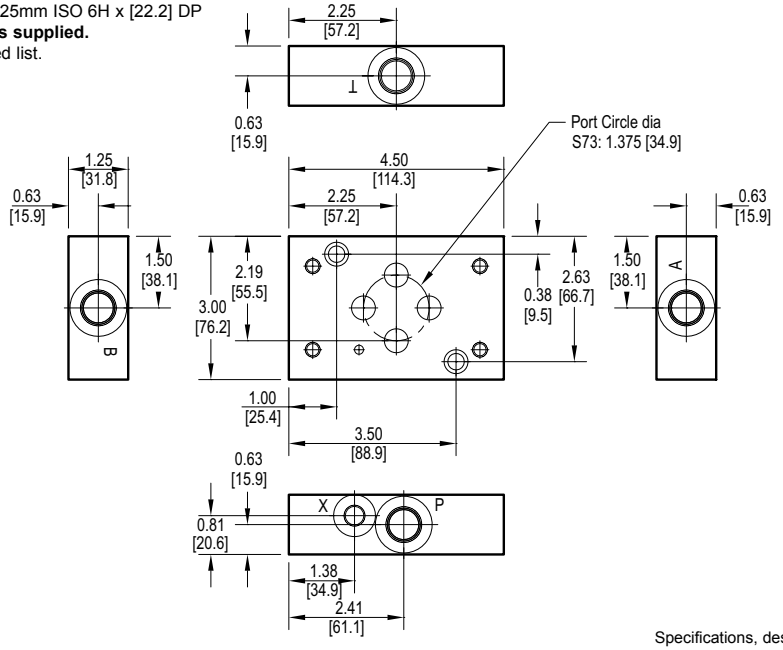

Specifications, descriptions, and dimensional data are subject to correction or change without notice or incurring obligation. Download latest catalog page revisions at www.daman.com.

Ordering Information

Material	Servo Valve Pattern	Product Type	Port Location	Port Threads

For **coating options** see pages 245-246.

Material

A	Aluminum - 6061-T6 3000† psi • 20.7 MPa
D	Ductile Iron - D4512 5000† psi • 34.5 MPa

† Working pressure should be considered in accordance with ISO 4413 to determine appropriate material type.

Product Type

SP	Subplate

Port Threads

8S	-8 SAE ISO 11926; SAE 1926 (X port is -4 SAE)
8M	M18 x 1.5 ISO 6149 (X port is M10 x 1.0)

Servo Pattern

S73	Daman S73 See page 139 and Tech Info

Port Location

S	Side ported

Daman Products Company, Inc. • 1811 North Home Street • Mishawaka, IN 46545-7267
Tel: 800.959.7841 574.259.7841 • Fax: 800.241.7664 • Email: sales@daman.com • www.daman.com

Daman®

Daman S74 Servo Subplate

1.750 Port Circle

Side Ported Subplate

Valve mtg: UNF 0.31-24 x 0.88 DP or
Metric M8-1.25mm ISO 6H x [22.2] DP
Subplate hardware kit is supplied.
See page 154 for itemized list.

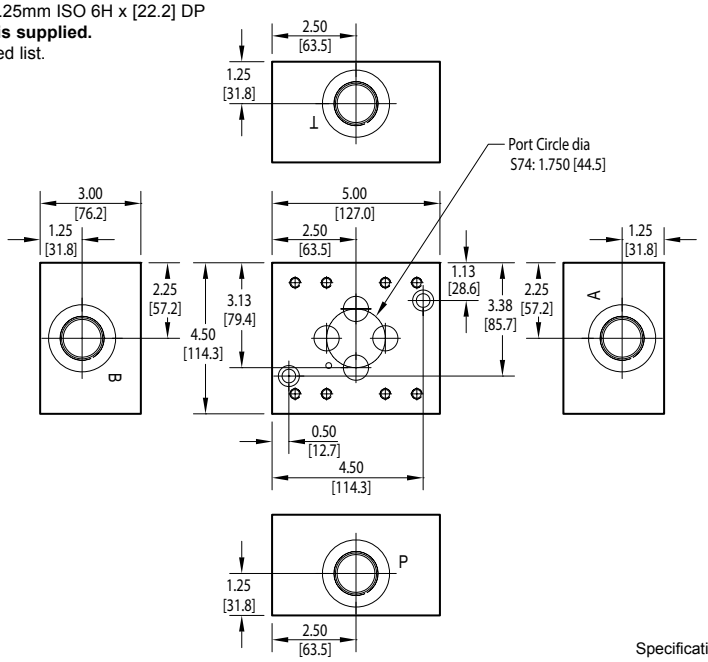

Specifications, descriptions, and dimensional data are subject to correction or change without notice or incurring obligation. Download latest catalog page revisions at www.daman.com.

Ordering Information

Material	Servo Valve Pattern	Product Type	Port Location	Port Threads

For **coating options** see pages 245-246.

Material

A	Aluminum - 6061-T6 3000† psi • 20.7 MPa
D	Ductile Iron - D4512 5000† psi • 34.5 MPa

† Working pressure should be considered in accordance with ISO 4413 to determine appropriate material type.

Product Type

SP	Subplate

Port Threads

16S	-16 SAE ISO 11926; SAE 1926
16M	M33 x 2.0 ISO 6149

Servo Pattern

S74	Daman S74 See page 139 and Tech Info

Port Location

S	Side ported

Daman Products Company, Inc. • 1811 North Home Street • Mishawaka, IN 46545-7267
Tel: 800.959.7841 574.259.7841 • Fax: 800.241.7664 • Email: sales@daman.com • www.daman.com

Daman S76 Servo Subplate

Side Ported Subplate

Valve mtg: UNC 0.25-20 x 0.75 DP or
Metric M6-1.0mm ISO 6H x [19] DP
Subplate hardware kit is supplied.
See page 154 for itemized list.

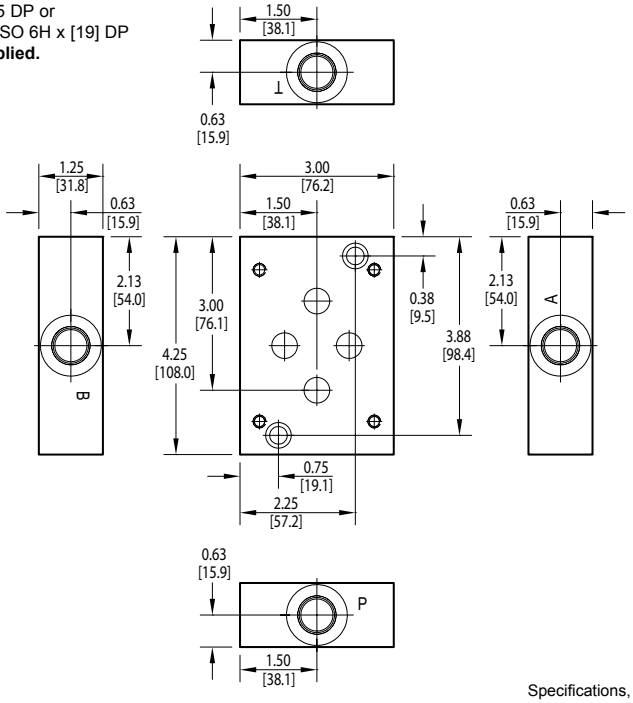

Specifications, descriptions, and dimensional data are subject to correction or change without notice or incurring obligation. Download latest catalog page revisions at www.daman.com.

Ordering Information

Material	Servo Valve Pattern	Product Type	Port Location	Port Threads

For **coating options** see pages 245-246.

Material

A	Aluminum - 6061-T6 3000† psi • 20.7 MPa
D	Ductile Iron - D4512 5000† psi • 34.5 MPa

† Working pressure should be considered in accordance with ISO 4413 to determine appropriate material type.

Product Type

SP	Subplate

Port Threads

8S	-8 SAE ISO 11926; SAE 1926
8M	M18 x 1.5 ISO 6149

Servo Pattern

S76	Daman std. S76 See page 140 and Tech Info

Port Location

S	Side ported

Daman Products Company, Inc. • 1811 North Home Street • Mishawaka, IN 46545-7267
Tel: 800.959.7841 574.259.7841 • Fax: 800.241.7664 • Email: sales@daman.com • www.daman.com

Daman S77 Servo Subplate

1.750 Port Circle

Side Ported Subplate

Valve mtg: UNC 0.31-18 x 0.88 DP or
Metric M8-1.25mm ISO 6H x [22.2] DP
Subplate hardware kit is supplied.
See page 154 for itemized list.

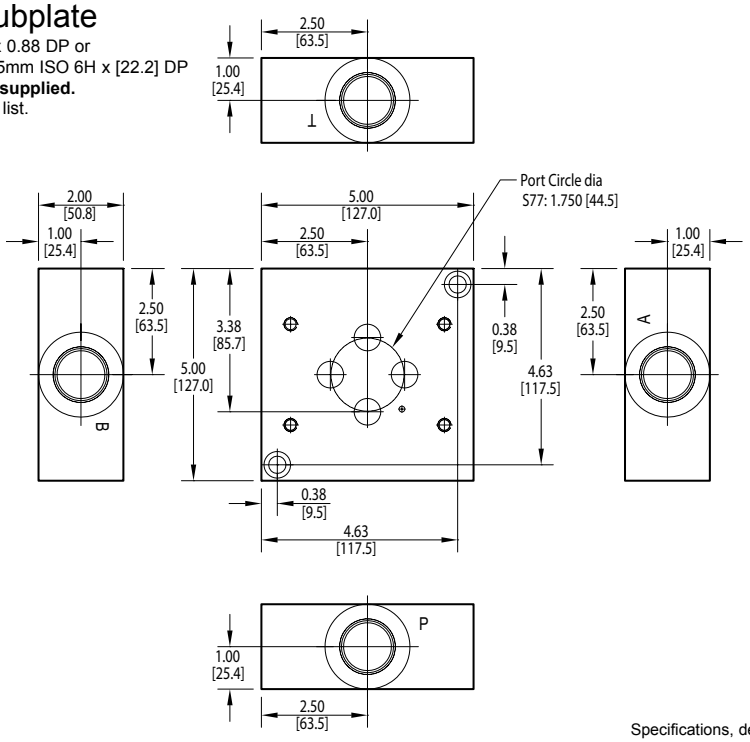

Specifications, descriptions, and dimensional data are subject to correction or change without notice or incurring obligation. Download latest catalog page revisions at www.daman.com.

Ordering Information

Material	Servo Valve Pattern	Product Type	Port Location	Port Threads

For **coating options** see pages 245-246.

Material

A	Aluminum - 6061-T6 3000† psi • 20.7 MPa
D	Ductile Iron - D4512 5000† psi • 34.5 MPa

† Working pressure should be considered in accordance with ISO 4413 to determine appropriate material type.

Product Type

SP	Subplate

Port Threads

16S	-16 SAE ISO 11926; SAE 1926
16M	M33 x 2.0 ISO 6149

Servo Pattern

S77	Daman S77 See page 140 and Tech Info

Port Location

S	Side ported

Daman Products Company, Inc. • 1811 North Home Street • Mishawaka, IN 46545-7267
Tel: 800.959.7841 574.259.7841 • Fax: 800.241.7664 • Email: sales@daman.com • www.daman.com

Daman S78 Servo Subplate

Side Ported Subplate

Valve mtg: UNC 0.63-11 x 1.44 DP or
Metric M16-2mm ISO 6H x [36.6] DP
Subplate hardware kit is supplied.
See page 154 for itemized list.

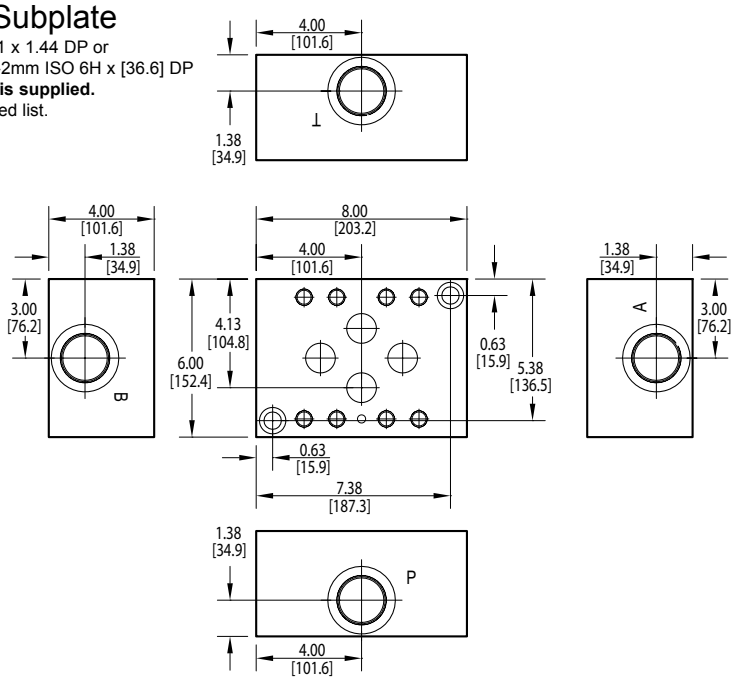

Specifications, descriptions, and dimensional data are subject to correction or change without notice or incurring obligation. Download latest catalog page revisions at www.daman.com.

Ordering Information

Material	Servo Valve Pattern	Product Type	Port Location	Port Threads

For **coating options** see pages 245-246.

Material

A	Aluminum - 6061-T6 3000† psi • 20.7 MPa
D	Ductile Iron - D4512 5000† psi • 34.5 MPa

† Working pressure should be considered in accordance with ISO 4413 to determine appropriate material type.

Product Type

SP	Subplate

Port Threads

24S	-24 SAE ISO 11926; SAE 1926
24M	M48 x 2.0 ISO 6149

Servo Pattern

S78	Daman S78 See page 140 and Tech Info

Port Location

S	Side ported

Daman Products Company, Inc. • 1811 North Home Street • Mishawaka, IN 46545-7267
Tel: 800.959.7841 574.259.7841 • Fax: 800.241.7664 • Email: sales@daman.com • www.daman.com

Daman S82, S87 Servo Subplates

S82 Side Ported Subplate

Valve mtg: Metric M4-0.7mm ISO 6H x 0.50 [12.7] DP
Subplate hardware kit is supplied.
See page 154 for itemized list.

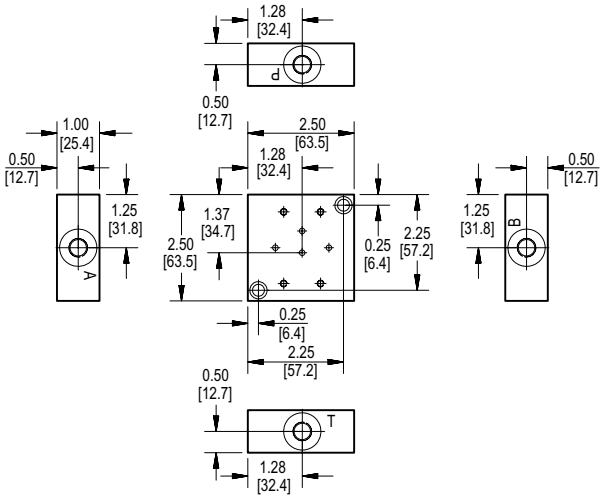

S87 Side Ported Subplate

Valve mtg: UNC 0.31-18 x 0.88 DP or
Metric M8-1.25mm ISO 6H x [22] DP
Subplate hardware kit is supplied.
See page 154 for itemized list.

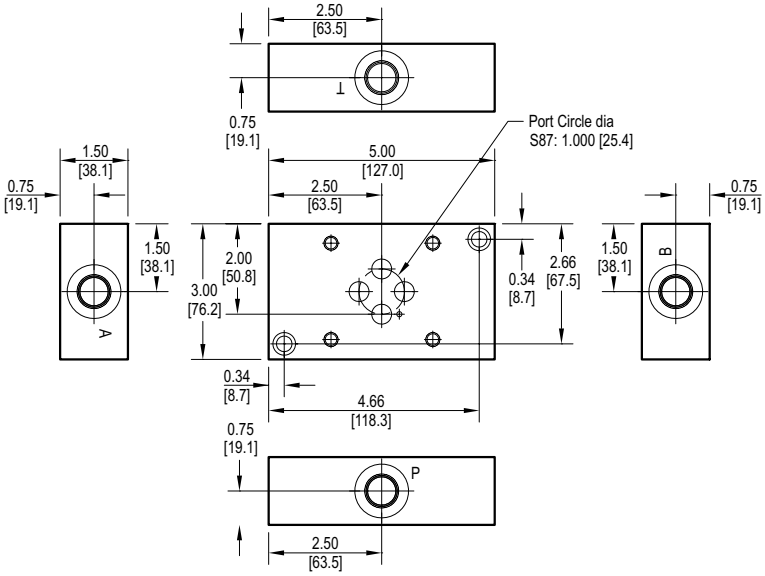

Specifications, descriptions, and dimensional data are subject to correction or change without notice or incurring obligation. Download latest catalog page revisions at www.daman.com.

Ordering Information

Material	Servo Valve Pattern	Product Type	Port Location	Port Threads

For **coating options** see pages 245-246.

Material

A	Aluminum - 6061-T6 3000† psi • 20.7 MPa
D	Ductile Iron - D4512 5000† psi • 34.5 MPa

† Working pressure should be considered in accordance with ISO 4413 to determine appropriate material type.

Product Type

SP	Subplate

Port Threads

S82 Subplate only	
4S	-4 SAE ISO 11926; SAE 1926
4M	M10 x 1.0 ISO 6149
S87 Subplate only	
8S	-8 SAE ISO 11926; SAE 1926
8M	M18 x 1.5 ISO 6149

Servo Pattern

S82	Daman S82 See page 140 and Tech Info
S87	Daman S87 See page 140 and Tech Info

Port Location

S	Side ported

Daman Products Company, Inc. • 1811 North Home Street • Mishawaka, IN 46545-7267
Tel: 800.959.7841 574.259.7841 • Fax: 800.241.7664 • Email: sales@daman.com • www.daman.com

Daman S90, S92 Servo Subplate

S90 Side Ported Subplate

Valve mtg: UNC #10-24 x 0.63 DP or
Metric M5-0.8mm ISO 6H x [16] DP
Subplate hardware kit is supplied.
See page 154 for itemized list.

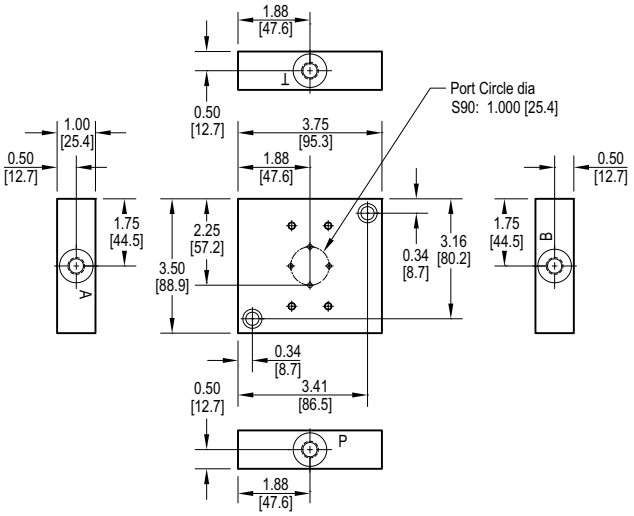

S92 Side Ported Subplate

Valve mtg: UNC #8-32 x 0.63 DP or
Metric M4-0.7mm ISO 6H x [16] DP
Subplate hardware kit is supplied.
See page 154 for itemized list.

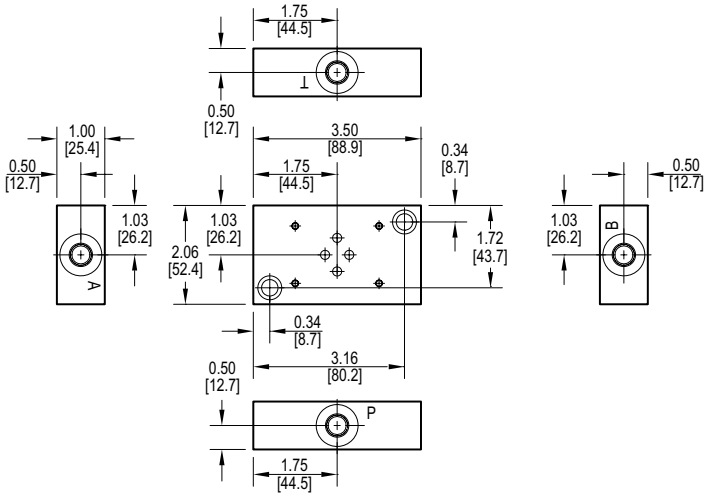

Specifications, descriptions, and dimensional data are subject to correction or change without notice or incurring obligation. Download latest catalog page revisions at www.daman.com.

Ordering Information

Material	Servo Valve Pattern	Product Type	Port Location	Port Threads

For **coating options** see pages 245-246.

Material

A	Aluminum - 6061-T6 3000† psi • 20.7 MPa
D	Ductile Iron - D4512 5000† psi • 34.5 MPa

† Working pressure should be considered in accordance with ISO 4413 to determine appropriate material type.

Product Type

SP	Subplate

Port Threads

4S	-4 SAE ISO 11926; SAE 1926
4M	M10 x 1.0 ISO 6149

Servo Pattern

S90	Daman S90 See page 140 and Tech Info
S92	Daman S92 See page 140 and Tech Info

Port Location

S	Side ported

Daman Products Company, Inc. • 1811 North Home Street • Mishawaka, IN 46545-7267
Tel: 800.959.7841 574.259.7841 • Fax: 800.241.7664 • Email: sales@daman.com • www.daman.com

D05 Servo Valve Tapping Plates

D05-S1, D05-S2, D05-S3 Pilot Port Tapping Plate

Subplate interface seal kit is supplied.
See page 154 for itemized list.

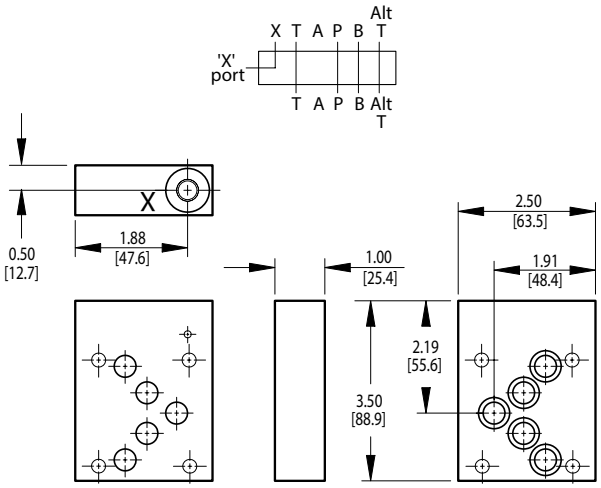

D05-S4 Pilot Port Tapping Plate

Subplate interface seal kit is supplied.
See page 154 for itemized list.

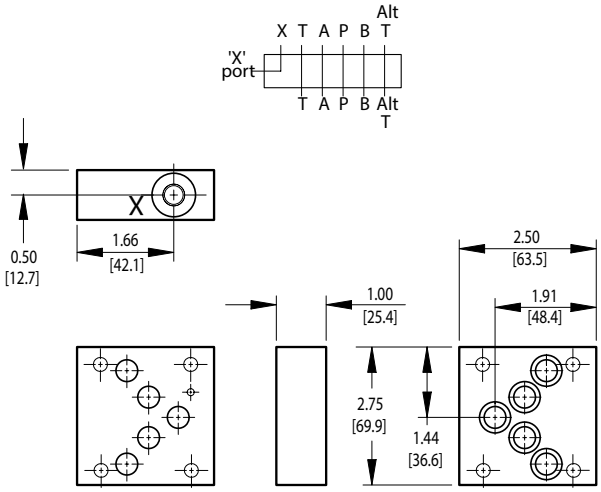

Note: These tapping plates are designed to be used with standard D05 manifolds or subplates. They provide an external pilot port for the servo valves referenced. If the servo valve uses an internal pilot, these tapping plates are not needed. The servo valve may be mounted directly to our D05 manifold or subplate.

Specifications, descriptions, and dimensional data are subject to correction or change without notice or incurring obligation. Download latest catalog page revisions at www.daman.com.

Ordering Information

Material	Servo Valve Pattern	Product Type	Port Location	Port Threads

For **coating options** see pages 245-246.

Material

A	Aluminum - 6061-T6 3000† psi • 20.7 MPa
D	Ductile Iron - D4512 5000† psi • 34.5 MPa

† Working pressure should be considered in accordance with ISO 4413 to determine appropriate material type.

Valve Pattern

D05	ISO 4401-05-04 NFPA T3.5.1-D05 See Tech Information

Product Type

TP	Tapping Plate

Circuit

XA	X port - For D05-S1, D05-S2, or D05-S3 Patterns
XB	X port - For D05-S4 Pattern

Port Threads

4S	-4 SAE ISO 11926; SAE 1926
4M	M10 x 1.0 ISO 6149

Daman Products Company, Inc. • 1811 North Home Street • Mishawaka, IN 46545-7267
Tel: 800.959.7841 574.259.7841 • Fax: 800.241.7664 • Email: sales@daman.com • www.daman.com

Daman®

Servo Valve Product Mounting Hardware

Part no.	Cat. pg.	Mounting Screws	Viton O-rings	Locating Pins	Plugs
* S01 SP S 4S * S01 SP S 4M	142	(2) UNC 0.25-20 x 0.88 long SHCS (2) ISO 6H M6-1.0 x 22mm SHCS	n/a	n/a	n/a
* S02 SP S 8S * S03 SP S 8S * S71 SP S 8S * S72 SP S 8S * S83 SP S 8S * S85 SP S 8S	143	(2) UNC 0.31-18 x 1.25 long SHCS	n/a	n/a	n/a
* S02 SP S 8M * S03 SP S 8M * S71 SP S 8M * S72 SP S 8M * S83 SP S 8M * S85 SP S 8M	143	(2) ISO 6H M8-1.25 x 35mm SHCS	n/a	n/a	n/a
* S02 TP X 4* * S71 TP X 4*	143	n/a	(4) -010 (4) -011	(1) 0.09 dia x 0.25 long	n/a
* S04 SP S 12S * S04 SP S 12M	144	(2) UNC 0.31-18 x 2.00 long SHCS (2) ISO 6H M8-1.25 x 50mm SHCS	n/a	n/a	n/a
* S04 TP X 4S	144	n/a	(4) -013	(1) 0.12 dia x 0.25 long	(1) -4 SAE hex socket plug
* S04 TP X 4M	144	n/a	(4) -013	(1) 0.12 dia x 0.25 long	n/a
* S06 SP S 20S * S06 SP S 20M	145	(2) UNC 0.38-16 x 2.50 long SHCS (2) ISO 6H M10-1.5 x 65mm SHCS	n/a	n/a	n/a
* S06 TP X 4*	145	n/a	(4) -020	(1) 0.25 dia x 0.38 long	n/a
* S73 SP S 8S * S73 SP S 8M	146	(2) UNC 0.31-18 x 1.25 long SHCS (2) ISO 6H M8-1.25 x 35mm SHCS	n/a	n/a	n/a
* S74 SP S 16S * S74 SP S 16M	147	(2) UNC 0.38-16 x 3.00 long SHCS (2) ISO 6H M10-1.5 x 75mm SHCS	n/a	n/a	n/a
* S76 SP S 8S * S76 SP S 8M	148	(2) UNC 0.31-18 x 1.25 long SHCS (2) ISO 6H M8-1.25 x 35mm SHCS	n/a	n/a	n/a
* S77 SP S 16S * S77 SP S 16M	149	(2) UNC 0.38-16 x 2.00 long SHCS (2) ISO 6H M10-1.5 x 50mm SHCS	n/a	n/a	n/a
* S78 SP S 24S * S78 SP S 24M	150	(2) UNC 0.62-11 x 4.00 long SHCS (2) ISO 6H M16-2.0 x 100mm SHCS	n/a	n/a	n/a
* S82 SP S 4S * S82 SP S 4M	151	(2) UNC 0.25-20 x 1.00 long SHCS (2) ISO 6H M6-1.0 x 25mm SHCS	n/a	n/a	n/a
* S87 SP S 8S * S87 SP S 8M	151	(2) UNC 0.31-18 x 1.50 long SHCS (2) ISO 6H M8-1.25 x 40mm SHCS	n/a	n/a	n/a
* S90 SP S 4S * S90 SP S 4M	152	(2) UNC 0.31-18 x 1.25 long SHCS (2) ISO 6H M8-1.25 x 35mm SHCS	n/a	n/a	n/a
* S92 SP S 4S * S92 SP S 4M	152	(2) UNC 0.31-18 x 1.25 long SHCS (2) ISO 6H M8-1.25 x 35mm SHCS	n/a	n/a	n/a
* D05 TP XA 4* * D05 TP XB 4*	153	n/a	(5) -014	n/a	n/a

Daman Products Company, Inc. • 1811 North Home Street • Mishawaka, IN 46545-7267
Tel: 800.959.7841 574.259.7841 • Fax: 800.241.7664 • Email: sales@daman.com • www.daman.com

TAPPING PLATES

D03 Tapping Plates	Pages 158-160
D05 Tapping Plates	Pages 161-163
D05 Tapping Plates with Pilot Ports	Pages 164-168
D07 Tapping Plates	Pages 169-172
D08 Tapping Plates	Pages 173-176
D10 Tapping Plates	Page 177
Flange Mount Bodies	Pages 178-179
Mounting Hardware	Page 180

Daman®

Tapping Plates

The pages in this section are our standard product offerings for tapping plates. If you need a custom tapping plate solution please visit **www.daman.com** for Request For Quote (RFQ) instructions.

Daman Products Company, Inc. • 1811 North Home Street • Mishawaka, IN 46545-7267
Tel: 800.959.7841 574.259.7841 • Fax: 800.241.7664 • Email: sales@daman.com • www.daman.com

D03 Tapping Plates

P and T Port Tapping Plate

Tapping Plate hardware / interface seal kit is supplied. See page 180 for itemized list.

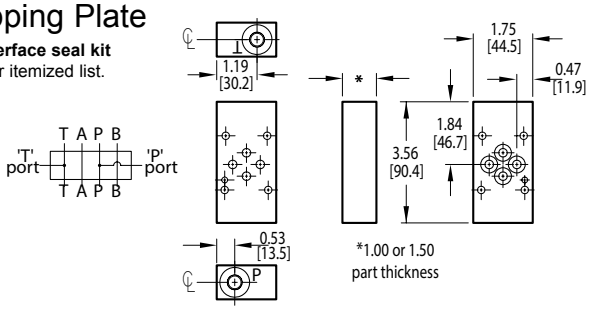

A and B Port Tapping Plate

Tapping Plate hardware / interface seal kit is supplied. See page 180 for itemized list.

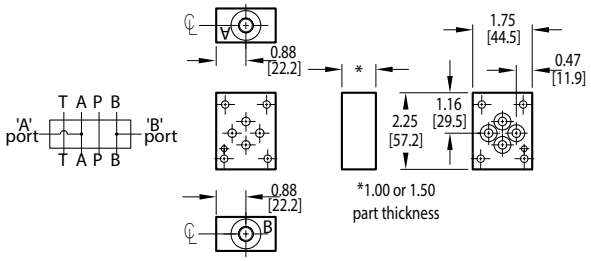

L Port Tapping Plate

Tapping Plate hardware / interface seal kit is supplied. See page 180 for itemized list.

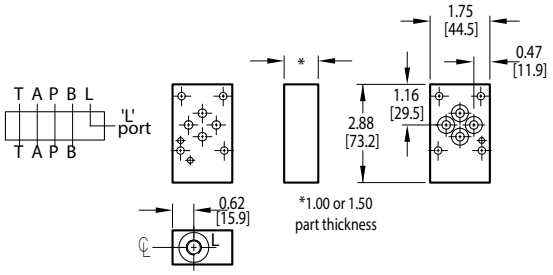

Specifications, descriptions, and dimensional data are subject to correction or change without notice or incurring obligation. Download latest catalog page revisions at www.daman.com.

Ordering Information

For **coating options** see pages 245-246.

Material	Valve Pattern	Product Type	Circuit	Port Threads	Thickness

Material

A	Aluminum - 6061-T6 3000† psi • 20.7 MPa
D	Ductile Iron - D4512 5000† psi • 34.5 MPa

† Working pressure should be considered in accordance with ISO 4413 to determine appropriate material type.

Product Type

TP	Tapping Plate

Valve Pattern

D03	ISO 4401-03-02 NFPA T3.5.1-D03 See Tech Infomation

Circuit

PT	P and T ports provided
AB	A and B ports provided
L	L port provided

Port Threads

4P	0.25-18 NPTF ANSI B1.20.3
4S	-4 SAE ISO 11926; SAE 1926
4B	0.25-19 BSPP ISO 1179; BS 2779
4M	M10 x 1.0 ISO 6149
4T	0.25-19 BSPT ISO 7; BS 21

Thickness

150	For 1.5" thickness
OMIT for standard 1" thickness	

Daman Products Company, Inc. • 1811 North Home Street • Mishawaka, IN 46545-7267
Tel: 800.959.7841 574.259.7841 • Fax: 800.241.7664 • Email: sales@daman.com • www.daman.com

D03 Tapping Plates

Orifice Tapping Plate

Tapping Plate hardware / interface seal kit is supplied. See page 180 for itemized list.

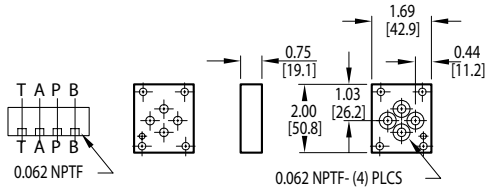

Spot Drilled Tapping Plate

Tapping Plate hardware / interface seal kit is supplied. See page 180 for itemized list.

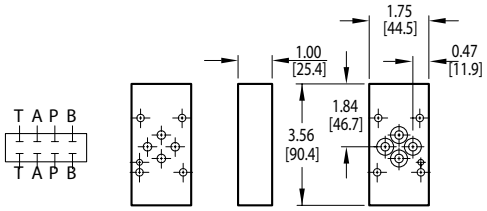

B to T vent Tapping Plate

Tapping Plate hardware / interface seal kit is supplied. See page 180 for itemized list.

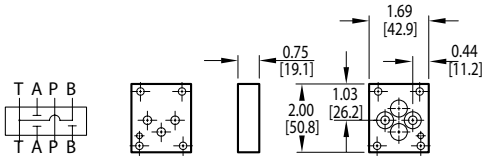

Specifications, descriptions, and dimensional data are subject to correction or change without notice or incurring obligation. Download latest catalog page revisions at www.daman.com.

Ordering Information

Material	Valve Pattern	Product Type	Circuit

For **coating options** see pages 245-246.

Material

A	Aluminum - 6061-T6 3000† psi • 20.7 MPa
D	Ductile Iron - D4512 5000† psi • 34.5 MPa

† Working pressure should be considered in accordance with ISO 4413 to determine appropriate material type.

Product Type

TP	Tapping Plate

Valve Pattern

D03	ISO 4401-03-02 NFPA T3.5.1-D03 See Tech Infomation

Circuit

SD	Spot drilled ports
OP	Orifice plate
BTV	B to T vent plate

Daman Products Company, Inc. • 1811 North Home Street • Mishawaka, IN 46545-7267
Tel: 800.959.7841 574.259.7841 • Fax: 800.241.7664 • Email: sales@daman.com • www.daman.com

D03 Tapping Plates

D03 Two Station Tapping Plate

A_1 common to A_2, B_1 common to B_2

Tapping Plate hardware / interface seal kit is supplied. See page 180 for itemized list.

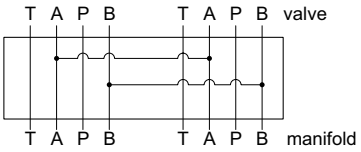

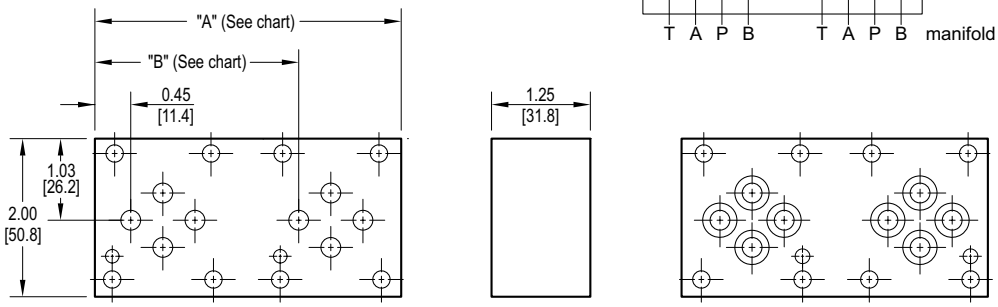

Dimension	A	B
*D03TP022AB	3.88 [98.6]	2.58 [65.5]
*D03TP024AB	5.75 [146.1]	4.45 [113.1]
L*D03TP022AB	3.75 [95.3]	2.45 [62.3]

There are two different tapping plate models with spacing code 2 available. This is necessary to cover the variation of valve spacing between the standard design and the FlexMount design of D03 manifolds. The standard manifold design has 2.125" valve spacing while the FlexMount design has 2.000" valve spacing. An L is added to the front of the model number to denote the tapping plate designed to be used with the FlexMount manifold. Note that a single model is required with spacing code 4 as both the standard and FlexMount designs have 4.000 spacing.

Specifications, descriptions, and dimensional data are subject to correction or change without notice or incurring obligation. Download latest catalog page revisions at www.daman.com.

Ordering Information

For **coating options** see pages 245-246.

Product Line	Material	Valve Pattern	Product Type	No. of Stations	Valve Spacing	Circuit

Product Line

Omit	For use with standard design D03 manifold.
L	For use with FlexMount D03 manifold. Spacing code 2 only.

Material

A	Aluminum - 6061-T6 3000† psi • 20.7 MPa
D	Ductile Iron - D4512 5000† psi • 34.5 MPa

† Working pressure should be considered in accordance with ISO 4413 to determine appropriate material type.

Valve Pattern

D03	ISO 4401-03-02 NFPA T3.5.1-D03 See Tech Infomation

Product Type

TP	Tapping Plate

No. of Stations

02	02 Stations

Valve Spacing

2	L*D03TP022AB = 2.00 inch (50.8 mm) *D03TP022AB = 2.13 inch (54.0 mm)
4	4.00 inch (101.6 mm) Not available with L.

Circuit

AB	A1 common to A2 B1 common to B2

Daman Products Company, Inc. • 1811 North Home Street • Mishawaka, IN 46545-7267
Tel: 800.959.7841 574.259.7841 • Fax: 800.241.7664 • Email: sales@daman.com • www.daman.com

Daman®

D05 Tapping Plates

P and T Port Tapping Plate

Tapping Plate hardware / interface seal kit is supplied. See page 180 for itemized list.

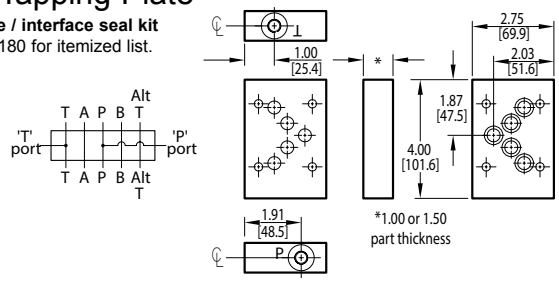

A and B Port Tapping Plate

Tapping Plate hardware / interface seal kit is supplied. See page 180 for itemized list.

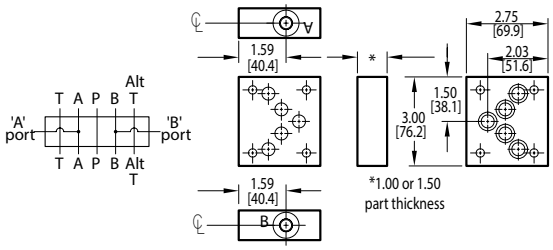

L Port Tapping Plate

Tapping Plate interface seal kit is supplied. See page 180 for itemized list.

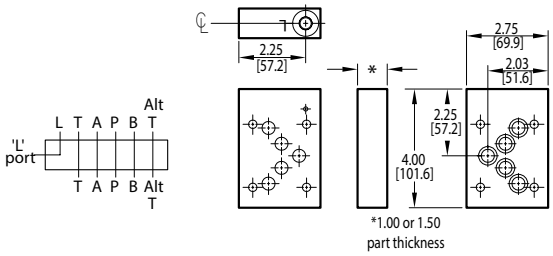

Specifications, descriptions, and dimensional data are subject to correction or change without notice or incurring obligation. Download latest catalog page revisions at www.daman.com.

Ordering Information

For **coating options** see pages 245-246.

Material	Valve Pattern	Product Type	Circuit	Port Threads	Thickness

Material

A	Aluminum - 6061-T6 3000† psi • 20.7 MPa
D	Ductile Iron - D4512 5000† psi • 34.5 MPa

† Working pressure should be considered in accordance with ISO 4413 to determine appropriate material type.

Valve Pattern

D05	ISO 4401-05-04 NFPA T3.5.1-D05 See Tech Infomation

Product Type

TP	Tapping Plate

Circuit

PT	P and T ports provided
AB	A and B ports provided
L	L port provided

Port Threads

4P	0.25-18 NPTF ANSI B1.20.3
4S	-4 SAE ISO 11926; SAE 1926
4B	0.25-19 BSPP ISO 1179; BS 2779
4M	M10 x 1.0 ISO 6149
4T	0.25-19 BSPT ISO 7; BS 21

Thickness

150	For 1.5" thickness
OMIT for standard 1" thickness	

Daman Products Company, Inc. • 1811 North Home Street • Mishawaka, IN 46545-7267
Tel: 800.959.7841 574.259.7841 • Fax: 800.241.7664 • Email: sales@daman.com • www.daman.com

D05 Tapping Plates

Spot Drilled Tapping Plate

Tapping Plate interface seal kit is supplied.
See page 180 for itemized list.

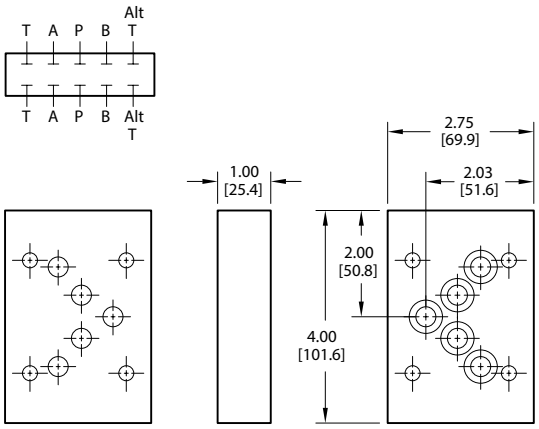

B to T vent Tapping Plate

Tapping Plate interface seal kit is supplied.
See page 180 for itemized list.

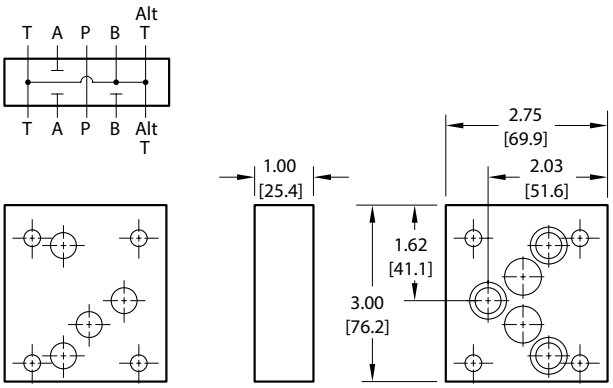

Specifications, descriptions, and dimensional data are subject to correction or change without notice or incurring obligation. Download latest catalog page revisions at www.daman.com.

Ordering Information

Material	Valve Pattern	Product Type	Circuit

For **coating options** see pages 245-246.

Material

A	Aluminum - 6061-T6 3000† psi • 20.7 MPa
D	Ductile Iron - D4512 5000† psi • 34.5 MPa

† Working pressure should be considered in accordance with ISO 4413 to determine appropriate material type.

Product Type

TP	Tapping Plate

Valve Pattern

D05	ISO 4401-05-04 NFPA T3.5.1-D05 See Tech Infomation

Circuit

SD	Spot drilled ports
BTV	B to T vent plate

Daman Products Company, Inc. • 1811 North Home Street • Mishawaka, IN 46545-7267
Tel: 800.959.7841 574.259.7841 • Fax: 800.241.7664 • Email: sales@daman.com • www.daman.com

D05 Tapping Plates

D05 Two Station Tapping Plate

A_1 common to A_2, B_1 common to B_2

Tapping Plate interface seal kit is supplied.
See page 180 for itemized list.

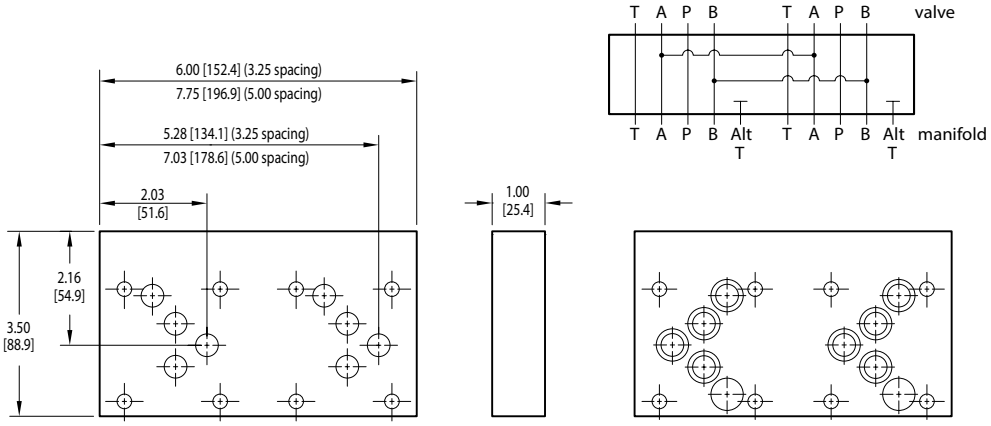

Specifications, descriptions, and dimensional data are subject to correction or change without notice or incurring obligation. Download latest catalog page revisions at www.daman.com.

Ordering Information

For **coating options** see pages 245-246.

Material	Valve Pattern	Product Type	No. of Stations	Valve Spacing	Circuit

Material

A	Aluminum - 6061-T6 3000† psi • 20.7 MPa
D	Ductile Iron - D4512 5000† psi • 34.5 MPa

† Working pressure should be considered in accordance with ISO 4413 to determine appropriate material type.

Valve Pattern

D05	ISO 4401-05-04 NFPA T3.5.1-D05 See Tech Infomation

Product Type

TP	Tapping Plate

No. of Stations

02	02 Stations

Valve Spacing

3	3.25 inch 82.6 mm
5	5.00 inch 127.0 mm

Circuit

AB	A1 common to A2 B1 common to B2

Daman Products Company, Inc. • 1811 North Home Street • Mishawaka, IN 46545-7267
Tel: 800.959.7841 574.259.7841 • Fax: 800.241.7664 • Email: sales@daman.com • www.daman.com

D05 Tapping Plates with USA Pilot Ports

P and T Port Tapping Plate

Tapping Plate hardware / interface seal kit is supplied. See page 180 for itemized list.

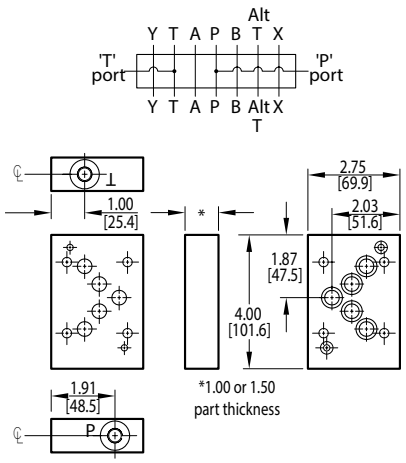

A and B Port Tapping Plate

Tapping Plate hardware / interface seal kit is supplied. See page 180 for itemized list.

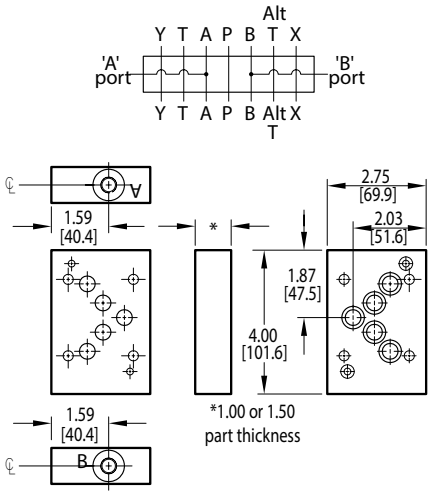

Specifications, descriptions, and dimensional data are subject to correction or change without notice or incurring obligation. Download latest catalog page revisions at www.daman.com.

Ordering Information

For **coating options** see pages 245-246.

Material	Valve Pattern	Product Type	Circuit	Port Threads	Thickness

Material

A	Aluminum - 6061-T6 3000† psi • 20.7 MPa
D	Ductile Iron - D4512 5000† psi • 34.5 MPa

† Working pressure should be considered in accordance with ISO 4413 to determine appropriate material type.

Product Type

TP	Tapping Plate

Valve Pattern

D05H	(USA std) NFPA T3.5.1-D05 Alt B See Tech Infomation

Circuit

PT	P and T ports provided
AB	A and B ports provided

Port Threads

4P	0.25-18 NPTF ANSI B1.20.3
4S	-4 SAE ISO 11926; SAE 1926
4B	0.25-19 BSPP ISO 1179; BS 2779
4M	M10 x 1.0 ISO 6149
4T	0.25-19 BSPT ISO 7; BS 21

Thickness

150	For 1.5" thickness
OMIT for standard 1" thickness	

Daman Products Company, Inc. • 1811 North Home Street • Mishawaka, IN 46545-7267
Tel: 800.959.7841 574.259.7841 • Fax: 800.241.7664 • Email: sales@daman.com • www.daman.com

D05 Tapping Plates with ISO Pilot Ports

P and T Port Tapping Plate

Tapping Plate hardware / interface seal kit is supplied. See page 180 for itemized list.

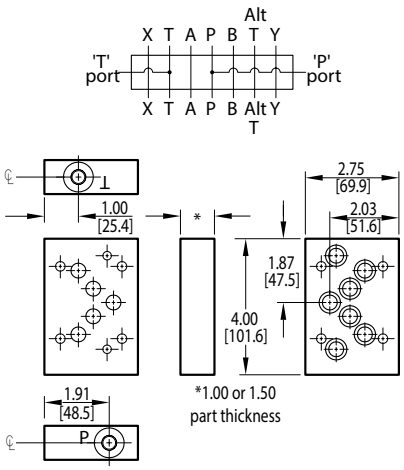

A and B Port Tapping Plate

Tapping Plate hardware / interface seal kit is supplied. See page 180 for itemized list.

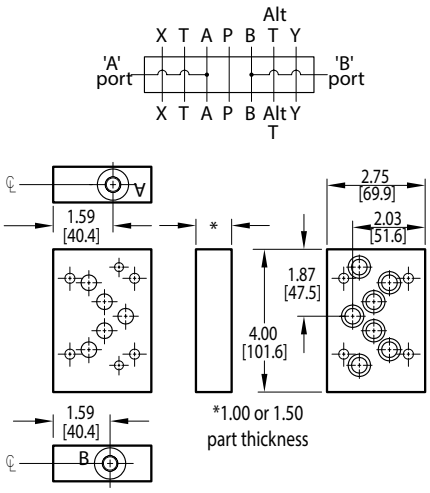

Specifications, descriptions, and dimensional data are subject to correction or change without notice or incurring obligation. Download latest catalog page revisions at www.daman.com.

Ordering Information

For **coating options** see pages 245-246.

Material	Valve Pattern	Product Type	Circuit	Port Threads	Thickness

Material

A	Aluminum - 6061-T6 3000† psi • 20.7 MPa
D	Ductile Iron - D4512 5000† psi • 34.5 MPa

† Working pressure should be considered in accordance with ISO 4413 to determine appropriate material type.

Valve Pattern

D05HE	ISO 4401-05-05 NFPA T3.5.1-D05 Alt A See Tech Infomation

Product Type

TP	Tapping Plate

Circuit

PT	P and T ports provided
AB	A and B ports provided

Port Threads

4P	0.25-18 NPTF ANSI B1.20.3
4S	-4 SAE ISO 11926; SAE 1926
4B	0.25-19 BSPP ISO 1179; BS 2779
4M	M10 x 1.0 ISO 6149
4T	0.25-19 BSPT ISO 7; BS 21

Thickness

150	For 1.5" thickness
	OMIT for standard 1" thickness

Daman Products Company, Inc. • 1811 North Home Street • Mishawaka, IN 46545-7267
Tel: 800.959.7841 574.259.7841 • Fax: 800.241.7664 • Email: sales@daman.com • www.daman.com

D05 Tapping Plates with Pilot Ports

X and Y Port Tapping Plate

Tapping Plate hardware / interface seal kit is supplied. See page 180 for itemized list.

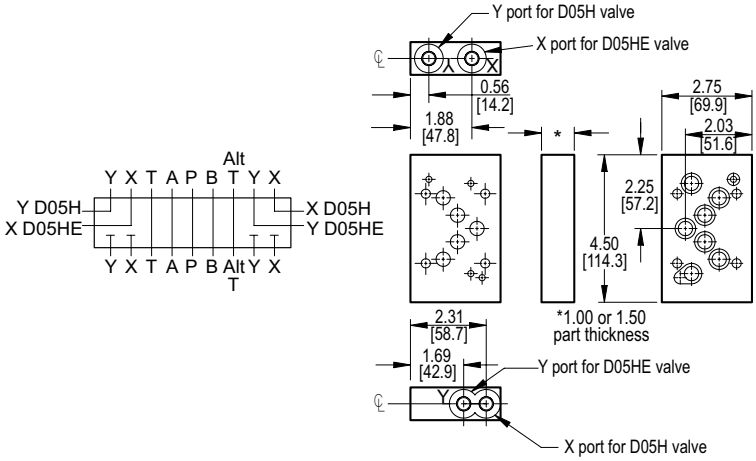

Specifications, descriptions, and dimensional data are subject to correction or change without notice or incurring obligation. Download latest catalog page revisions at www.daman.com.

Ordering Information

For **coating options** see pages 245-246.

Material	Valve Pattern	Product Type	Circuit	Port Threads	Thickness

Material

A	Aluminum - 6061-T6 3000† psi • 20.7 MPa
D	Ductile Iron - D4512 5000† psi • 34.5 MPa

† Working pressure should be considered in accordance with ISO 4413 to determine appropriate material type.

Product Type

TP	Tapping Plate

Port Threads

4P	0.25-18 NPTF ANSI B1.20.3
4S	-4 SAE ISO 11926; SAE 1926
4B	0.25-19 BSPP ISO 1179; BS 2779
4M	M10 x 1.0 ISO 6149
4T	0.25-19 BSPT ISO 7; BS 21

Thickness

150	For 1.5" thickness
OMIT for standard 1" thickness	

Valve Pattern

D05H	ISO 4401-05-05 NFPA T3.5.1-D05 Alt A & B See Technical Infomation

Circuit

XY	X and Y ports provided

Daman Products Company, Inc. • 1811 North Home Street • Mishawaka, IN 46545-7267
Tel: 800.959.7841 574.259.7841 • Fax: 800.241.7664 • Email: sales@daman.com • www.daman.com

D05 Tapping Plates with Pilot Ports

Spot Drilled Tapping Plate

Tapping Plate interface seal kit is supplied.
See page 180 for itemized list.

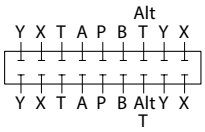

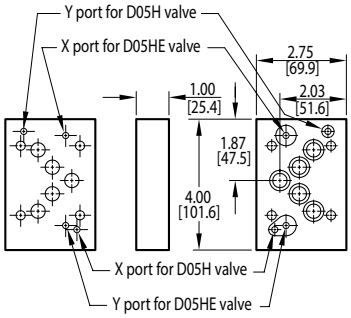

Specifications, descriptions, and dimensional data are subject to correction or change without notice or incurring obligation.
Download latest catalog page revisions at www.daman.com.

Ordering Information

Material	Valve Pattern	Product Type	Circuit

For **coating options** see pages 245-246.

Material

A	Aluminum - 6061-T6 3000† psi • 20.7 MPa
D	Ductile Iron - D4512 5000† psi • 34.5 MPa

† Working pressure should be considered in accordance with ISO 4413 to determine appropriate material type.

Product Type

TP	Tapping Plate

Valve Pattern

D05H	ISO 4401-05-05 NFPA T3.5.1-D05 Alt A & B See Technical Infomation

Circuit

SD	Spot drilled ports

Daman Products Company, Inc. • 1811 North Home Street • Mishawaka, IN 46545-7267
Tel: 800.959.7841 574.259.7841 • Fax: 800.241.7664 • Email: sales@daman.com • www.daman.com

D05 Tapping Plates with Pilot Ports

D05(H) Two Station Tapping Plate (USA Pilot Ports) A_1 common to A_2, B_1 common to B_2

Tapping Plate interface seal kit is supplied.
See page 180 for itemized list.

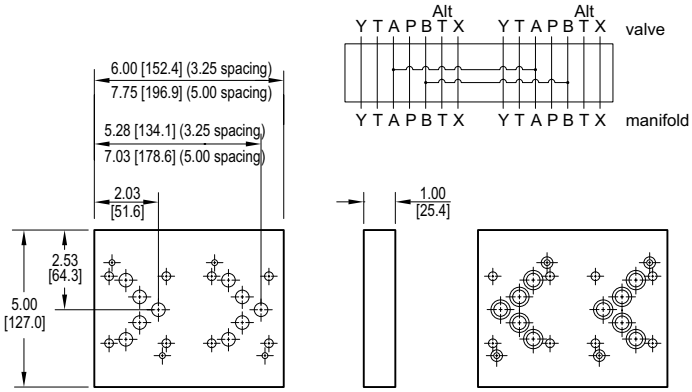

D05(HE) Two Station Tapping Plate (ISO Pilot Ports) A_1 common to A_2, B_1 common to B_2

Tapping Plate interface seal kit is supplied.
See page 180 for itemized list.

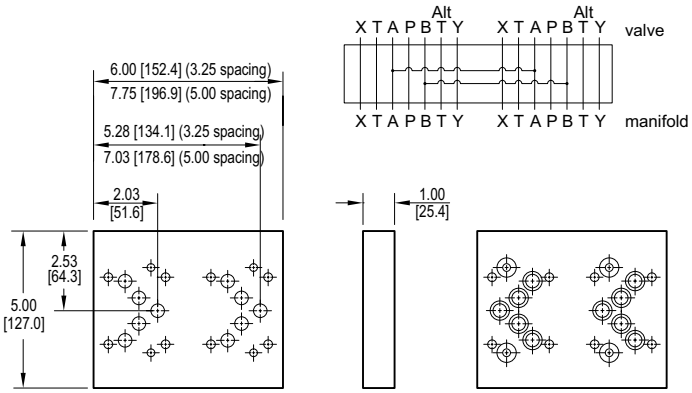

Specifications, descriptions, and dimensional data are subject to correction or change without notice or incurring obligation.
Download latest catalog page revisions at www.daman.com.

Ordering Information

For **coating options** see pages 245-246.

Material	Valve Pattern	Product Type	No. of Stations	Valve Spacing	Circuit

Material

A	Aluminum - 6061-T6 3000† psi • 20.7 MPa
D	Ductile Iron - D4512 5000† psi • 34.5 MPa

† Working pressure should be considered in accordance with ISO 4413 to determine appropriate material type.

Product Type

TP	Tapping Plate

Valve Spacing

3	3.25 inch 82.6 mm
5	5.00 inch 127.0 mm

Valve Pattern

D05H	(USA std) NFPA T3.5.1-D05 Alt B See Tech Information
D05HE	ISO 4401-05-05 NFPA T3.5.1-D05 Alt A See Tech Information

No. of Stations

02	02 Stations

Circuit

AB	A1 common to A2 B1 common to B2

Daman Products Company, Inc. • 1811 North Home Street • Mishawaka, IN 46545-7267
Tel: 800.959.7841 574.259.7841 • Fax: 800.241.7664 • Email: sales@daman.com • www.daman.com

D07 Tapping Plates

P and T Port Tapping Plate

Tapping Plate hardware / interface seal kit is supplied. See page 180 for itemized list.

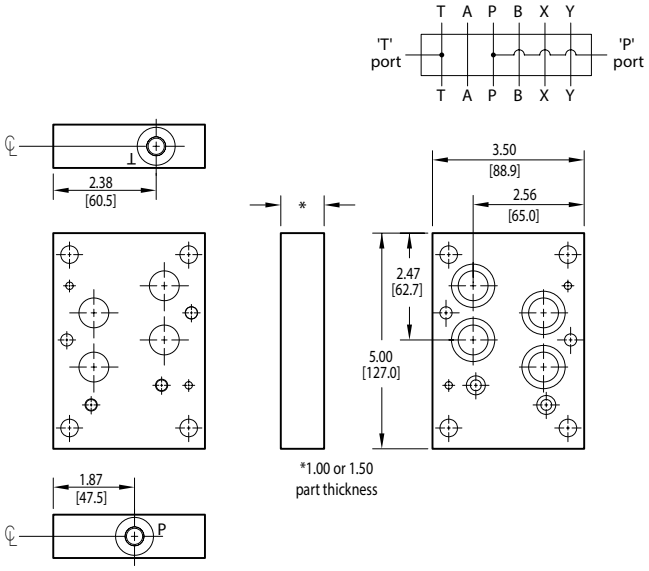

A and B Port Tapping Plate

Tapping Plate hardware / interface seal kit is supplied. See page 180 for itemized list.

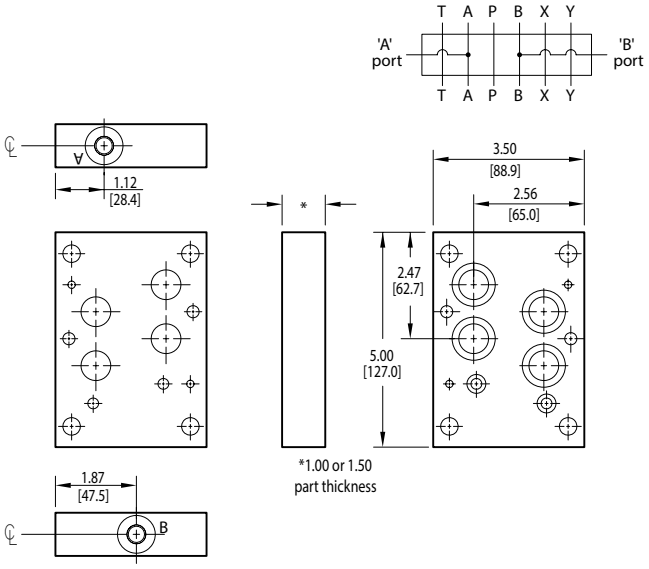

Specifications, descriptions, and dimensional data are subject to correction or change without notice or incurring obligation. Download latest catalog page revisions at www.daman.com.

Ordering Information

For **coating options** see pages 245-246.

Material	Valve Pattern	Product Type	Circuit	Port Threads	Thickness

Material

A	Aluminum - 6061-T6 3000† psi • 20.7 MPa
D	Ductile Iron - D4512 5000† psi • 34.5 MPa

† Working pressure should be considered in accordance with ISO 4413 to determine appropriate material type.

Valve Pattern

D07	ISO 4401-07-06 NFPA T3.5.1-D07 See Tech Infomation

Product Type

TP	Tapping Plate

Circuit

PT	P and T ports provided
AB	A and B ports provided

Port Threads

4P	0.25-18 NPTF ANSI B1.20.3
4S	-4 SAE ISO 11926; SAE 1926
4B	0.25-19 BSPP ISO 1179; BS 2779
4M	M10 x 1.0 ISO 6149
4T	0.25-19 BSPT ISO 7; BS 21

Thickness

150	For 1.5" thickness
OMIT for standard 1" thickness	

Daman Products Company, Inc. • 1811 North Home Street • Mishawaka, IN 46545-7267
Tel: 800.959.7841 574.259.7841 • Fax: 800.241.7664 • Email: sales@daman.com • www.daman.com

D07 Tapping Plates

X and Y Port Tapping Plate

Tapping Plate hardware / interface seal kit is supplied. See page 180 for itemized list.

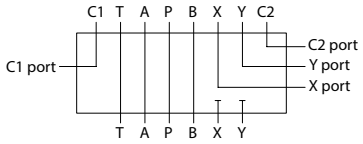

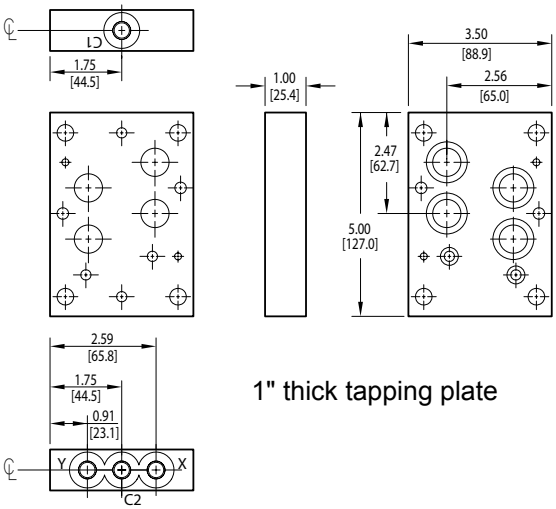

1" thick tapping plate

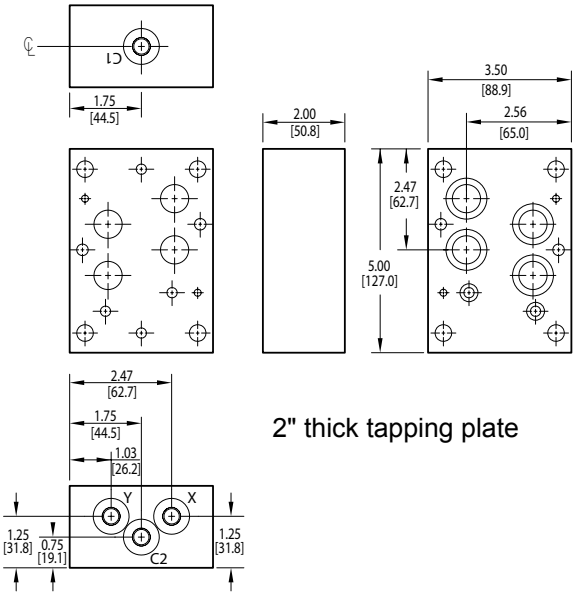

2" thick tapping plate

Specifications, descriptions, and dimensional data are subject to correction or change without notice or incurring obligation. Download latest catalog page revisions at www.daman.com.

Ordering Information

For **coating options** see pages 245-246.

Material	Valve Pattern	Product Type	Circuit	Port Threads	Thickness

Material

A	Aluminum - 6061-T6 3000† psi • 20.7 MPa
D	Ductile Iron - D4512 5000† psi • 34.5 MPa

† Working pressure should be considered in accordance with ISO 4413 to determine appropriate material type.

Valve Pattern

D07	ISO 4401-07-06 NFPA T3.5.1-D07 See Tech Infomation

Product Type

TP	Tapping Plate

Circuit

XY	X and Y ports provided

Port Threads

4P	0.25-18 NPTF ANSI B1.20.3
4S	-4 SAE ISO 11926; SAE 1926
4B	0.25-19 BSPP ISO 1179; BS 2779
4M	M10 x 1.0 ISO 6149
4T	0.25-19 BSPT ISO 7; BS 21

Thickness

200	For 2" thickness
OMIT for standard 1" thickness	

Daman Products Company, Inc. • 1811 North Home Street • Mishawaka, IN 46545-7267
Tel: 800.959.7841 574.259.7841 • Fax: 800.241.7664 • Email: sales@daman.com • www.daman.com

D07 Tapping Plates

Spot Drilled Tapping Plate

Tapping Plate hardware / interface seal kit is supplied. See page 180 for itemized list.

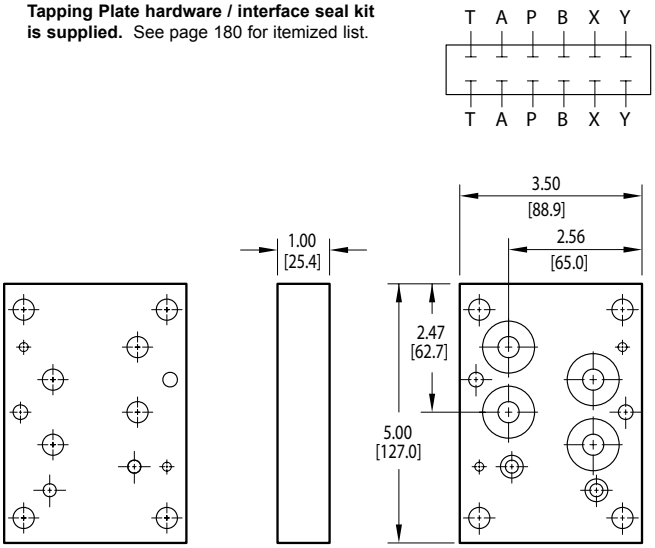

Specifications, descriptions, and dimensional data are subject to correction or change without notice or incurring obligation. Download latest catalog page revisions at www.daman.com.

Ordering Information

Material	Valve Pattern	Product Type	Circuit

For **coating options** see pages 245-246.

Material

A	Aluminum - 6061-T6 3000† psi • 20.7 MPa
D	Ductile Iron - D4512 5000† psi • 34.5 MPa

† Working pressure should be considered in accordance with ISO 4413 to determine appropriate material type.

Product Type

TP	Tapping Plate

Valve Pattern

D07	ISO 4401-07-06 NFPA T3.5.1-D07 See Tech Infomation

Circuit

SD	Spot drilled ports

Daman Products Company, Inc. • 1811 North Home Street • Mishawaka, IN 46545-7267
Tel: 800.959.7841 574.259.7841 • Fax: 800.241.7664 • Email: sales@daman.com • www.daman.com

D07 Tapping Plates

D05-D07 Two Station Tapping Plate

A_1 common to A_2, B_1 common to B_2

D05 Valve mtg: UNC 0.25-20 x 0.75 [19] DP
Tapping Plate hardware / interface seal kit is supplied. * See page 180 for itemized list.
* (6) bolts are user supplied and must pass through valve and tapping plate to thread into manifold.

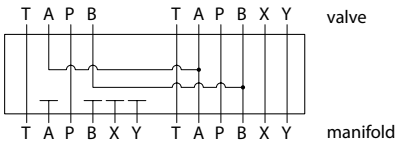

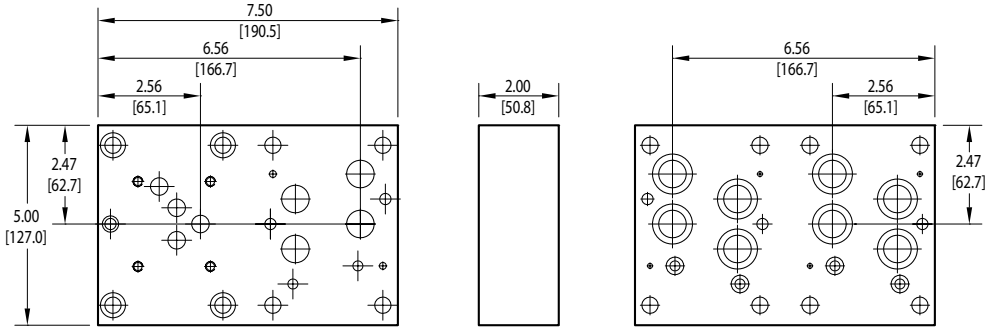

Specifications, descriptions, and dimensional data are subject to correction or change without notice or incurring obligation. Download latest catalog page revisions at www.daman.com.

Ordering Information

For **coating options** see pages 245-246.

Material	Valve Pattern Station 1	Valve Pattern Station 2	Product Type	No. of Stations	Valve Spacing	Circuit

Material

A	Aluminum - 6061-T6 3000† psi • 20.7 MPa
D	Ductile Iron - D4512 5000† psi • 34.5 MPa

† Working pressure should be considered in accordance with ISO 4413 to determine appropriate material type.

Valve Station 1

D05	ISO 4401-05-04 NFPA T3.5.1-D05 See Tech Infomation

Valve Station 2

D07	ISO 4401-07-06 NFPA T3.5.1-D07 See Tech Infomation

Product Type

TP	Tapping Plate

No. of Stations

02	02 Stations

Valve Spacing

4	4.00 inch 101.6 mm

Circuit

AB	A1 common to A2 B1 common to B2

Daman Products Company, Inc. • 1811 North Home Street • Mishawaka, IN 46545-7267
Tel: 800.959.7841 574.259.7841 • Fax: 800.241.7664 • Email: sales@daman.com • www.daman.com

D08 Tapping Plates

P and T Port Tapping Plate

Tapping Plate hardware / interface seal kit is supplied. See page 180 for itemized list.

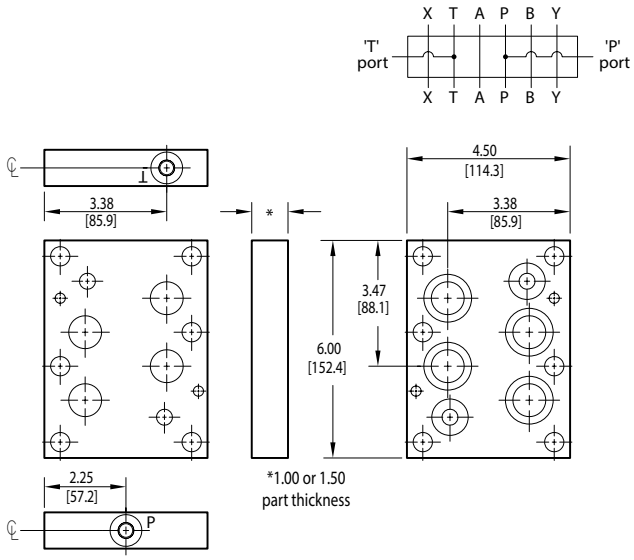

A and B Port Tapping Plate

Tapping Plate hardware / interface seal kit is supplied. See page 180 for itemized list.

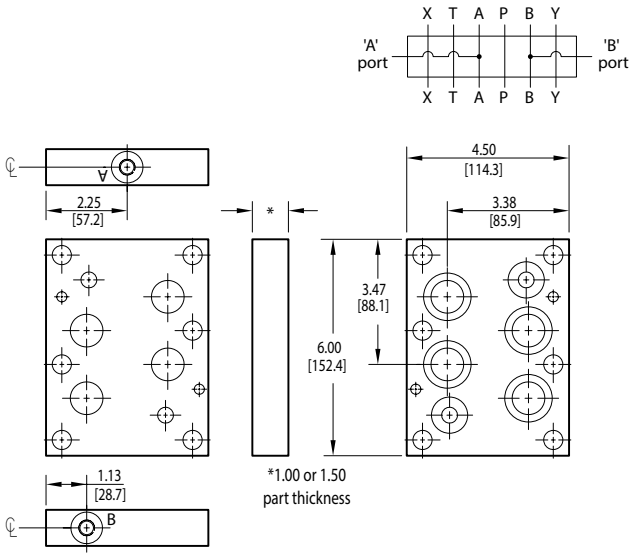

Specifications, descriptions, and dimensional data are subject to correction or change without notice or incurring obligation. Download latest catalog page revisions at www.daman.com.

Ordering Information

For **coating options** see pages 245-246.

Material	Valve Pattern	Product Type	Circuit	Port Threads	Thickness

Material

A	Aluminum - 6061-T6 3000† psi • 20.7 MPa
D	Ductile Iron - D4512 5000† psi • 34.5 MPa

† Working pressure should be considered in accordance with ISO 4413 to determine appropriate material type.

Valve Pattern

D08	ISO 4401-08-07 NFPA T3.5.1-D08 See Tech Infomation

Product Type

TP	Tapping Plate

Circuit

PT	P and T ports provided
AB	A and B ports provided

Port Threads

4P	0.25-18 NPTF ANSI B1.20.3
4S	-4 SAE ISO 11926; SAE 1926
4B	0.25-19 BSPP ISO 1179; BS 2779
4M	M10 x 1.0 ISO 6149
4T	0.25-19 BSPT ISO 7; BS 21

Thickness

150	For 1.5" thickness
OMIT for standard 1" thickness	

Daman Products Company, Inc. • 1811 North Home Street • Mishawaka, IN 46545-7267
Tel: 800.959.7841 574.259.7841 • Fax: 800.241.7664 • Email: sales@daman.com • www.daman.com

D08 Tapping Plates

X and Y Port Tapping Plate

Tapping Plate hardware / interface seal kit is supplied. See page 180 for itemized list.

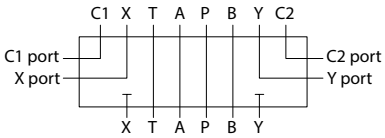

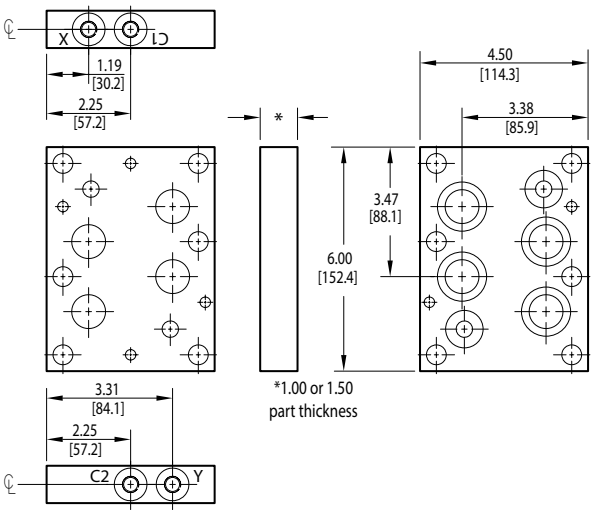

Specifications, descriptions, and dimensional data are subject to correction or change without notice or incurring obligation. Download latest catalog page revisions at www.daman.com.

Ordering Information

For **coating options** see pages 245-246.

Material	Valve Pattern	Product Type	Circuit	Port Threads	Thickness

Material

A	Aluminum - 6061-T6 3000† psi • 20.7 MPa
D	Ductile Iron - D4512 5000† psi • 34.5 MPa

† Working pressure should be considered in accordance with ISO 4413 to determine appropriate material type.

Valve Pattern

D08	ISO 4401-08-07 NFPA T3.5.1-D08 See Tech Infomation

Product Type

TP	Tapping Plate

Circuit

XY	X and Y ports provided

Port Threads

4P	0.25-18 NPTF ANSI B1.20.3
4S	-4 SAE ISO 11926; SAE 1926
4B	0.25-19 BSPP ISO 1179; BS 2779
4M	M10 x 1.0 ISO 6149
4T	0.25-19 BSPT ISO 7; BS 21

Thickness

150	For 1.5" thickness
OMIT for standard 1" thickness	

Daman Products Company, Inc. • 1811 North Home Street • Mishawaka, IN 46545-7267
Tel: 800.959.7841 574.259.7841 • Fax: 800.241.7664 • Email: sales@daman.com • www.daman.com

D08 Tapping Plates

Spot Drilled Tapping Plate

Tapping Plate hardware / interface seal kit is supplied. See page 180 for itemized list.

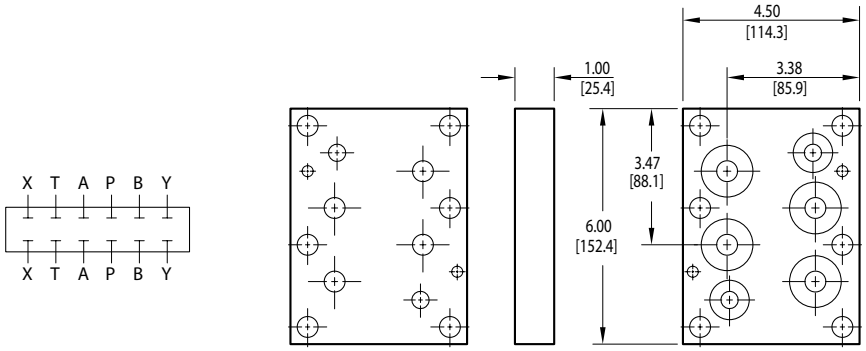

Specifications, descriptions, and dimensional data are subject to correction or change without notice or incurring obligation. Download latest catalog page revisions at www.daman.com.

Ordering Information

Material	Valve Pattern	Product Type	Circuit

For **coating options** see pages 245-246.

Material

A	Aluminum - 6061-T6 3000† psi • 20.7 MPa
D	Ductile Iron - D4512 5000† psi • 34.5 MPa

† Working pressure should be considered in accordance with ISO 4413 to determine appropriate material type.

Product Type

TP	Tapping Plate

Valve Pattern

D08	ISO 4401-08-07 NFPA T3.5.1-D08 See Tech Infomation

Circuit

SD	Spot drilled ports

Daman Products Company, Inc. • 1811 North Home Street • Mishawaka, IN 46545-7267
Tel: 800.959.7841 574.259.7841 • Fax: 800.241.7664 • Email: sales@daman.com • www.daman.com

D08 Tapping Plates

D03-D08 Two Station Tapping Plate

A_1 common to A_2, B_1 common to B_2

D03 Valve mtg: UNC #10-24 x 0.62 [16] DP
Tapping Plate hardware / interface seal kit is supplied. * See page 180 for itemized list.
* (6) bolts are user supplied and must pass through valve and tapping plate to thread into manifold.

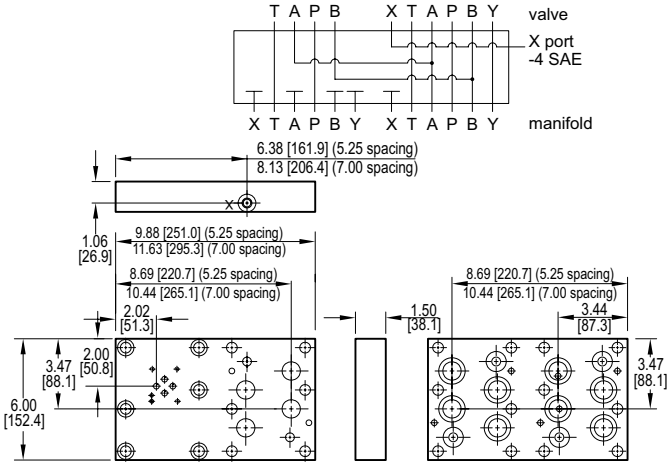

D05-D08 Two Station Tapping Plate

A_1 common to A_2, B_1 common to B_2

D05 Valve mtg: UNC 0.25-20 x 0.75 [19] DP
Tapping Plate hardware / interface seal kit is supplied. * See page 180 for itemized list.
* (6) bolts are user supplied and must pass through valve and tapping plate to thread into manifold.

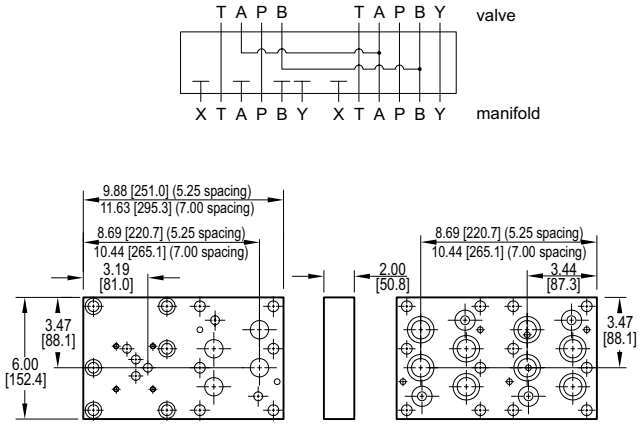

Specifications, descriptions, and dimensional data are subject to correction or change without notice or incurring obligation. Download latest catalog page revisions at www.daman.com.

Ordering Information

For **coating options** see pages 245-246.

Material	Valve Pattern Station 1	Valve Pattern Station 2	Product Type	No. of Stations	Valve Spacing	Circuit

Material

A	Aluminum - 6061-T6 3000† psi • 20.7 MPa
D	Ductile Iron - D4512 5000† psi • 34.5 MPa

† Working pressure should be considered in accordance with ISO 4413 to determine appropriate material type.

Valve Station 1

D03	ISO 4401-03-02 NFPA T3.5.1-D03 See Tech Infomation
D05	ISO 4401-05-04 NFPA T3.5.1-D05 See Tech Infomation

Valve Station 2

D08	ISO 4401-08-07 NFPA T3.5.1-D08 See Tech Infomation

Product Type

TP	Tapping Plate

No. of Stations

02	02 Stations

Valve Spacing

5	5.25 inch 133.4 mm
7	7.00 inch 177.8 mm

Circuit

AB	A1 common to A2 B1 common to B2

Daman Products Company, Inc. • 1811 North Home Street • Mishawaka, IN 46545-7267
Tel: 800.959.7841 574.259.7841 • Fax: 800.241.7664 • Email: sales@daman.com • www.daman.com

D10 Tapping Plates

P, T, A, B, X, Y, and L Port Tapping Plate

Tapping Plate hardware / interface seal kit is supplied. See page 180 for itemized list.

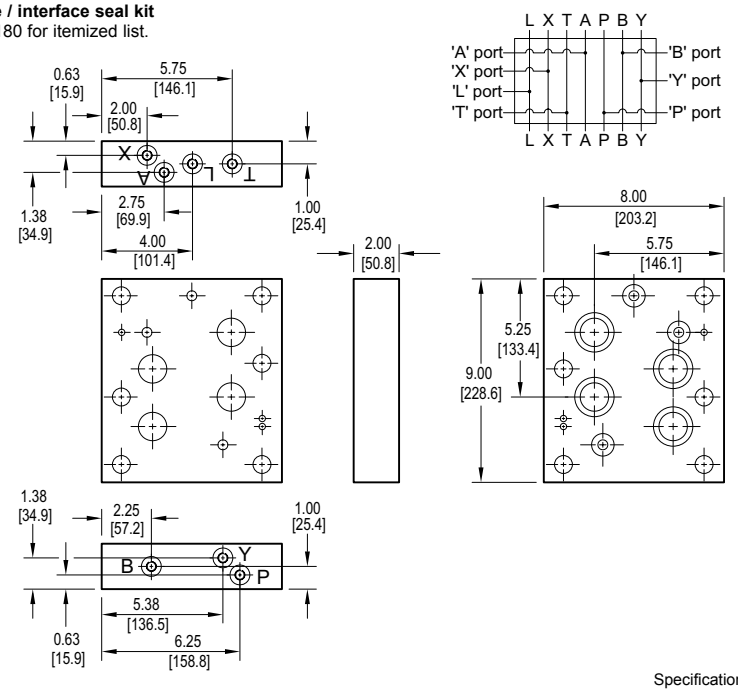

Specifications, descriptions, and dimensional data are subject to correction or change without notice or incurring obligation. Download latest catalog page revisions at www.daman.com.

Ordering Information

Material	Valve Pattern	Product Type	Circuit	Port Threads

For **coating options** see pages 245-246.

Material

A	Aluminum - 6061-T6 3000† psi • 20.7 MPa
D	Ductile Iron - D4512 5000† psi • 34.5 MPa

† Working pressure should be considered in accordance with ISO 4413 to determine appropriate material type.

Valve Pattern

D10	ISO 4401-10-08 NFPA T3.5.1-D10 See Tech Infomation

Product Type

TP	Tapping Plate

Circuit

PTAB	P, T, A, B, X, Y, and L ports provided

Port Threads

4P	0.25-18 NPTF ANSI B1.20.3
4S	-4 SAE ISO 11926; SAE 1926

NOTE: Page 178-179 "Flange Mount Bodies" moved to pp. 197.15-197.16.

Daman Products Company, Inc. • 1811 North Home Street • Mishawaka, IN 46545-7267
Tel: 800.959.7841 574.259.7841 • Fax: 800.241.7664 • Email: sales@daman.com • www.daman.com

Daman®

Tapping Plate Mounting Hardware

Part no.	Catalog pg.	Viton O-rings 90 durometer	Locating Pins	Plugs	Mounting Screws
* D03 TP PT 4P * D03 TP PT 4S * D03 TP PT 4B, M, T * D03 TP AB 4P * D03 TP AB 4S * D03 TP AB 4B, M, T * D03 TP L 4*	158	(4) -012	(1) 0.12 dia x 0.25 long	(1) 0.25-18 NPTF LSPP (1) -4 SAE hex socket plug n/a (1) 0.25-18 NPTF LSPP (1) -4 SAE hex socket plug n/a n/a	n/a
* D03 TP SD * D03 TP OP * D03 TP BTV	159	(4) -012	(1) 0.12 dia x 0.25 long	n/a (2) 0.06-27 NPTF LSPP n/a	n/a
* D03 TP 02 * AB	160	(8) -012	(2) 0.12 dia x 0.25 long	n/a	n/a
* D05 TP PT 4P * D05 TP PT 4S * D05 TP PT 4B, M, T * D05 TP AB 4P * D05 TP AB 4S * D05 TP AB 4B, M, T * D05 TP L 4*	161	(5) -014	n/a	(1) 0.25-18 NPTF LSPP (1) -4 SAE hex socket plug n/a (1) 0.25-18 NPTF LSPP (1) -4 SAE hex socket plug n/a n/a	n/a
* D05 TP SD * D05 TP BTV	162	(5) -014	n/a	n/a	n/a
* D05 TP 02 * AB	163	(10) -014	n/a	n/a	n/a
* D05H TP ** 4P * D05H TP ** 4S * D05H TP ** 4B, M, T	164	(2) -011, (5) -014	n/a	(1) 0.25-18 NPTF LSPP (1) -4 SAE hex socket plug n/a	n/a
* D05HE TP ** 4P * D05HE TP ** 4S * D05HE TP ** 4B, M, T	165	(7) -014	n/a	(1) 0.25-18 NPTF LSPP (1) -4 SAE hex socket plug n/a	n/a
* D05H TP XY 4P * D05H TP XY 4S * D05H TP XY 4B, M, T * D05H TP SD	166 166 166 167	(1) -011, (6) -014, and (1) -016	n/a	(3) 0.25-18 NPTF LSPP (3) -4 SAE hex socket plug n/a n/a	n/a
* D05H TP 02 * AB * D05HE TP 02 * AB	168	(4) -011, (10) -014 (14) -014	n/a	n/a	n/a
* D07 TP ** 4P * D07 TP ** 4S * D07 TP ** 4B, M, T	169	(2) -011, (4) -210	(2) 0.12 dia x 0.25 long	(1) 0.25-18 NPTF LSPP (1) -4 SAE hex socket plug n/a	n/a
* D07 TP XY 4P * D07 TP XY 4S * D07 TP XY 4B, M, T * D07 TP SD	170 170 170 171	(2) -011, (4) -210	(2) 0.12 dia x 0.25 long	(3) 0.25-18 NPTF LSPP (3) -4 SAE hex socket plug n/a n/a	n/a
* D05 D07 TP 02 4 AB	172	(4) -011, (8) -210	(4) 0.12 dia x 0.25 long	n/a	(1) UNC 0.25-20 x 2.00 SHCS & (4) 0.38-16 x 2.00 long SHCS
* D08 TP ** 4P * D08 TP ** 4S * D08 TP ** 4B, M, T	173	(2) -210, (4) -215	(2) 0.25 dia x 0.50 long	(1) 0.25-18 NPTF LSPP (1) -4 SAE hex socket plug n/a	n/a
* D08 TP XY 4P * D08 TP XY 4S * D08 TP XY 4B, M, T * D08 TP SD	174 174 174 175	(2) -210, (4) -215	(2) 0.25 dia x 0.50 long	(3) 0.25-18 NPTF LSPP (3) -4 SAE hex socket plug n/a n/a	n/a
* D03 D08 TP 02 * AB * D05 D08 TP 02 * AB	176	(4) -210, (8) -215	(4) 0.25 dia x 0.50 long	n/a	(6) UNC 0.50-13 x 1.50 SHCS (6) UNC 0.50-13 x 2.00 SHCS
* D10 TP PTAB 4*	177	(3) -210, (4) -222	(2) 0.25 dia x 0.50 long	n/a	n/a

Daman Products Company, Inc. • 1811 North Home Street • Mishawaka, IN 46545-7267
Tel: 800.959.7841 574.259.7841 • Fax: 800.241.7664 • Email: sales@daman.com • www.daman.com

CARTRIDGE VALVE CAVITY BODIES

DIN Cavity Bodies

ISO 7368 • DIN 24342 • NFPA T3.5.45 STANDARDS

16mm Body • XA Circuit	Page 186
16mm Body • XB Circuit	Page 187
25mm Body • XA Circuit	Page 188
25mm Body • XB Circuit	Page 189
32mm Body • XA Circuit	Page 190
32mm Body • XB Circuit	Page 191
40mm Body • XA Circuit	Page 192
40mm Body • XB Circuit	Page 193
50mm Body • XA Circuit	Page 194
50mm Body • XB Circuit	Page 195
63mm Body • XA Circuit	Page 196
63mm Body • XB Circuit	Page 197

Sun Cavity Bodies

17-4 Stainless Steel	Pages 197.2-197.4
Aluminum	Pages 197.5-197.7
Ductile	Pages 197.5-197.7
Aluminum With Gauge Ports	Pages 197.8-197.10
Ductile With Gauge Ports	Pages 197.8-197.10

Common Cavity Bodies

Aluminum	Pages 197.11-197.12
Ductile	Pages 197.11-197.12
Aluminum With Gauge Ports	Pages 197.13-197.14
Ductile With Gauge Ports	Pages 197.13-197.14

Sun-Common Cavity Body Mounting Hardware	Pages 197.15-197.16

Flange Mount Bodies

Aluminum	Page 197.17
Ductile	Page 197.18

DIN Bodies

The pages in this section are our standard product offerings for DIN bodies. If you need a custom DIN body solution please visit **www.daman.com** for Request For Quote (RFQ) instructions.

The next two pages contain information about our tooling, inspection and advanced capabilities for creating custom DIN products.

Daman Products Company, Inc. • 1811 North Home Street • Mishawaka, IN 46545-7267
Tel: 800.959.7841 574.259.7841 • Fax: 800.241.7664 • Email: sales@daman.com • www.daman.com

LOGIC VALVE MANIFOLDS

Daman provides both standard and custom logic valve manifolds and bodies. Our team is able to repeatedly meet the high tolerances required in logic valve technology with the help of our dedicated tooling for eight different valve sizes.

Material grades for our logic valve cavities include: aluminum, ductile iron and other grades of steel.

- We have invested over $320,000 in dedicated tooling and inspection equipment.
- Air gauge equipment includes air spindles and master ring gauges to inspect diameters, taper, and roundness to plus or minus one ten-thousandth of an inch.
- We use profilometers to measure surface finish inside the cavities.
- All Daman manifolds are washed in an ultrasonic wash to remove machining particles and provide light corrosion protection.

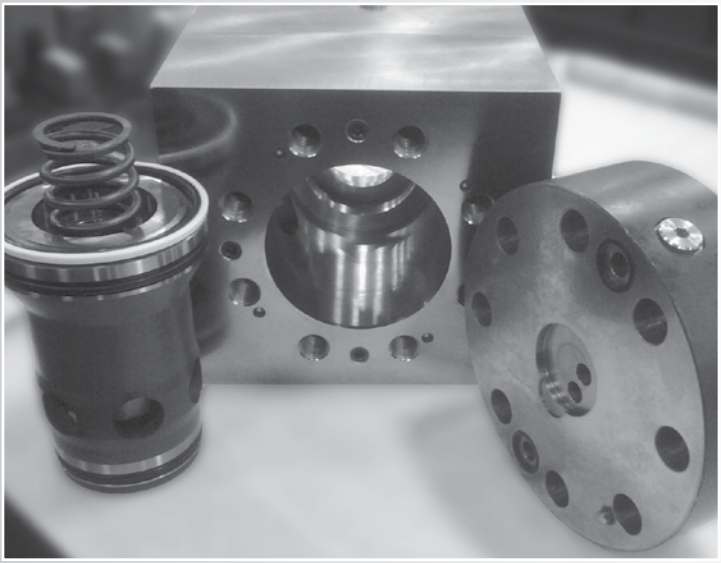

The last thing you should have to worry about is your logic valve manifold quality.

To learn more about Daman's logic valve cavities, please contact us.

1811 North Home Street, Mishawaka, Indiana 46545-7267 USA
North America: 800.959.7841 · Fax: 800.241.7664
International: Tel: +1.574.259.7841 · Fax: +1.574.259.7665
Email: sales@daman.com · Web: www.daman.com

ULTRASONIC WASH

Daman's commitment to ultrasonic wash technology includes a $750,000 capital investment to remove machining particles and provide light corrosion protection.

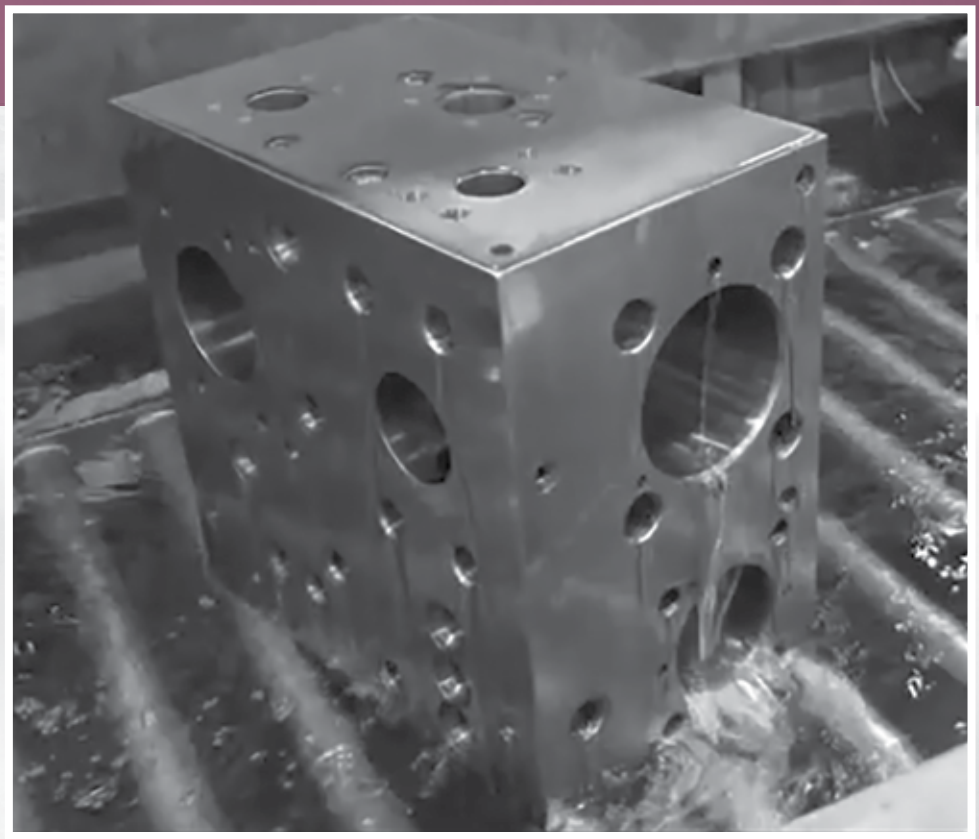

Daman®

www.daman.com

16mm Body • XA Circuit

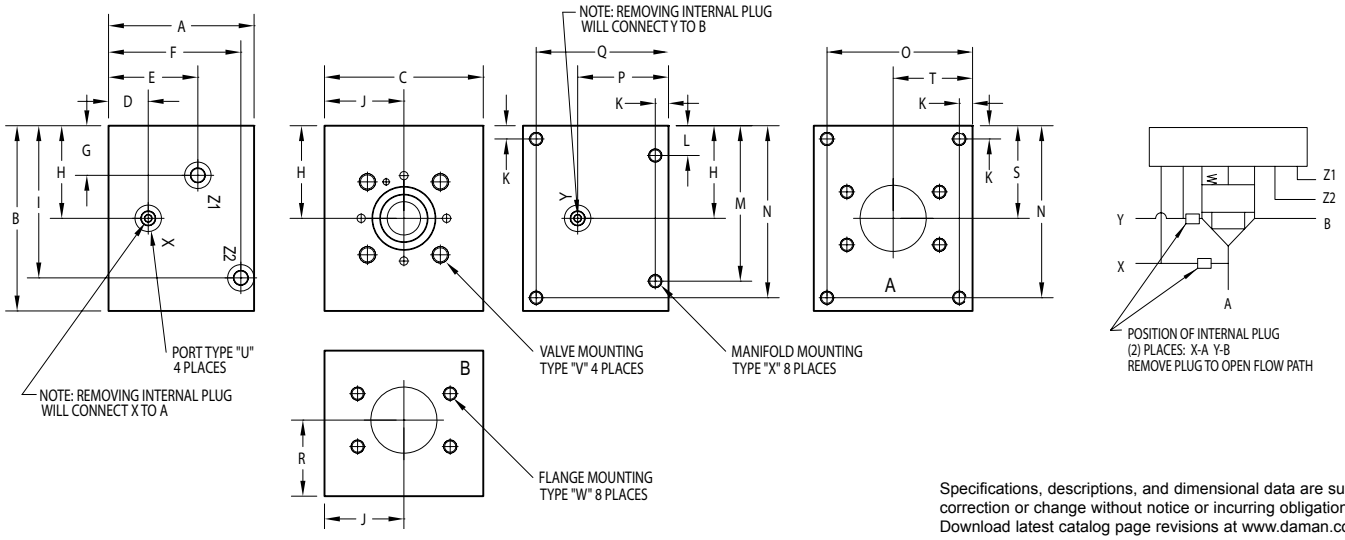

Specifications, descriptions, and dimensional data are subject to correction or change without notice or incurring obligation. Download latest catalog page revisions at www.daman.com.

PART NO.	A	B	C	D	E	F	G	H	I	J	K	L	M	N	O	P
*16XA16F61 *16XA16F61M	3.50 [88.9]	4.00 [101.6]	3.00 [76.2]	1.00 [25.4]	1.56 [39.7]	2.00 [50.8]	0.75 [19.1]	1.63 [41.3]	2.63 [66.7]	1.50 [38.1]	0.31 [7.9]	0.69 [17.5]	3.31 [84.1]	3.69 [93.7]	2.69 [68.3]	2.14 [54.3]
*16XB16F61 *16XB16F61M	3.50 [88.9]	4.00 [101.6]	3.00 [76.2]	2.14 [54.3]	--	2.00 [50.8]	1.00 [25.4]	1.63 [41.3]	2.63 [66.7]	1.50 [38.1]	0.31 [7.9]	0.69 [17.5]	3.31 [84.1]	3.69 [93.7]	2.69 [68.3]	2.14 [54.3]
D16XA16F62 D16XA16F62M	3.50 [88.9]	4.25 [108.0]	3.50 [88.9]	1.00 [25.4]	1.56 [39.7]	2.00 [50.8]	0.88 [22.2]	1.88 [47.6]	2.88 [73.0]	1.75 [44.5]	0.31 [7.9]	0.69 [17.5]	3.56 [90.5]	3.94 [100.0]	3.19 [81.0]	2.14 [54.3]
D16XB16F62 D16XB16F62M	3.50 [88.9]	4.25 [108.0]	3.50 [88.9]	2.14 [54.3]	--	2.00 [50.8]	1.00 [25.4]	1.88 [47.6]	2.88 [73.0]	1.75 [44.5]	0.31 [7.9]	0.69 [17.5]	3.56 [90.5]	3.94 [100.0]	3.19 [81.0]	2.14 [54.3]
*16XA20F61 *16XA20F61M	3.50 [88.9]	4.00 [101.6]	3.50 [88.9]	1.00 [25.4]	2.14 [54.3]	2.14 [54.3]	0.63 [15.9]	1.63 [41.3]	2.63 [66.7]	1.75 [44.5]	0.31 [7.9]	0.66 [16.7]	3.34 [84.9]	3.69 [93.6]	3.19 [81.0]	2.14 [54.3]
*16XB20F61 *16XB20F61M	3.50 [88.9]	4.00 [101.6]	3.50 [88.9]	2.14 [54.3]	--	2.14 [54.3]	1.00 [25.4]	1.63 [41.3]	2.63 [66.7]	1.75 [44.5]	0.31 [7.9]	0.66 [16.7]	3.34 [84.9]	3.69 [93.6]	3.19 [81.0]	2.14 [54.3]
D16XA20F62 D16XA20F62M	4.00 [101.6]	4.50 [114.3]	4.00 [101.6]	1.50 [38.1]	2.64 [67.1]	2.50 [63.5]	1.13 [28.6]	2.13 [54.0]	3.13 [79.4]	2.00 [50.8]	0.38 [9.5]	0.88 [22.2]	3.63 [92.1]	4.13 [104.8]	3.63 [92.1]	2.64 [67.1]
D16XB20F62 D16XB20F62M	4.00 [101.6]	4.50 [114.3]	4.00 [101.6]	2.64 [67.1]	--	2.50 [63.5]	1.50 [38.1]	2.13 [54.0]	3.13 [79.4]	2.00 [50.8]	0.38 [9.5]	0.88 [22.2]	3.63 [92.1]	4.13 [104.8]	3.63 [92.1]	2.64 [67.1]

PART NO.	Q	R	S	T	U pilot port size	V valve mounting	W flange mounting	X manifold mounting
*16XA16F61 *16XA16F61M	3.19 [81.0]	2.14 [54.3]	1.63 [41.3]	1.50 [38.1]	SAE #4 ISO 6149 M10	0.31 UNC x 0.88 DP M8 ISO 6H x [22] DP	0.38 UNC x 0.88 DP M10 ISO 6H x [22] DP	0.31 UNC x 0.63 DP M8 ISO 6H x [16] DP
*16XB16F61 *16XB16F61M	3.19 [81.0]	2.14 [54.3]	1.63 [41.3]	1.50 [38.1]	SAE #4 ISO 6149 M10	0.31 UNC x 0.88 DP M8 ISO 6H x [22] DP	0.38 UNC x 0.88 DP M10 ISO 6H x [22] DP	0.31 UNC x 0.63 DP M8 ISO 6H x [16] DP
D16XA16F62 D16XA16F62M	3.19 [81.0]	2.00 [50.8]	1.88 [47.6]	1.75 [44.5]	SAE #4 ISO 6149 M10	0.31 UNC x 0.88 DP M8 ISO 6H x [22] DP	0.44 UNC x 1.12 DP M10 ISO 6H x [30] DP	0.31 UNC x 0.63 DP M8 ISO 6H x [16] DP
D16XB16F62 D16XB16F62M	3.19 [81.0]	2.00 [50.8]	1.88 [47.6]	1.75 [44.5]	SAE #4 ISO 6149 M10	0.31 UNC x 0.88 DP M8 ISO 6H x [22] DP	0.44 UNC x 1.12 DP M10 ISO 6H x [30] DP	0.31 UNC x 0.63 DP M8 ISO 6H x [16] DP
*16XA20F61 *16XA20F61M	3.19 [81.0]	2.14 [54.3]	1.67 [42.5]	1.75 [44.5]	SAE #4 ISO 6149 M10	0.31 UNC x 0.88 DP M8 ISO 6H x [22] DP	0.44 UNC x 1.12 DP M10 ISO 6H x [28] DP	0.31 UNC x 0.63 DP M8 ISO 6H x [16] DP
*16XB20F61 *16XB20F61M	3.19 [81.0]	2.14 [54.3]	1.67 [42.5]	1.75 [44.5]	SAE #4 ISO 6149 M10	0.31 UNC x 0.88 DP M8 ISO 6H x [22] DP	0.44 UNC x 1.12 DP M10 ISO 6H x [28] DP	0.31 UNC x 0.63 DP M8 ISO 6H x [16] DP
D16XA20F62 D16XA20F62M	3.63 [92.1]	2.47 [62.7]	2.13 [54.0]	2.00 [50.8]	SAE #4 ISO 6149 M10	0.31 UNC x 0.88 DP M8 ISO 6H x [22] DP	0.50 UNC x 1.19 DP M12 ISO 6H x [30] DP	0.38 UNC x 1.00 DP M10 ISO 6H x [25] DP
D16XB20F62 D16XB20F62M	3.63 [92.1]	2.47 [62.7]	2.13 [54.0]	2.00 [50.8]	SAE #4 ISO 6149 M10	0.31 UNC x 0.88 DP M8 ISO 6H x [22] DP	0.50 UNC x 1.19 DP M12 ISO 6H x [30] DP	0.38 UNC x 1.00 DP M10 ISO 6H x [25] DP

Daman Products Company, Inc. • 1811 North Home Street • Mishawaka, IN 46545-7267
Tel: 800.959.7841 574.259.7841 • Fax: 800.241.7664 • Email: sales@daman.com • www.daman.com

16mm Body • XB Circuit

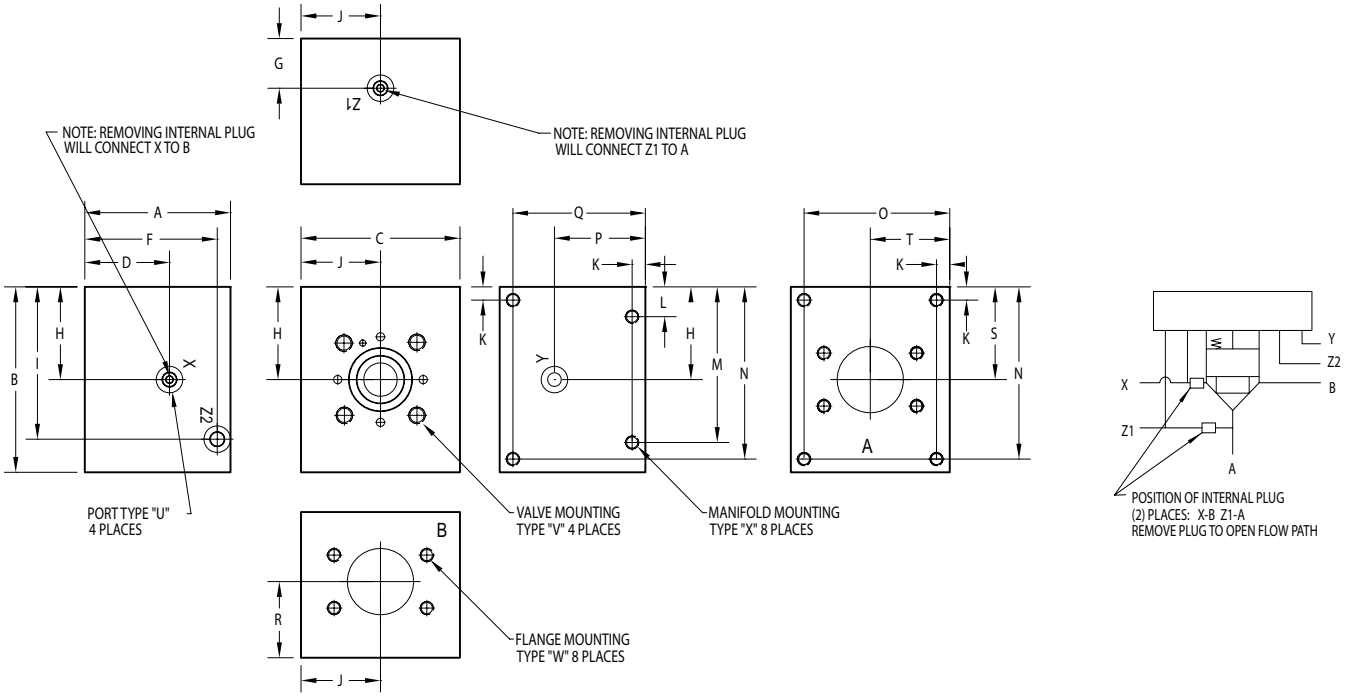

Specifications, descriptions, and dimensional data are subject to correction or change without notice or incurring obligation. Download latest catalog page revisions at www.daman.com.

Ordering Information

For **coating options** see pages 245-246.

Material	Valve Cavity	Pilot Circuit	A & B Port Size	Flange Rating	Thread Type

Material

A	Aluminum - 6061-T6 3000† psi • 20.7 MPa
D	Ductile Iron - D4512 5000† psi • 34.5 MPa

† Working pressure should be considered in accordance with ISO 4413 to determine appropriate material type.

Pilot Circuit

XA	X common to A Y common to B
XB	X common to B Z1 common to A

These connections are furnished plugged (external pilot ports). Remove plugs for internal pilot ports. See circuit diagram.

Flange Rating

Aluminum or Ductile	
61	ISO 6162 - 2.5 to 35 MPa SAE code 61
Ductile only	
62	ISO 6162 - 40 MPa series SAE code 62

Valve Cavity

16	DIN 24342 - 16mm ISO 7368-06-01 (Standard currently under revision) NFPA T3.5.45-BA-06-2-A

A & B Port Size

16F	ISO 6162 - DN25 Split Flange SAE Size 16 (1.00") Flange
20F	ISO 6162 - DN32 Split Flange SAE Size 20 (1.25") Flange

Thread Type

Omit	Inch threads / ports
M	Metric threads / ports

Daman Products Company, Inc. • 1811 North Home Street • Mishawaka, IN 46545-7267
Tel: 800.959.7841 574.259.7841 • Fax: 800.241.7664 • Email: sales@daman.com • www.daman.com

25mm Body • XA Circuit

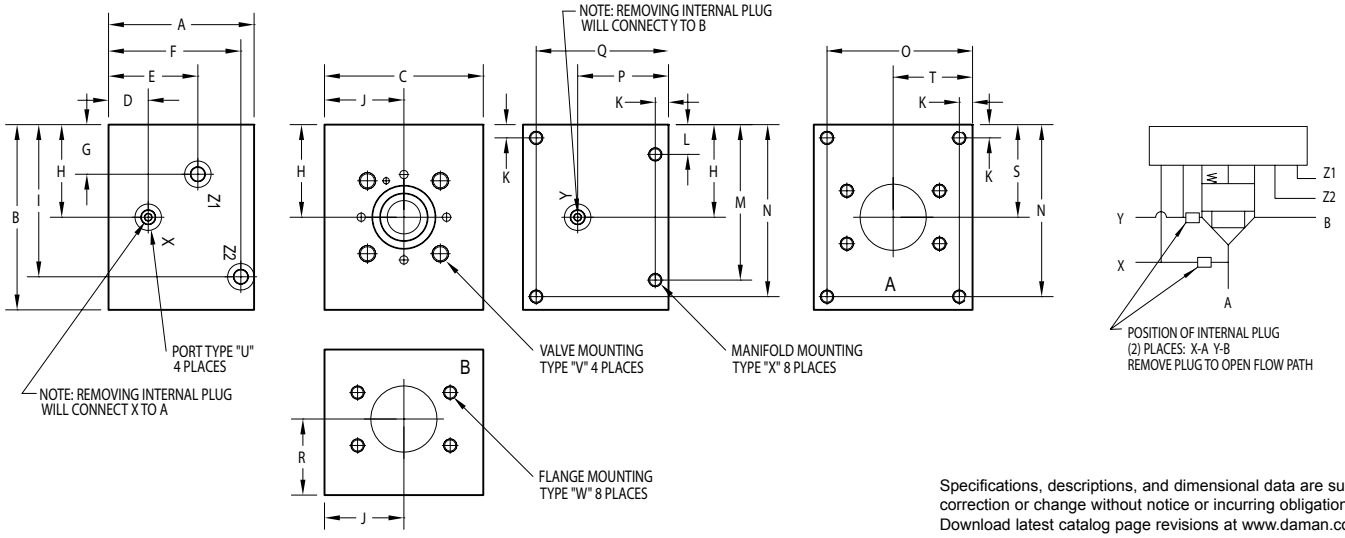

Specifications, descriptions, and dimensional data are subject to correction or change without notice or incurring obligation. Download latest catalog page revisions at www.daman.com.

PART NO.	A	B	C	D	E	F	G	H	I	J	K	L	M	N	O	P
*25XA20F61 *25XA20F61M	4.00 [101.6]	5.00 [127.0]	4.50 [114.3]	0.75 [19.1]	2.13 [54.0]	3.50 [88.9]	0.53 [13.5]	1.88 [47.6]	3.75 [95.3]	2.25 [57.2]	0.38 [9.5]	0.88 [22.2]	4.13 [104.8]	4.63 [117.5]	4.13 [104.8]	2.25 [57.2]
*25XB20F61 *25XB20F61M	4.00 [101.6]	5.00 [127.0]	4.50 [114.3]	2.25 [57.2]	--	3.50 [88.9]	0.75 [19.1]	1.88 [47.6]	3.75 [95.3]	2.25 [57.2]	0.38 [9.5]	0.88 [22.2]	4.13 [104.8]	4.63 [117.5]	4.13 [104.8]	2.25 [57.2]
D25XA20F62 D25XA20F62M	4.00 [101.6]	5.00 [127.0]	4.50 [114.3]	0.75 [19.1]	2.13 [54.0]	3.50 [88.9]	0.72 [18.3]	2.06 [52.4]	3.94 [100.0]	2.25 [57.2]	0.38 [9.5]	0.88 [22.2]	4.13 [104.8]	4.63 [117.5]	4.13 [104.8]	2.25 [57.2]
D25XB20F62 D25XB20F62M	4.00 [101.6]	5.00 [127.0]	4.50 [114.3]	2.25 [57.2]	--	3.50 [88.9]	0.75 [19.1]	2.06 [52.4]	3.94 [100.0]	2.25 [57.2]	0.38 [9.5]	0.88 [22.2]	4.13 [104.8]	4.63 [117.5]	4.13 [104.8]	2.25 [57.2]
*25XA32F61 *25XA32F61M	5.00 [127.0]	6.00 [152.4]	4.50 [114.3]	1.75 [44.5]	3.13 [79.4]	4.50 [114.3]	1.53 [38.9]	2.88 [73.0]	4.75 [120.7]	2.25 [57.2]	0.50 [12.7]	1.13 [28.6]	4.88 [123.8]	5.50 [139.7]	4.00 [101.6]	3.25 [82.6]
*25XB32F61 *25XB32F61M	5.00 [127.0]	6.00 [152.4]	4.50 [114.3]	3.25 [82.6]	--	4.50 [114.3]	1.75 [44.5]	2.88 [73.0]	4.75 [120.7]	2.25 [57.2]	0.50 [12.7]	1.13 [28.6]	4.88 [123.8]	5.50 [139.7]	4.00 [101.6]	3.25 [82.6]
D25XA32F62 D25XA32F62M	5.00 [127.0]	6.50 [165.1]	6.00 [152.4]	1.75 [44.5]	3.13 [79.4]	4.50 [114.3]	1.78 [45.2]	3.13 [79.4]	5.00 [127.0]	3.00 [76.2]	0.50 [12.7]	1.13 [28.6]	5.38 [136.5]	6.00 [152.4]	5.50 [139.7]	3.25 [82.6]
D25XB32F62 D25XB32F62M	5.00 [101.6]	6.50 [165.1]	6.00 [152.4]	3.25 [82.6]	--	4.50 [114.3]	1.75 [44.5]	3.13 [79.4]	5.00 [127.0]	3.00 [76.2]	0.50 [12.7]	1.13 [28.6]	5.38 [136.5]	6.00 [152.4]	5.50 [139.7]	3.25 [82.6]

PART NO.	Q	R	S	T	U pilot port size	V valve mounting	W flange mounting	X manifold mounting
*25XA20F61 *25XA20F61M	3.63 [92.1]	2.25 [57.2]	1.88 [47.6]	2.25 [57.2]	SAE #6 ISO 6149 M14	0.50 UNC x 1.19 DP M12 ISO 6H x 30 DP	0.44 UNC x 1.12 DP M10 ISO 6H x 28 DP	0.38 UNC x 0.75 DP M10 ISO 6H x 19 DP
*25XB20F61 *25XB20F61M	3.63 [92.1]	2.25 [57.2]	1.88 [47.6]	2.25 [57.2]	SAE #6 ISO 6149 M14	0.50 UNC x 1.19 DP M12 ISO 6H x 30 DP	0.44 UNC x 1.12 DP M10 ISO 6H x 28 DP	0.38 UNC x 0.75 DP M10 ISO 6H x 19 DP
D25XA20F62 D25XA20F62M	3.63 [92.1]	2.25 [57.2]	2.06 [52.4]	2.25 [57.2]	SAE #6 ISO 6149 M14	0.50 UNC x 1.19 DP M12 ISO 6H x 30 DP	0.50 UNC x 1.19 DP M12 ISO 6H x 30 DP	0.38 UNC x 1.00 DP M10 ISO 6H x 25 DP
D25XB20F62 D25XB20F62M	3.63 [92.1]	2.25 [57.2]	2.06 [52.4]	2.25 [57.2]	SAE #6 ISO 6149 M14	0.50 UNC x 1.19 DP M12 ISO 6H x 30 DP	0.50 UNC x 1.19 DP M12 ISO 6H x 30 DP	0.38 UNC x 1.00 DP M10 ISO 6H x 25 DP
*25XA32F61 *25XA32F61M	4.50 [114.3]	2.75 [69.9]	2.88 [73.0]	2.25 [57.2]	SAE #6 ISO 6149 M14	0.50 UNC x 1.19 DP M12 ISO 6H x 30 DP	0.50 UNC x 1.19 DP M12 ISO 6H x 30 DP	0.50 UNC x 1.00 DP M12 ISO 6H x 25 DP
*25XB32F61 *25XB32F61M	4.50 [114.3]	2.75 [69.9]	2.88 [73.0]	2.25 [57.2]	SAE #6 ISO 6149 M14	0.50 UNC x 1.19 DP M12 ISO 6H x 30 DP	0.50 UNC x 1.19 DP M12 ISO 6H x 30 DP	0.50 UNC x 1.00 DP M12 ISO 6H x 25 DP
D25XA32F62 D25XA32F62M	4.50 [114.3]	2.75 [69.9]	3.13 [79.4]	3.00 [76.2]	SAE #6 ISO 6149 M14	0.50 UNC x 1.19 DP M12 ISO 6H x 30 DP	0.75 UNC x 1.62 DP M20 ISO 6H x 41 DP	0.50 UNC x 1.00 DP M12 ISO 6H x 25 DP
D25XB32F62 D25XB32F62M	4.50 [114.3]	2.75 [69.9]	3.13 [79.4]	3.00 [76.2]	SAE #6 ISO 6149 M14	0.50 UNC x 1.19 DP M12 ISO 6H x 30 DP	0.75 UNC x 1.62 DP M20 ISO 6H x 41 DP	0.50 UNC x 1.00 DP M12 ISO 6H x 25 DP

Daman Products Company, Inc. • 1811 North Home Street • Mishawaka, IN 46545-7267
Tel: 800.959.7841 574.259.7841 • Fax: 800.241.7664 • Email: sales@daman.com • www.daman.com

25mm Body • XB Circuit

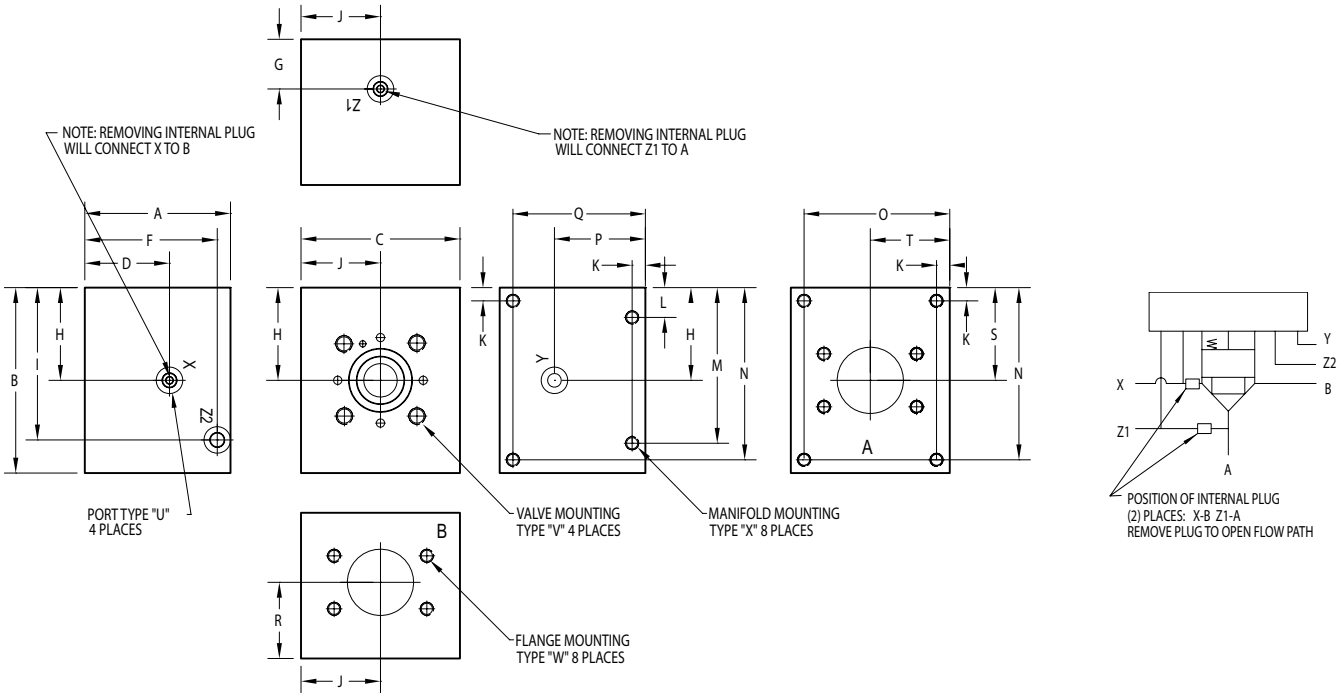

Specifications, descriptions, and dimensional data are subject to correction or change without notice or incurring obligation. Download latest catalog page revisions at www.daman.com.

Ordering Information

For **coating options** see pages 245-246.

Material	Valve Cavity	Pilot Circuit	A & B Port Size	Flange Rating	Thread Type

Material

A	Aluminum - 6061-T6 3000† psi • 20.7 MPa
D	Ductile Iron - D4512 5000† psi • 34.5 MPa

† Working pressure should be considered in accordance with ISO 4413 to determine appropriate material type.

Pilot Circuit

XA	X common to A Y common to B
XB	X common to B Z1 common to A

These connections are furnished plugged (external pilot ports). Remove plugs for internal pilot ports. See circuit diagram.

Flange Rating

Aluminum or Ductile	
61	ISO 6162 - 2.5 to 35 MPa SAE code 61
Ductile only	
62	ISO 6162 - 40 MPa series SAE code 62

Valve Cavity

25	DIN 24342 - 25mm ISO 7368-08-03 (Standard currently under revision) NFPA T3.5.45-BB-08-2-A

A & B Port Size

20F	ISO 6162 - DN32 Split Flange SAE Size 20 (1.25") Flange
32F	ISO 6162 - DN51 Split Flange SAE Size 32 (2.00") Flange

Thread Type

Omit	Inch threads / ports
M	Metric threads / ports

Daman Products Company, Inc. • 1811 North Home Street • Mishawaka, IN 46545-7267
Tel: 800.959.7841 574.259.7841 • Fax: 800.241.7664 • Email: sales@daman.com • www.daman.com

32mm Body • XA Circuit

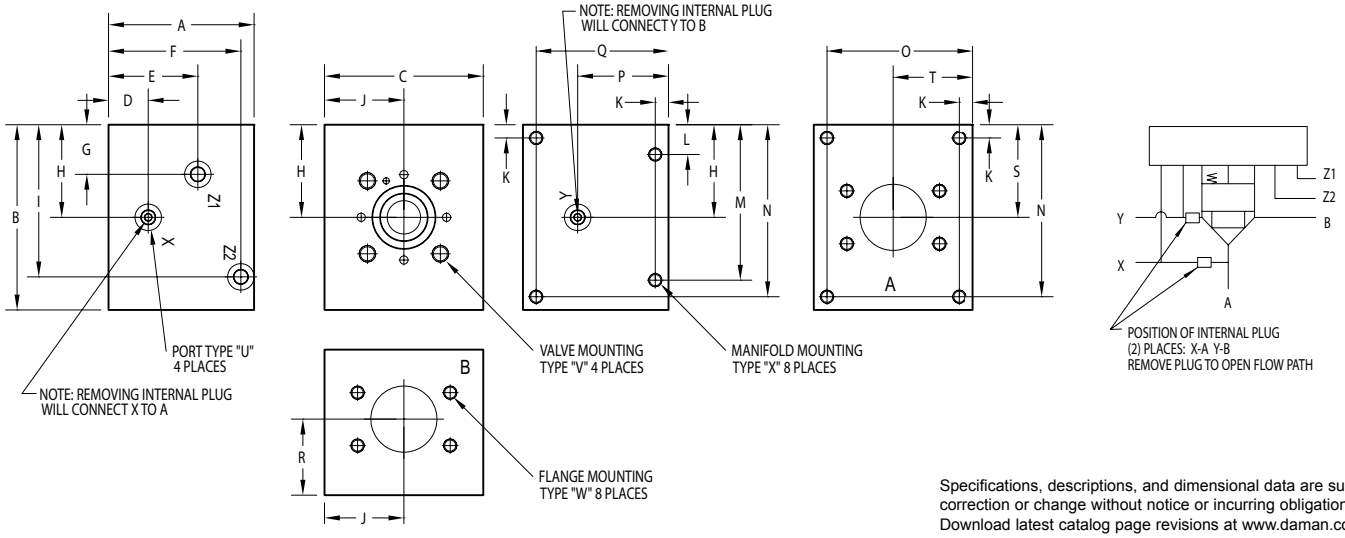

Specifications, descriptions, and dimensional data are subject to correction or change without notice or incurring obligation. Download latest catalog page revisions at www.daman.com.

PART NO.	A	B	C	D	E	F	G	H	I	J	K	L	M	N	O	P
*32XA24F61 *32XA24F61M	5.50 [139.7]	6.00 [152.4]	6.00 [152.4]	1.50 [38.1]	3.38 [85.7]	5.00 [127.0]	0.88 [22.2]	2.50 [63.5]	4.75 [120.7]	3.00 [76.2]	0.50 [12.7]	1.13 [28.6]	4.88 [123.8]	5.50 [139.7]	5.50 [139.7]	3.43 [87.2]
*32XB24F61 *32XB24F61M	5.50 [139.7]	6.00 [152.4]	6.00 [152.4]	3.43 [87.2]	--	5.00 [127.0]	1.50 [38.1]	2.50 [63.5]	4.75 [120.7]	3.00 [76.2]	0.50 [12.7]	1.13 [28.6]	4.88 [123.8]	5.50 [139.7]	5.50 [139.7]	3.43 [87.2]
D32XA24F62 D32XA24F62M	5.50 [139.7]	6.00 [152.4]	6.00 [152.4]	1.50 [38.1]	3.38 [85.7]	5.00 [127.0]	0.88 [22.2]	2.50 [63.5]	4.75 [120.7]	3.00 [76.2]	0.50 [12.7]	1.13 [28.6]	4.88 [123.8]	5.50 [139.7]	5.50 [139.7]	3.43 [87.2]
D32XB24F62 D32XB24F62M	5.50 [139.7]	6.00 [152.4]	6.00 [152.4]	3.43 [87.2]	--	5.00 [127.0]	1.50 [38.1]	2.50 [63.5]	4.75 [120.7]	3.00 [76.2]	0.50 [12.7]	1.13 [28.6]	4.88 [123.8]	5.50 [139.7]	5.50 [139.7]	3.43 [87.2]
*32XA40F61 *32XA40F61M	5.50 [139.7]	7.00 [177.8]	6.00 [152.4]	1.50 [38.1]	3.38 [85.7]	5.00 [127.0]	1.88 [47.6]	3.50 [88.9]	5.75 [146.1]	3.00 [76.2]	0.50 [12.7]	1.13 [28.6]	5.88 [149.2]	6.50 [165.1]	5.50 [139.7]	3.43 [87.2]
*32XB40F61 *32XB40F61M	5.50 [139.7]	7.00 [177.8]	6.00 [152.4]	3.43 [87.2]	--	5.00 [127.0]	1.50 [38.1]	3.50 [88.9]	5.75 [146.1]	3.00 [76.2]	0.50 [12.7]	1.13 [28.6]	5.88 [149.2]	6.50 [165.1]	5.50 [139.7]	3.43 [87.2]
D32XA40F62 D32XA40F62M	6.50 [165.1]	8.00 [203.2]	7.50 [190.5]	2.50 [63.5]	4.38 [111.1]	6.00 [152.4]	2.38 [60.3]	4.00 [101.6]	6.25 [158.8]	3.75 [95.3]	0.63 [15.9]	1.38 [34.9]	6.63 [168.3]	7.38 [187.3]	6.88 [174.6]	4.43 [112.6]
D32XB40F62 D32XB40F62M	6.50 [165.1]	8.00 [203.2]	7.50 [190.5]	4.43 [112.6]	--	6.00 [152.4]	2.50 [63.5]	4.00 [101.6]	6.25 [158.8]	3.75 [95.3]	0.63 [15.9]	1.38 [34.9]	6.63 [168.3]	7.38 [187.3]	6.88 [174.6]	4.43 [112.6]

PART NO.	Q	R	S	T	U pilot port size	V valve mounting	W flange mounting	X manifold mounting
*32XA24F61 *32XA24F61M	5.00 [127.0]	3.43 [87.2]	2.50 [63.5]	3.00 [76.2]	SAE #6 ISO 6149 M14	0.63 UNC x 1.44 DP M16 ISO 6H x 36 DP	0.50 UNC x 1.19 DP M12 ISO 6H x 30 DP	0.50 UNC x 1.00 DP M12 ISO 6H x 25 DP
*32XB24F61 *32XB24F61M	5.00 [127.0]	3.43 [87.2]	2.50 [63.5]	3.00 [76.2]	SAE #6 ISO 6149 M14	0.63 UNC x 1.44 DP M16 ISO 6H x 36 DP	0.50 UNC x 1.19 DP M12 ISO 6H x 30 DP	0.50 UNC x 1.00 DP M12 ISO 6H x 25 DP
D32XA24F62 D32XA24F62M	5.00 [127.0]	3.43 [87.2]	2.50 [63.5]	3.00 [76.2]	SAE #6 ISO 6149 M14	0.63 UNC x 1.44 DP M16 ISO 6H x 36 DP	0.63 UNC x 1.44 DP M16 ISO 6H x 36 DP	0.50 UNC x 1.00 DP M12 ISO 6H x 25 DP
D32XB24F62 D32XB24F62M	5.00 [127.0]	3.43 [87.2]	2.50 [63.5]	3.00 [76.2]	SAE #6 ISO 6149 M14	0.63 UNC x 1.44 DP M16 ISO 6H x 36 DP	0.63 UNC x 1.44 DP M16 ISO 6H x 36 DP	0.50 UNC x 1.00 DP M12 ISO 6H x 25 DP
*32XA40F61 *32XA40F61M	5.00 [127.0]	2.88 [73.0]	3.50 [88.9]	3.00 [76.2]	SAE #6 ISO 6149 M14	0.63 UNC x 1.44 DP M16 ISO 6H x 36 DP	0.50 UNC x 1.19 DP M12 ISO 6H x 30 DP	0.50 UNC x 1.00 DP M12 ISO 6H x 25 DP
*32XB40F61 *32XB40F61M	5.00 [127.0]	2.88 [73.0]	3.50 [88.9]	3.00 [76.2]	SAE #6 ISO 6149 M14	0.63 UNC x 1.44 DP M16 ISO 6H x 36 DP	0.50 UNC x 1.19 DP M12 ISO 6H x 30 DP	0.50 UNC x 1.00 DP M12 ISO 6H x 25 DP
D32XA40F62 D32XA40F62M	5.88 [149.2]	3.38 [85.7]	4.00 [101.6]	3.75 [95.3]	SAE #6 ISO 6149 M14	0.63 UNC x 1.44 DP M16 ISO 6H x 36 DP	0.88 UNC x 1.88 DP M24 ISO 6H x 48 DP	0.63 UNC x 1.44 DP M16 ISO 6H x 36 DP
D32XB40F62 D32XB40F62M	5.88 [149.2]	3.38 [85.7]	4.00 [101.6]	3.75 [95.3]	SAE #6 ISO 6149 M14	0.63 UNC x 1.44 DP M16 ISO 6H x 36 DP	0.88 UNC x 1.88 DP M24 ISO 6H x 48 DP	0.63 UNC x 1.44 DP M16 ISO 6H x 36 DP

Daman Products Company, Inc. • 1811 North Home Street • Mishawaka, IN 46545-7267
Tel: 800.959.7841 574.259.7841 • Fax: 800.241.7664 • Email: sales@daman.com • www.daman.com

Daman®

32mm Body • XB Circuit

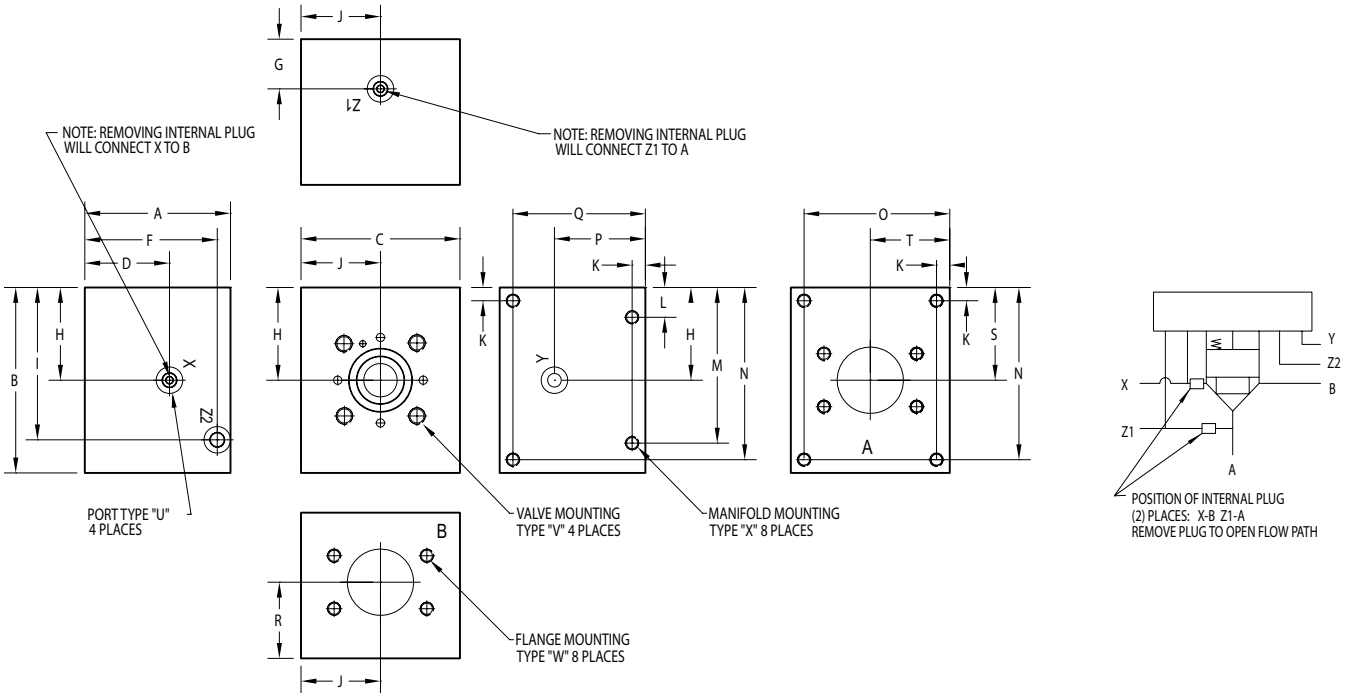

Specifications, descriptions, and dimensional data are subject to correction or change without notice or incurring obligation. Download latest catalog page revisions at www.daman.com.

Ordering Information

For **coating options** see pages 245-246.

Material	Valve Cavity	Pilot Circuit	A & B Port Size	Flange Rating	Thread Type

Material

A	Aluminum - 6061-T6 3000† psi • 20.7 MPa
D	Ductile Iron - D4512 5000† psi • 34.5 MPa

† Working pressure should be considered in accordance with ISO 4413 to determine appropriate material type.

Pilot Circuit

XA	X common to A Y common to B
XB	X common to B Z1 common to A

These connections are furnished plugged (external pilot ports). Remove plugs for internal pilot ports. See circuit diagram.

Flange Rating

Aluminum or Ductile	
61	ISO 6162 - 2.5 to 35 MPa SAE code 61
Ductile only	
62	ISO 6162 - 40 MPa series SAE code 62

Valve Cavity

32	DIN 24342 - 32mm ISO 7368-09-05 (Standard currently under revision) NFPA T3.5.45-BC-09-2-A

A & B Port Size

24F	ISO 6162 - DN38 Split Flange SAE Size 24 (1.50") Flange
40F	ISO 6162 - DN64 Split Flange SAE Size 40 (2.50") Flange

Thread Type

Omit	Inch threads / ports
M	Metric threads / ports

Daman Products Company, Inc. • 1811 North Home Street • Mishawaka, IN 46545-7267
Tel: 800.959.7841 574.259.7841 • Fax: 800.241.7664 • Email: sales@daman.com • www.daman.com

40mm Body • XA Circuit

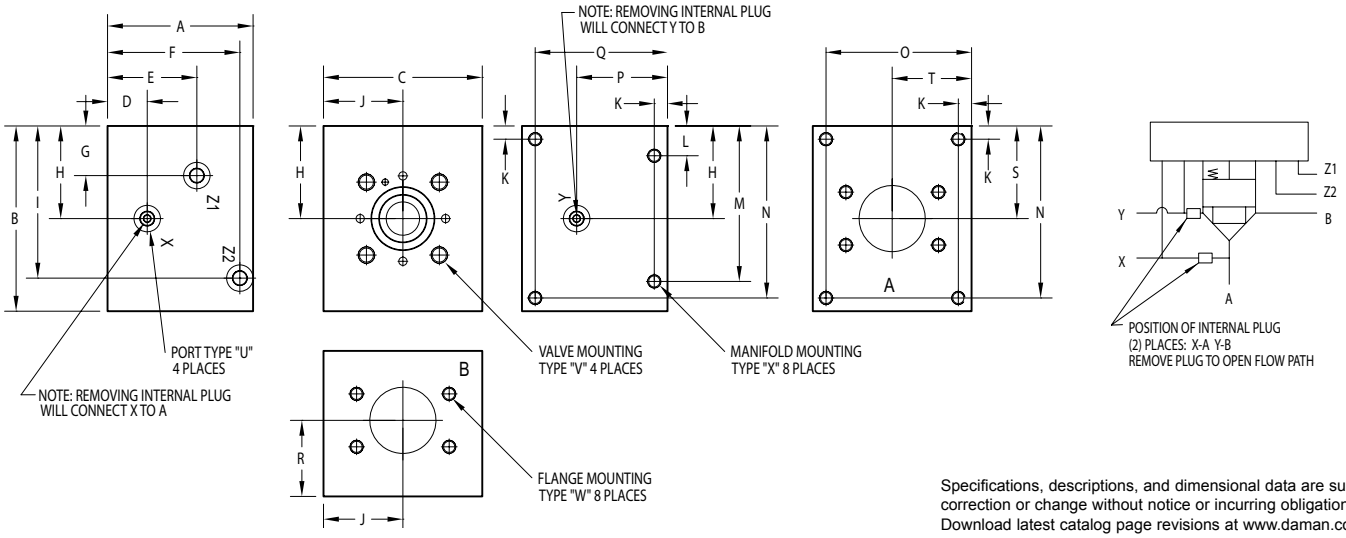

Specifications, descriptions, and dimensional data are subject to correction or change without notice or incurring obligation. Download latest catalog page revisions at www.daman.com.

PART NO.	A	B	C	D	E	F	G	H	I	J	K	L	M	N	O	P
*40XA32F61 *40XA32F61M	6.00 [152.4]	7.00 [177.8]	6.00 [152.4]	1.25 [31.8]	3.50 [88.9]	5.50 [139.7]	1.28 [32.5]	3.25 [82.6]	6.00 [152.4]	3.00 [76.2]	0.50 [12.7]	1.13 [28.6]	5.88 [149.2]	6.50 [165.1]	5.50 [139.7]	3.46 [87.9]
*40XB32F61 *40XB32F61M	6.00 [152.4]	7.00 [177.8]	6.00 [152.4]	3.46 [87.9]	--	5.50 [139.7]	1.25 [31.8]	3.25 [82.6]	6.00 [152.4]	3.00 [76.2]	0.50 [12.7]	1.13 [28.6]	5.88 [149.2]	6.50 [165.1]	5.50 [139.7]	3.46 [87.9]
D40XA32F62 D40XA32F62M	6.00 [152.4]	7.00 [177.8]	6.00 [152.4]	1.25 [31.8]	3.50 [88.9]	5.50 [139.7]	1.16 [29.4]	3.13 [79.8]	5.88 [149.2]	3.00 [76.2]	0.50 [12.7]	1.13 [28.6]	5.88 [149.2]	6.50 [165.1]	5.50 [139.7]	3.46 [87.9]
D40XB32F62 D40XB32F62M	6.00 [152.4]	7.00 [177.8]	6.00 [152.4]	3.46 [87.9]	--	5.50 [139.7]	1.25 [31.8]	3.13 [79.8]	5.88 [149.2]	3.00 [76.2]	0.50 [12.7]	1.13 [28.6]	5.88 [149.2]	6.50 [165.1]	5.50 [139.7]	3.46 [87.9]
*40XA48F61 *40XA48F61M	6.00 [152.4]	7.50 [190.5]	6.00 [152.4]	1.25 [31.8]	3.50 [88.9]	5.50 [139.7]	1.78 [45.2]	3.75 [95.3]	6.50 [165.1]	3.00 [76.2]	0.50 [12.7]	1.13 [28.6]	6.38 [161.9]	7.00 [177.8]	5.50 [139.7]	3.46 [87.9]
*40XB48F61 *40XB48F61M	6.00 [152.4]	7.50 [190.5]	6.00 [152.4]	3.46 [87.9]	--	5.50 [139.7]	1.25 [31.8]	3.75 [95.3]	6.50 [165.1]	3.00 [76.2]	0.50 [12.7]	1.13 [28.6]	6.38 [161.9]	7.00 [177.8]	5.50 [139.7]	3.46 [87.9]
D40XA48F62 D40XA48F62M	7.50 [190.5]	9.50 [241.3]	9.00 [228.6]	2.75 [69.9]	5.00 [127.0]	7.00 [177.8]	2.78 [70.6]	4.75 [120.7]	7.50 [190.5]	4.50 [114.3]	0.75 [19.1]	1.63 [41.3]	7.88 [200.0]	8.75 [222.3]	8.25 [209.6]	4.96 [126.0]
D40XB48F62 D40XB48F62M	7.50 [190.5]	9.50 [241.3]	9.00 [228.6]	4.96 [126.0]	--	7.00 [177.8]	2.75 [69.9]	4.75 [120.7]	7.50 [190.5]	4.50 [114.3]	0.75 [19.1]	1.63 [41.3]	7.88 [200.0]	8.75 [222.3]	8.25 [209.6]	4.96 [126.0]

PART NO.	Q	R	S	T	U pilot port size	V valve mounting	W flange mounting	X manifold mounting
*40XA32F61 *40XA32F61M	5.50 [139.7]	3.46 [87.9]	3.25 [82.6]	3.00 [76.2]	SAE #6 ISO 6149 M14	0.75 UNC x 1.62 DP M20 ISO 6H x 41 DP	0.50 UNC x 1.19 DP M12 ISO 6H x 30 DP	0.50 UNC x 1.00 DP M12 ISO 6H x 25 DP
*40XB32F61 *40XB32F61M	5.50 [139.7]	3.46 [87.9]	3.25 [82.6]	3.00 [76.2]	SAE #6 ISO 6149 M14	0.75 UNC x 1.62 DP M20 ISO 6H x 41 DP	0.50 UNC x 1.19 DP M12 ISO 6H x 30 DP	0.50 UNC x 1.00 DP M12 ISO 6H x 25 DP
D40XA32F62 D40XA32F62M	5.50 [139.7]	3.46 [87.9]	3.13 [79.4]	3.00 [76.2]	SAE #6 ISO 6149 M14	0.75 UNC x 1.62 DP M20 ISO 6H x 41 DP	0.75 UNC x 1.50 DP M20 ISO 6H x 38 DP	0.50 UNC x 1.00 DP M12 ISO 6H x 25 DP
D40XB32F62 D40XB32F62M	5.50 [139.7]	3.46 [87.9]	3.13 [79.4]	3.00 [76.2]	SAE #6 ISO 6149 M14	0.75 UNC x 1.62 DP M20 ISO 6H x 41 DP	0.75 UNC x 1.50 DP M20 ISO 6H x 38 DP	0.50 UNC x 1.00 DP M12 ISO 6H x 25 DP
*40XA48F61 *40XA48F61M	5.50 [139.7]	3.00 [76.2]	3.75 [95.3]	3.00 [76.2]	SAE #6 ISO 6149 M14	0.75 UNC x 1.62 DP M20 ISO 6H x 41 DP	0.63 UNC x 1.44 DP M16 ISO 6H x 36 DP	0.50 UNC x 1.00 DP M12 ISO 6H x 25 DP
*40XB48F61 *40XB48F61M	5.50 [139.7]	3.00 [76.2]	3.75 [95.3]	3.00 [76.2]	SAE #6 ISO 6149 M14	0.75 UNC x 1.62 DP M20 ISO 6H x 41 DP	0.63 UNC x 1.44 DP M16 ISO 6H x 36 DP	0.50 UNC x 1.00 DP M12 ISO 6H x 25 DP
D40XA48F62 D40XA48F62M	6.75 [171.5]	3.75 [95.3]	4.75 [120.7]	4.50 [114.3]	SAE #6 ISO 6149 M14	0.75 UNC x 1.62 DP M20 ISO 6H x 41 DP	1.13 UNC x 2.39 DP M30 ISO 6H x 63 DP	0.75 UNC x 1.62 DP M20 ISO 6H x 41 DP
D40XB48F62 D40XB48F62M	6.75 [171.5]	3.75 [95.3]	4.75 [120.7]	4.50 [114.3]	SAE #6 ISO 6149 M14	0.75 UNC x 1.62 DP M20 ISO 6H x 41 DP	1.13 UNC x 2.39 DP M30 ISO 6H x 63 DP	0.75 UNC x 1.62 DP M20 ISO 6H x 41 DP

Daman Products Company, Inc. • 1811 North Home Street • Mishawaka, IN 46545-7267
Tel: 800.959.7841 574.259.7841 • Fax: 800.241.7664 • Email: sales@daman.com • www.daman.com

Daman®

40mm Body • XB Circuit

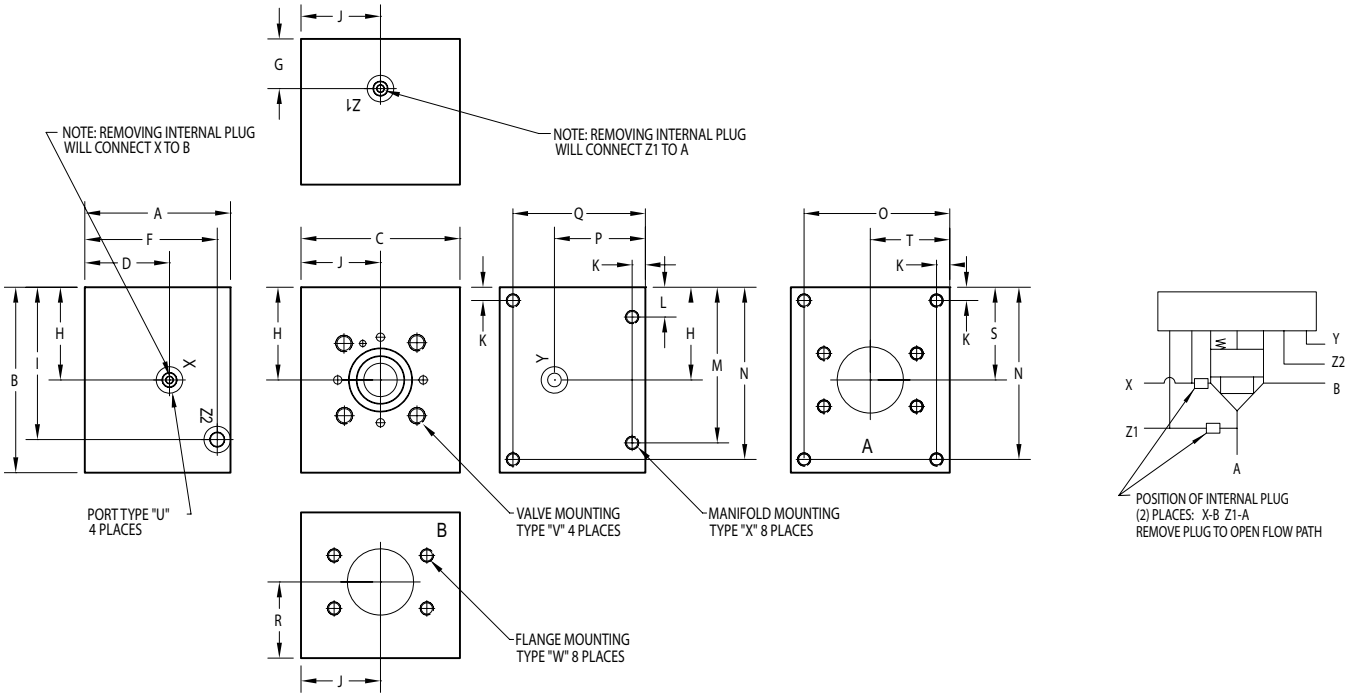

Specifications, descriptions, and dimensional data are subject to correction or change without notice or incurring obligation. Download latest catalog page revisions at www.daman.com.

Ordering Information

For **coating options** see pages 245-246.

Material	Valve Cavity	Pilot Circuit	A & B Port Size	Flange Rating	Thread Type

Material

A	Aluminum - 6061-T6 3000† psi • 20.7 MPa
D	Ductile Iron - D4512 5000† psi • 34.5 MPa

† Working pressure should be considered in accordance with ISO 4413 to determine appropriate material type.

Pilot Circuit

XA	X common to A Y common to B
XB	X common to B Z1 common to A

These connections are furnished plugged (external pilot ports). Remove plugs for internal pilot ports. See circuit diagram.

Flange Rating

Aluminum or Ductile	
61	ISO 6162 - 2.5 to 35 MPa SAE code 61
Ductile only	
62	ISO 6162 - 40 MPa series SAE code 62

Valve Cavity

40	DIN 24342 - 40mm ISO 7368-10-07 (Standard currently under revision) NFPA T3.5.45-BD-10-2-A

A & B Port Size

32F	ISO 6162 - DN51 Split Flange SAE Size 32 (2.00") Flange
48F	ISO 6162 - DN76 Split Flange SAE Size 48 (3.00") Flange

Thread Type

Omit	Inch threads / ports
M	Metric threads / ports

Daman Products Company, Inc. • 1811 North Home Street • Mishawaka, IN 46545-7267
Tel: 800.959.7841 574.259.7841 • Fax: 800.241.7664 • Email: sales@daman.com • www.daman.com

50mm Body • XA Circuit

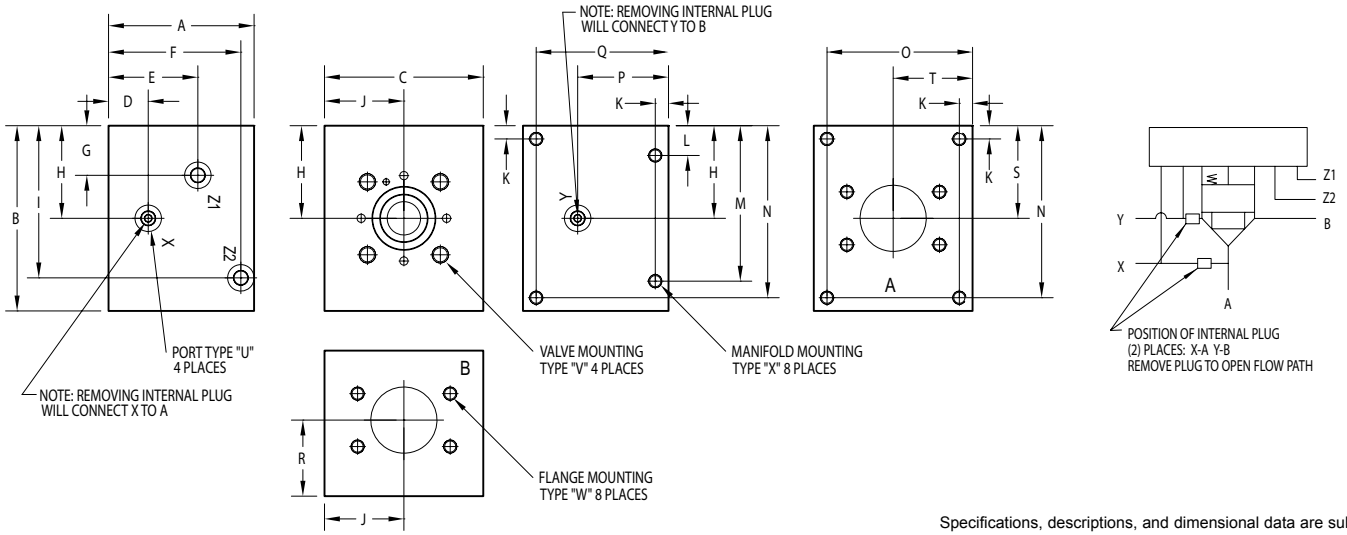

Specifications, descriptions, and dimensional data are subject to correction or change without notice or incurring obligation. Download latest catalog page revisions at www.daman.com.

PART NO.	A	B	C	D	E	F	G	H	I	J	K	L	M	N	O	P
50XA40F61	7.00 [177.8]	7.00 [177.8]	6.00 [152.4]	1.50 [38.1]	4.50 [114.3]	6.50 [165.1]	0.75 [19.1]	3.25 [82.6]	6.13 [155.6]	3.00 [76.2]	0.50 [12.7]	1.13 [28.6]	5.88 [149.2]	6.50 [165.1]	5.50 [139.7]	4.15 [105.3]
50XB40F61	7.00 [177.8]	7.00 [177.8]	6.00 [152.4]	4.15 [105.3]	--	6.50 [165.1]	1.50 [38.1]	3.25 [82.6]	6.13 [155.6]	3.00 [76.2]	0.50 [12.7]	1.13 [28.6]	5.88 [149.2]	6.50 [165.1]	5.50 [139.7]	4.15 [105.3]
D50XA40F62*	7.00 [177.8]	8.00 [203.2]	7.00 [177.8]	1.50 [38.1]	4.50 [114.3]	6.50 [165.1]	1.25 [31.8]	3.75 [95.3]	6.62 [168.3]	3.50 [88.9]	0.50 [12.7]	1.13 [28.6]	6.88 [174.6]	7.50 [190.5]	6.50 [165.1]	4.15 [105.3]
D50XB40F62*	7.00 [177.8]	8.00 [203.2]	7.00 [177.8]	4.15 [105.3]	--	6.50 [165.1]	1.50 [38.1]	3.75 [95.3]	6.62 [168.3]	3.50 [88.9]	0.50 [12.7]	1.13 [28.6]	6.88 [174.6]	7.50 [190.5]	6.50 [165.1]	4.15 [105.3]
50XA64F61	7.00 [177.8]	7.25 [184.2]	6.50 [165.1]	1.50 [38.1]	4.15 [105.4]	6.50 [165.1]	1.19 [30.2]	3.50 [88.9]	6.38 [161.9]	3.25 [82.6]	0.50 [12.7]	1.13 [28.6]	6.13 [155.6]	6.75 [171.5]	6.00 [152.4]	4.15 [105.3]
50XB64F61	7.00 [177.8]	7.25 [184.2]	6.50 [165.1]	4.15 [105.3]	--	6.50 [165.1]	1.50 [38.1]	3.50 [88.9]	6.38 [161.9]	3.25 [82.6]	0.50 [12.7]	1.13 [28.6]	6.13 [155.6]	6.75 [171.5]	6.00 [152.4]	4.15 [105.3]

PART NO.	Q	R	S	T	U pilot port size	V valve mounting	W flange mounting	X manifold mounting
*50XA40F61V *50XA40F61R *50XA40F61M	6.50 [165.1]	4.15 [105.3]	3.25 [82.6]	3.00 [76.2]	SAE #6 SAE #6 ISO 6149 M14	0.75 UNC x 1.62 DP 0.88 UNC x 1.62 DP M20 ISO 6H x 41 DP	0.50 UNC x 1.19 DP 0.50 UNC x 1.19 DP M12 ISO 6H x 30 DP	0.50 UNC x 1.00 DP 0.50 UNC x 1.00 DP M12 ISO 6H x 25 DP
*50XB40F61V *50XB40F61R *50XB40F61M	6.50 [165.1]	4.15 [105.3]	3.25 [82.6]	3.00 [76.2]	SAE #6 SAE #6 ISO 6149 M14	0.75 UNC x 1.62 DP 0.88 UNC x 1.62 DP M20 ISO 6H x 41 DP	0.50 UNC x 1.19 DP 0.50 UNC x 1.19 DP M12 ISO 6H x 30 DP	0.50 UNC x 1.00 DP 0.50 UNC x 1.00 DP M12 ISO 6H x 25 DP
D50XA40F62V D50XA40F62R D50XA40F62M	6.50 [165.1]	4.00 [101.6]	3.75 [95.3]	3.50 [88.9]	SAE #6 SAE #6 ISO 6149 M14	0.75 UNC x 1.62 DP 0.88 UNC x 1.62 DP M20 ISO 6H x 41 DP	0.88 UNC x 1.75 DP 0.88 UNC x 1.75 DP M24 ISO 6H x 45 DP	0.50 UNC x 1.00 DP 0.50 UNC x 1.00 DP M12 ISO 6H x 25 DP
D50XB40F62V D50XB40F62R D50XB40F62M	6.50 [165.1]	4.00 [101.6]	3.75 [95.3]	3.50 [88.9]	SAE #6 SAE #6 ISO 6149 M14	0.75 UNC x 1.62 DP 0.88 UNC x 1.62 DP M20 ISO 6H x 41 DP	0.88 UNC x 1.75 DP 0.88 UNC x 1.75 DP M24 ISO 6H x 45 DP	0.50 UNC x 1.00 DP 0.50 UNC x 1.00 DP M12 ISO 6H x 25 DP
*50XA64F61V *50XA64F61R *50XA64F61M	6.50 [165.1]	3.88 [98.4]	3.50 [88.9]	3.25 [82.6]	SAE #6 SAE #6 ISO 6149 M14	0.75 UNC x 1.62 DP 0.88 UNC x 1.62 DP M20 ISO 6H x 41 DP	0.63 UNC x 1.44 DP 0.63 UNC x 1.44 DP M16 ISO 6H x 36 DP	0.50 UNC x 1.19 DP 0.50 UNC x 1.19 DP M12 ISO 6H x 30 DP
*50XB64F61V *50XB64F61R *50XB64F61M	6.50 [165.1]	3.88 [98.4]	3.50 [88.9]	3.25 [82.6]	SAE #6 SAE #6 ISO 6149 M14	0.75 UNC x 1.62 DP 0.88 UNC x 1.62 DP M20 ISO 6H x 41 DP	0.63 UNC x 1.44 DP 0.63 UNC x 1.44 DP M16 ISO 6H x 36 DP	0.50 UNC x 1.19 DP 0.50 UNC x 1.19 DP M12 ISO 6H x 30 DP

Daman Products Company, Inc. • 1811 North Home Street • Mishawaka, IN 46545-7267
Tel: 800.959.7841 574.259.7841 • Fax: 800.241.7664 • Email: sales@daman.com • www.daman.com

Daman®

50mm Body • XB Circuit

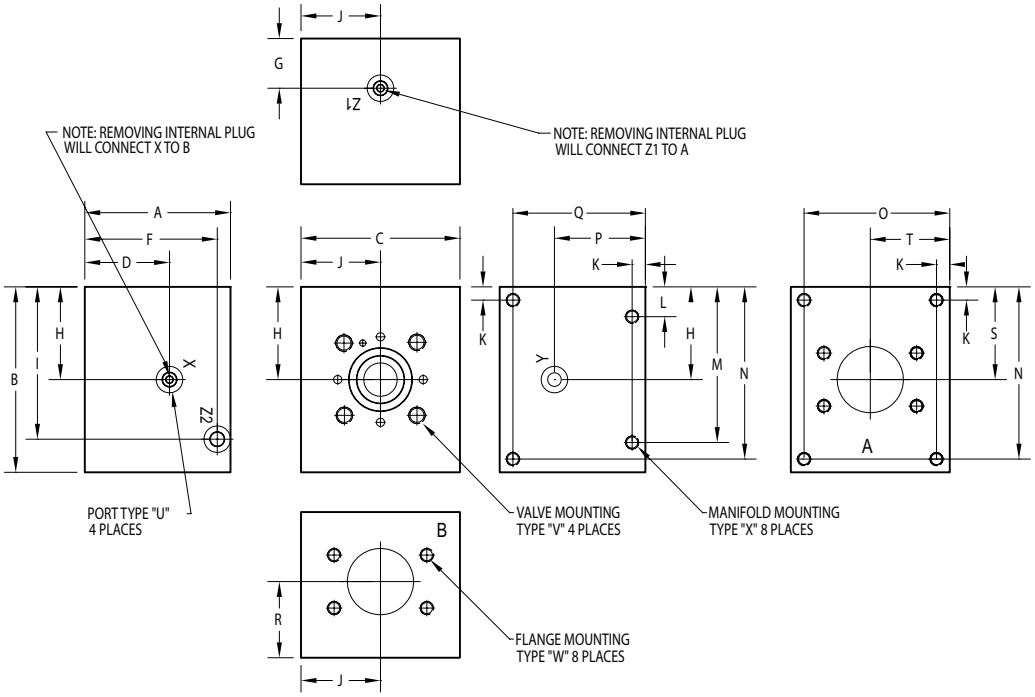

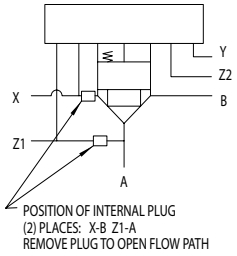

Specifications, descriptions, and dimensional data are subject to correction or change without notice or incurring obligation. Download latest catalog page revisions at www.daman.com.

Ordering Information

For **coating options** see pages 245-246.

Material	Valve Cavity	Pilot Circuit	A & B Port Size	Flange Rating	Thread Type

Material

A	Aluminum - 6061-T6 3000† psi • 20.7 MPa
D	Ductile Iron - D4512 5000† psi • 34.5 MPa

† Working pressure should be considered in accordance with ISO 4413 to determine appropriate material type.

Pilot Circuit

XA	X common to A Y common to B
XB	X common to B Z1 common to A

These connections are furnished plugged (external pilot ports). Remove plugs for internal pilot ports. See circuit diagram.

Flange Rating

Aluminum or Ductile	
61	ISO 6162 - 2.5 to 35 MPa SAE code 61
Port size 40F, Ductile only	
62	ISO 6162 - 40 MPa series SAE code 62

Valve Cavity

50	DIN 24342 - 50mm ISO 7368-11-09 (Standard currently under revision) NFPA T3.5.45-BE-11-2-A

A & B Port Size

40F	ISO 6162 - DN64 Split Flange SAE Size 40 (2.50") Flange
64F	ISO 6162 - DN102 Split Flange SAE Size 64 (4.00") Flange

Thread Type

V	Inch threads / ports Valve mtg. = 0.75-10
R	Inch threads / ports Valve mtg. = 0.875-9
M	Metric threads / ports Valve mtg. = M20-2.5

Daman Products Company, Inc. • 1811 North Home Street • Mishawaka, IN 46545-7267
Tel: 800.959.7841 574.259.7841 • Fax: 800.241.7664 • Email: sales@daman.com • www.daman.com

63mm Body • XA Circuit

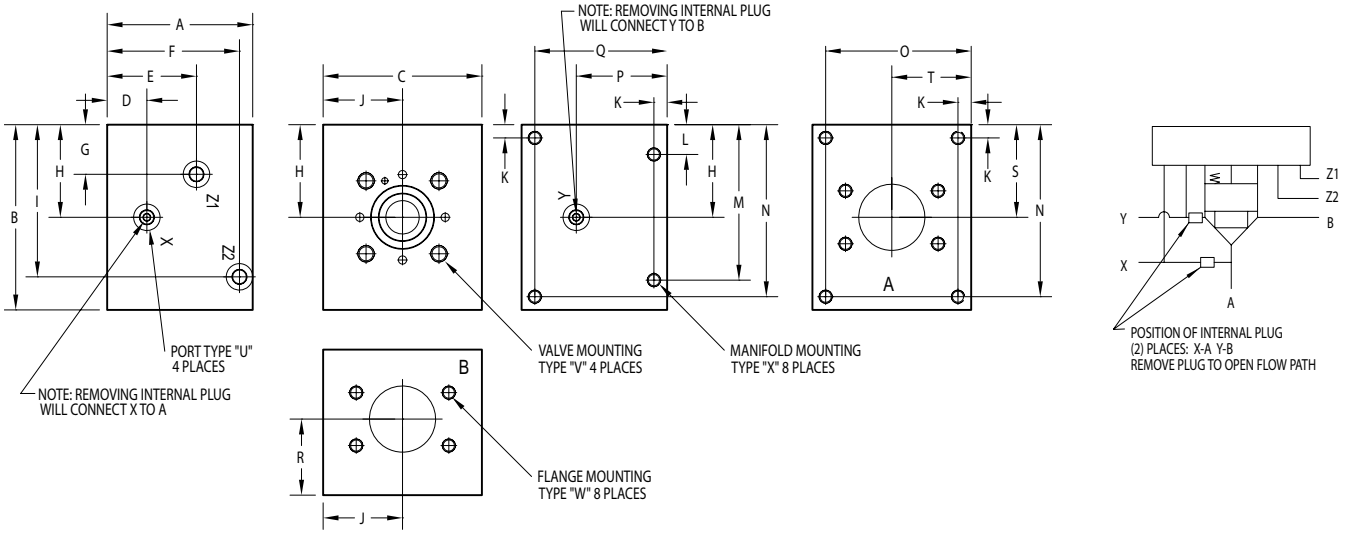

Specifications, descriptions, and dimensional data are subject to correction or change without notice or incurring obligation. Download latest catalog page revisions at www.daman.com.

PART NO.	A	B	C	D	E	F	G	H	I	J	K	L	M	N	O	P
*63XA48F61 *63XA48F61M	8.00 [203.2]	9.00 [228.6]	8.00 [203.2]	1.00 [25.4]	4.24 [107.7]	7.25 [184.2]	1.29 [32.8]	4.25 [108.0]	8.00 [203.2]	4.00 [101.6]	0.63 [15.9]	1.38 [34.9]	7.63 [193.7]	8.38 [212.7]	7.38 [187.3]	4.24 [107.7]
*63XB48F61 *63XB48F61M	8.00 [203.2]	9.00 [228.6]	8.00 [203.2]	4.24 [107.7]	--	7.25 [184.2]	1.25 [31.8]	4.25 [108.0]	8.00 [203.2]	4.00 [101.6]	0.63 [15.9]	1.38 [34.9]	7.63 [193.7]	8.38 [212.7]	7.38 [187.3]	4.24 [107.7]
D63XA48F62 D63XA48F62M	9.00 [228.6]	10.50 [266.7]	9.00 [228.6]	2.25 [57.2]	5.00 [127.0]	8.25 [209.6]	1.77 [45.0]	4.75 [120.7]	8.50 [215.9]	4.50 [114.3]	0.63 [15.9]	1.38 [34.9]	9.13 [231.8]	9.88 [250.8]	8.38 [212.7]	5.24 [133.1]
D63XB48F62 D63XB48F62M	9.00 [228.6]	10.50 [266.7]	9.00 [228.6]	5.24 [133.1]	--	8.25 [209.6]	2.25 [57.2]	4.75 [120.7]	8.50 [215.9]	4.50 [114.3]	0.63 [15.9]	1.38 [34.9]	9.13 [231.8]	9.88 [250.8]	8.38 [212.7]	5.24 [133.1]
*63XA80F61 *63XA80F61M	8.00 [203.2]	9.00 [228.6]	8.00 [203.2]	1.38 [34.9]	4.24 [107.7]	7.25 [184.2]	1.29 [32.8]	4.25 [108.0]	8.00 [203.2]	4.00 [101.6]	0.63 [15.9]	1.50 [38.1]	7.50 [190.5]	8.38 [212.7]	7.38 [187.3]	4.24 [107.7]
*63XB80F61 *63XB80F61M	8.00 [203.2]	9.00 [228.6]	8.00 [203.2]	4.24 [107.7]	--	7.25 [184.2]	1.38 [34.9]	4.25 [108.0]	8.00 [203.2]	4.00 [101.6]	0.63 [15.9]	1.50 [38.1]	7.50 [190.5]	8.38 [212.7]	7.38 [187.3]	4.24 [107.7]

PART NO.	Q	R	S	T	U pilot port size	V valve mounting	W flange mounting	X manifold mounting
*63XA48F61 *63XA48F61M	7.38 [187.3]	4.24 [107.7]	4.25 [108.0]	4.00 [101.6]	SAE #08 ISO 6149 M18	1.25 UNC x 2.75 DP M30 ISO 6H x 70 DP	0.63 UNC x 1.31 DP M16 ISO 6H x 33 DP	0.63 UNC x 1.25 DP M16 ISO 6H x 32 DP
*63XB48F61 *63XB48F61M	7.38 [187.3]	4.24 [107.7]	4.25 [108.0]	4.00 [101.6]	SAE #08 ISO 6149 M18	1.25 UNC x 2.75 DP M30 ISO 6H x 70 DP	0.63 UNC x 1.31 DP M16 ISO 6H x 33 DP	0.63 UNC x 1.25 DP M16 ISO 6H x 32 DP
D63XA48F62 D63XA48F62M	8.38 [212.7]	5.24 [133.1]	4.75 [120.7]	4.50 [114.3]	SAE #08 ISO 6149 M18	1.25 UNC x 2.75 DP M30 ISO 6H x 70 DP	1.13 UNC x 2.25 DP M30 ISO 6H x 57 DP	0.63 UNC x 1.25 DP M16 ISO 6H x 32 DP
D63XB48F62 D63XB48F62M	8.38 [212.7]	5.24 [133.1]	4.75 [120.7]	4.50 [114.3]	SAE #08 ISO 6149 M18	1.25 UNC x 2.75 DP M30 ISO 6H x 70 DP	1.13 UNC x 2.25 DP M30 ISO 6H x 57 DP	0.63 UNC x 1.25 DP M16 ISO 6H x 32 DP
*63XA80F61 *63XA80F61M	7.38 [187.3]	4.24 [107.7]	4.25 [108.0]	4.00 [101.6]	SAE #08 ISO 6149 M18	1.25 UNC x 2.75 DP M30 ISO 6H x 70 DP	0.63 UNC x 1.44 DP M16 ISO 6H x 36 DP	0.63 UNC x 1.44 DP M16 ISO 6H x 36 DP
*63XB80F61 *63XB80F61M	7.38 [187.3]	4.24 [107.7]	4.25 [108.0]	4.00 [101.6]	SAE #08 ISO 6149 M18	1.25 UNC x 2.75 DP M30 ISO 6H x 70 DP	0.63 UNC x 1.44 DP M16 ISO 6H x 36 DP	0.63 UNC x 1.44 DP M16 ISO 6H x 36 DP

Daman Products Company, Inc. • 1811 North Home Street • Mishawaka, IN 46545-7267
Tel: 800.959.7841 574.259.7841 • Fax: 800.241.7664 • Email: sales@daman.com • www.daman.com

Daman®

63mm Body • XB Circuit

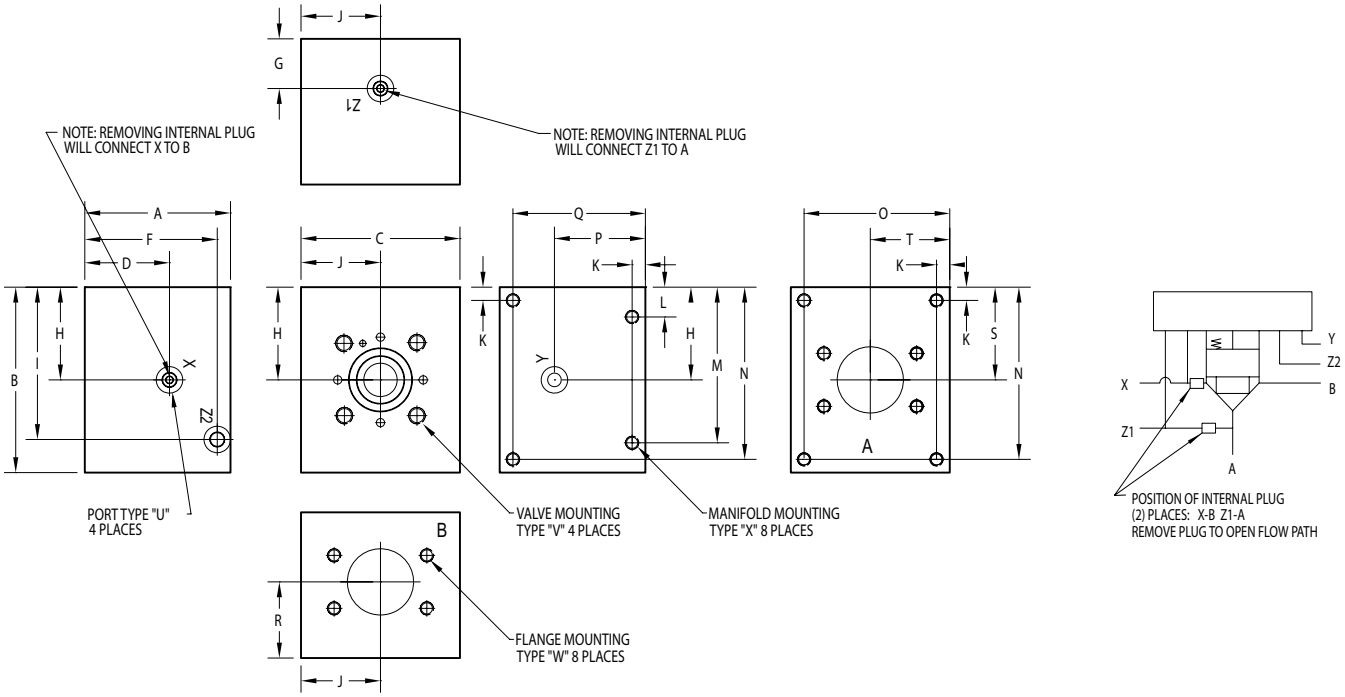

Specifications, descriptions, and dimensional data are subject to correction or change without notice or incurring obligation. Download latest catalog page revisions at www.daman.com.

Ordering Information

For **coating options** see pages 245-246.

Material	Valve Cavity	Pilot Circuit	A & B Port Size	Flange Rating	Thread Type

Material

A	Aluminum - 6061-T6 3000† psi • 20.7 MPa
D	Ductile Iron - D4512 5000† psi • 34.5 MPa

† Working pressure should be considered in accordance with ISO 4413 to determine appropriate material type.

Pilot Circuit

XA	X common to A Y common to B
XB	X common to B Z1 common to A

These connections are furnished plugged (external pilot ports). Remove plugs for internal pilot ports. See circuit diagram.

Flange Rating

Aluminum or Ductile	
61	ISO 6162 - 2.5 to 35 MPa SAE code 61
Port size 48F, Ductile only	
62	ISO 6162 - 40 MPa series SAE code 62

Valve Cavity

63	DIN 24342 - 63mm ISO 7368-12-11 (Standard currently under revision) NFPA T3.5.45-BF-12-2-A

A & B Port Size

48F	ISO 6162 - DN76 Split Flange SAE Size 48 (3.00") Flange
80F	ISO 6162 - DN127 Split Flange SAE Size 80 (5.00") Flange

Thread Type

Omit	Inch threads / ports
M	Metric threads / ports

Daman Products Company, Inc. • 1811 North Home Street • Mishawaka, IN 46545-7267
Tel: 800.959.7841 574.259.7841 • Fax: 800.241.7664 • Email: sales@daman.com • www.daman.com

Sun and Common Cavity Bodies

The following pages represent our product offering for cavity bodies for screw-in cartridge valves.

Our comprehensive, new Aluminum and Ductile cavity body line is comprised of 34 different cavity sizes which include six common cavity sizes from C-8-2 through C-16-3 along with 28 of the most popular sizes from Sun, each having the following five port types available:

SAE
NPTF
BSPP
BSPT
ISO 6149

- Three to five different port size options will be offered for each port type.
- Our entire line can be manufactured in aluminum or ductile iron, with or without gauge ports, with or without surface coatings — clear or black anodize for aluminum and electroless nickel for ductile.
- Each part will have two through mounting holes and ship with two bolts.
- For convenience, our new cavity bodies can face left or right while still being able to read the part number when mounted.
- The Sun stainless bodies are made from 17-4 H1150 stainless providing corrosion resistance similar to 304 stainless, along with very high tensile strength allowing a 5000 psi pressure rating.
- We also sell Sun valves. See p. 227 for our stocked selection, or call for other part numbers.
- Dimensioning charts are at the end of each section.

Return to this section regularly as we expand our cavity body offerings.

Daman Products Company, Inc. • 1811 North Home Street • Mishawaka, IN 46545-7267
Tel: 800.959.7841 574.259.7841 • Fax: 800.241.7664 • Email: sales@daman.com • www.daman.com

Sun Cavity Bodies - 17-4 H1150 Stainless Steel

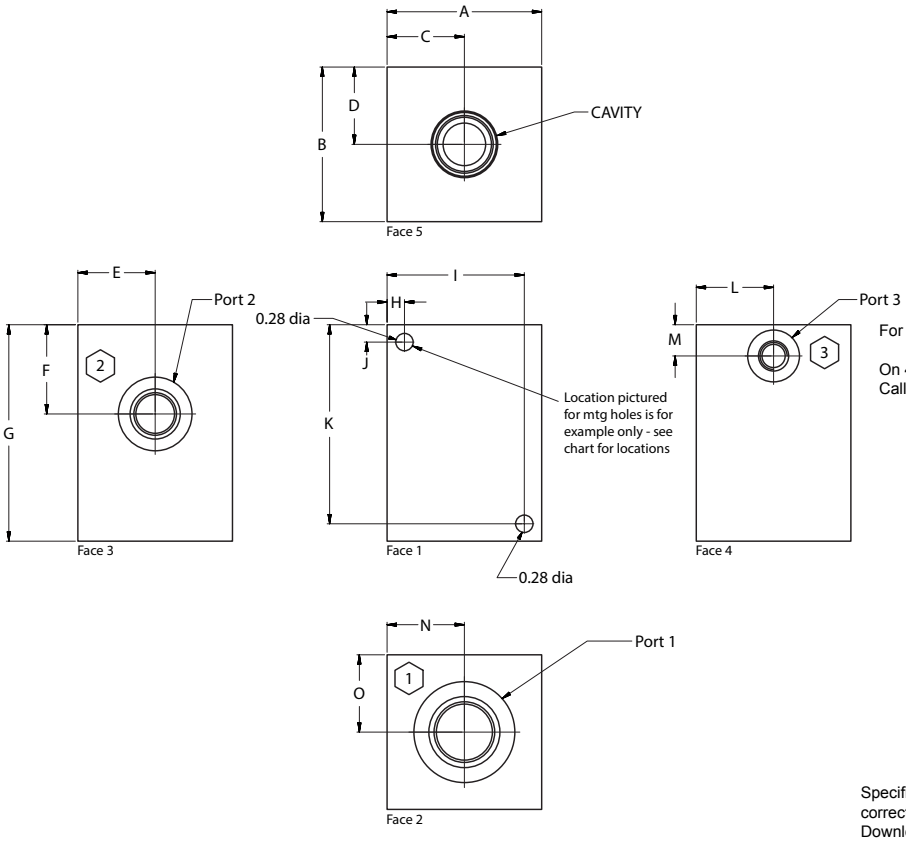

For T19A, T24A and T34A, Port 3 is on Face 3.

On 4-port cavities, Port 4 is on Face 3.
Call factory for locations.

Specifications, descriptions, and dimensional data are subject to correction or change without notice or incurring obligation. Download latest catalog page revisions at www.daman.com.

Ordering Information

Material	Sun Cavity Size	Product Type	Port Size	Port Threads

Daman can sell Sun valves. See page 227 for stocked valves, or consult factory for price and delivery of valves not shown.

Material	
S*	Stainless Steel - 17-4 5000† psi • 34.5 MPa

† Working pressure should be considered in accordance with ISO 4413 to determine appropriate material type.

*Mounting hardware not supplied for stainless steel products. All SS products are passivated.

Sun Cavity Size		
T2A	**T16A**	**T23A**
T3A	**T17A**	**T24A**
T5A	**T18A**	**T32A**
T10A	**T19A**	**T34A**
T11A	**T21A**	**T162A**
T13A	**T22A**	**T163A**

Product Type	
CB	Cavity Bodies

Size of Port 1	
6	3/8 inch (-6) Hose/Fitting size
8	1/2 inch (-8) Hose/Fitting size
10	5/8 inch (-10) Hose/Fitting size
12	3/4 inch (-12) Hose/Fitting size
16	1 inch (-16) Hose/Fitting size
20	1-1/4 inch (-20) Hose/Fitting size

Consult chart for port size availability with each cavity size, and for additional port sizes.

Port Threads	
P	NPTF ANSI B1.20.3
S	SAE ISO 11926; SAE 1926

Note: Pipe ports in stainless can gall.

Daman Products Company, Inc. • 1811 North Home Street • Mishawaka, IN 46545-7267
Tel: 800.959.7841 574.259.7841 • Fax: 800.241.7664 • Email: sales@daman.com • www.daman.com

Sun Cavity Bodies - 17-4 H1150 Stainless Steel

Part Number	A	B	C	D	E	F	G	H	I	J	K	L	M	N	O	Port 1	Port 2	Port 3	Port 4
ST2ACB6P	2.50	2.50	1.31	1.25	1.25	1.44	3.50	0.28	2.22	0.28	3.22	1.25	0.51	1.31	1.25	3/8	3/8	1/8	-
ST2ACB8S	2.50	2.50	1.31	1.25	1.25	1.44	3.50	0.28	2.22	0.28	3.22	1.25	0.51	1.31	1.25	-08	-08	-04	-
ST3ACB12P	3.00	3.00	1.56	1.50	1.50	1.01	3.50	2.72	0.28	0.28	3.22	-	-	1.56	1.50	3/4	3/4	-	-
ST3ACB16S	3.00	3.00	1.56	1.50	1.50	1.01	3.50	2.72	0.28	0.28	3.22	-	-	1.56	1.50	-16	-16	-	-
ST5ACB12P	3.00	3.00	1.56	1.50	1.50	0.88	3.00	2.72	0.28	0.28	2.72	-	-	1.56	1.50	3/4	3/4	-	-
ST5ACB12S	3.00	3.00	1.56	1.50	1.50	0.88	3.00	2.72	0.28	0.28	2.72	-	-	1.56	1.50	-12	-12	-	-
ST10ACB12P	2.50	2.50	1.44	1.25	1.25	0.85	3.00	2.22	0.28	0.28	2.72	-	-	1.44	1.25	3/4	3/4	-	-
ST10ACB12S	2.50	2.50	1.44	1.25	1.25	0.85	3.00	2.22	0.28	0.28	2.72	-	-	1.44	1.25	-12	-12	-	-
ST11ACB6P	2.50	2.50	1.34	1.25	1.25	1.41	3.25	0.28	2.22	0.28	2.97	1.25	0.49	1.34	1.25	3/8	3/8	1/4	-
ST11ACB10S	2.50	2.50	1.34	1.25	1.25	1.41	3.25	0.28	2.22	0.28	2.97	1.25	0.49	1.34	1.25	-10	-10	-6	-
ST13ACB6P	2.50	2.50	1.25	1.25	1.25	0.76	2.50	2.22	0.28	0.28	2.22	-	-	1.25	1.25	3/8	3/8	-	-
ST13ACB8S	2.50	2.50	1.25	1.25	1.25	0.76	2.50	2.22	0.28	0.28	2.22	-	-	1.25	1.25	-08	-08	-	-
ST16ACB16P	3.50	3.50	1.75	1.75	1.75	1.35	4.00	3.22	0.28	0.28	3.72	-	-	1.75	1.75	1	1	-	-
ST16ACB16S	3.50	3.50	1.75	1.75	1.75	1.35	4.00	3.22	0.28	0.28	3.72	-	-	1.75	1.75	-16	-16	-	-
ST17ACB12P	3.50	3.50	1.88	1.75	1.75	1.91	4.25	0.28	3.22	0.28	3.97	1.75	0.60	1.88	1.75	3/4	3/4	3/8	-
ST17ACB16S	3.50	3.50	1.88	1.75	1.75	1.91	4.25	0.28	3.22	0.28	3.97	1.75	0.60	1.88	1.75	-16	-16	-08	-
ST18ACB20P	3.50	3.50	2.00	1.75	1.75	1.72	4.75	0.28	3.22	0.28	4.47	-	-	2.00	1.75	1 1/4	1 1/4	-	-
ST18ACB20S	3.50	3.50	2.00	1.75	1.75	1.72	4.75	0.28	3.22	0.28	4.47	-	-	2.00	1.75	-20	-20	-	-
ST19ACB16P	3.50	3.50	1.97	1.75	1.75	2.54	5.25	0.28	3.22	1.44	4.97	1.75	0.72	1.97	1.75	1	1	3/8	-
ST19ACB16S	3.50	3.50	1.97	1.75	1.75	2.54	5.25	0.28	3.22	1.44	4.97	1.75	0.72	1.97	1.75	-16	-16	-08	-
ST21ACB6P	2.50	2.50	1.25	1.25	1.25	1.91	3.63	2.22	0.28	0.28	3.34	1.25	1.01	1.25	1.25	3/8	3/8	1/4	1/8
ST21ACB8S	2.50	2.50	1.25	1.25	1.25	1.91	3.63	2.22	0.28	0.28	3.34	1.25	1.01	1.25	1.25	-08	-08	-04	-04
ST22ACB12P	3.00	3.00	1.63	1.50	1.5	2.04	4.13	2.72	0.28	0.28	3.84	1.50	1.10	1.63	1.50	3/4	3/4	1/4	1/4
ST22ACB12S	3.00	3.00	1.63	1.50	1.5	2.04	4.13	2.72	0.28	0.28	3.84	1.50	1.10	1.63	1.50	-12	-12	-04	-04
ST23ACB12P	3.50	3.50	1.84	1.75	1.75	2.63	5.00	3.22	0.28	0.28	4.72	1.75	1.35	1.84	1.75	3/4	3/4	3/8	3/8
ST23ACB16S	3.50	3.50	1.84	1.75	1.75	2.63	5.00	3.22	0.28	0.28	4.72	1.75	1.35	1.84	1.75	-12	-12	-08	-06
ST24ACB16P	3.50	3.50	1.97	1.75	1.75	3.38	6.00	0.28	3.22	2.38	5.72	2.78	1.60	1.97	1.75	1	1	1/2	3/8
ST24ACB16S	3.50	3.50	1.97	1.75	1.75	3.38	6.00	0.28	3.22	2.38	5.72	2.78	1.60	1.97	1.75	-16	-16	-08	-06
ST32ACB12P	3.00	3.00	1.56	1.50	1.50	2.97	5.50	2.72	0.28	0.28	5.22	1.50	2.02	1.56	1.5	3/4	1/2	3/8	3/4
ST32ACB12S	3.00	3.00	1.56	1.50	1.50	2.97	5.50	2.72	0.28	0.28	5.22	1.50	2.02	1.56	1.5	-12	-08	-08	-12
ST34ACB16P	3.50	3.50	2.06	1.75	0.89	4.54	8.00	0.28	3.22	0.28	7.72	2.63	3.04	2.06	1.75	1	3/4	3/4	1
ST34ACB16S	3.50	3.50	2.06	1.75	0.89	4.54	8.00	0.28	3.22	0.28	7.72	2.63	3.04	2.06	1.75	-16	-12	-12	-16
ST162ACB6P	1.75	1.75	1.16	0.88	0.88	0.68	2.25	0.28	-	1.97	-	-	-	1.13	0.88	3/8	3/8	-	-
ST162ACB8S	1.75	1.75	1.16	0.88	0.88	0.68	2.25	0.28	-	1.97	-	-	-	1.13	0.88	-08	-08	-	-
ST163ACB6P	2.50	2.50	1.25	1.25	1.25	1.26	3.00	0.28	2.22	0.28	2.72	1.25	0.43	1.25	1.25	3/8	3/8	1/4	-
ST163ACB8S	2.50	2.50	1.25	1.25	1.25	1.26	3.00	0.28	2.22	0.28	2.72	1.25	0.43	1.25	1.25	-08	-08	-04	-

Specifications, descriptions, and dimensional data are subject to correction or change without notice or incurring obligation.
Download latest catalog page revisions at www.daman.com.

Daman Products Company, Inc. • 1811 North Home Street • Mishawaka, IN 46545-7267
Tel: 800.959.7841 574.259.7841 • Fax: 800.241.7664 • Email: sales@daman.com • www.daman.com

Sun Cavity Bodies - Aluminum & Ductile Iron

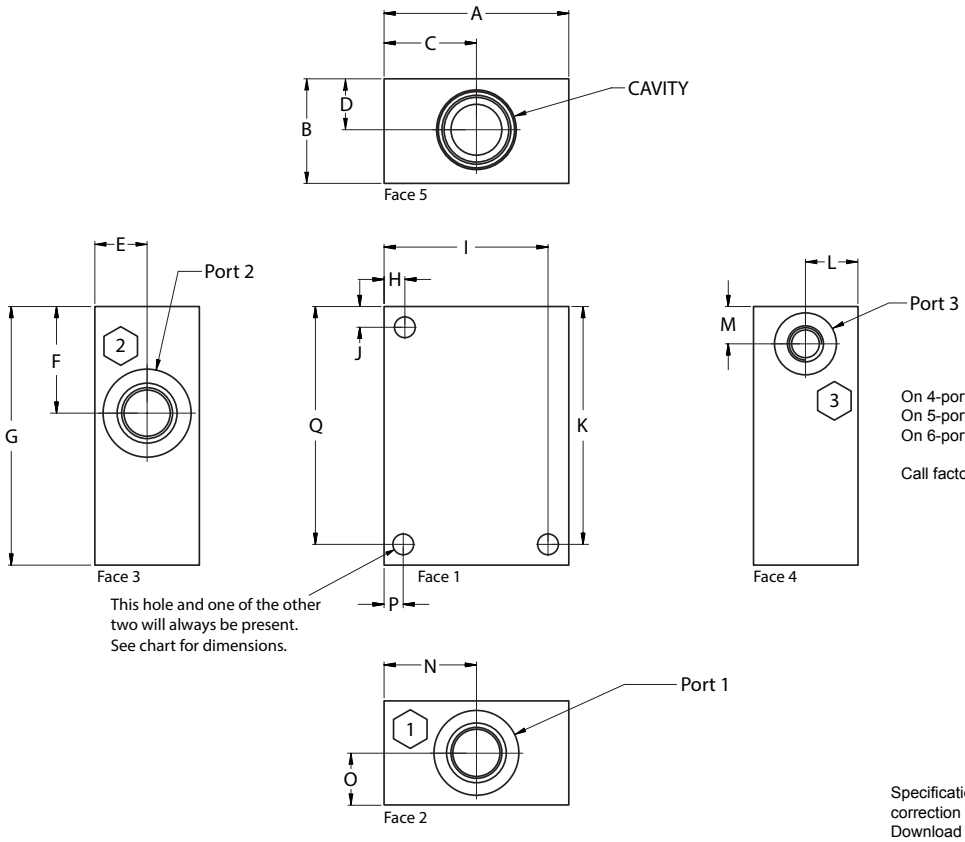

On 4-port cavities, Port 4 is on Face 3.
On 5-port cavities, Port 5 is on Face 4.
On 6-port cavities, Port 6 is on Face 3.

Call factory for locations.

Mounting hardware for Sun cavity bodies (Aluminum or Ductile) is available on page 197.15.

Specifications, descriptions, and dimensional data are subject to correction or change without notice or incurring obligation. Download latest catalog page revisions at www.daman.com.

Ordering Information

Daman can sell Sun valves. See page 227 for stocked valves, or consult factory for price and delivery of valves not shown.

For **coating options** see pages 245-246.

For Sun cavity bodies with gauge port options, see pp. 197.8 -197.10.

Material	Sun Cavity Size	Product Type	Port Size	Port Threads

Material	
A	Aluminum - 6061-T6 3000† psi • 20.7 MPa
D	Ductile Iron - D4512 5000† psi • 34.5 MPa

† Working pressure should be considered in accordance with ISO 4413 to determine appropriate material type.

Sun Cavity Size				
T2A	**T11A**	**T21A**	**T33A**	**T63A**
T3A	**T13A**	**T22A**	**T52A**	**T64A**
T5A	**T16A**	**T23A**	**T53A**	**T162A**
T8A	**T17A**	**T24A**	**T54A**	**T163A**
T9A	**T18A**	**T31A**	**T61A**	**---**
T10A	**T19A**	**T32A**	**T62A**	**---**

Product Type	
CB	Cavity Bodies

Size of Port 1 & 2	
4	1/4 inch (-4) Hose/Fitting size (**M**) port threads = M10 x 1.0
6	3/8 inch (-6) Hose/Fitting size (**M**) port threads = M14 x 1.5
8	1/2 inch (-8) Hose/Fitting size (**M**) port threads = M18 x 1.5
12	3/4 inch (-12) Hose/Fitting size (**M**) port threads = M27 x 2.0
16	1 inch (-16) Hose/Fitting size (**M**) port threads = M33 x 2.0
20	1-1/4 inch (-20) Hose/Fitting size (**M**) port threads = M42 x 2.0

Consult chart for port size availability with each cavity size, and for additional port sizes.

Port Threads	
P	NPTF ANSI B1.20.3
S	SAE ISO 11926; SAE 1926
B	BSPP ISO 1179
M	ISO ISO 6149
T	BSPT ISO 7

Daman Products Company, Inc. • 1811 North Home Street • Mishawaka, IN 46545-7267
Tel: 800.959.7841 574.259.7841 • Fax: 800.241.7664 • Email: sales@daman.com • www.daman.com

Sun Cavity Bodies - Aluminum & Ductile Iron

Part Number	A	B	C	D	E	F	G	H	I	J	K	L	M	N	O	P	Q	Port 1	Port 2	Port 3	Port 4	Port 5	Port 6
T2ACB4	3.00	1.50	1.63	0.75	0.75	1.44	3.25	-	2.72	-	2.97	0.75	0.51	1.63	0.75	0.28	2.97	1/4	1/4	1/4	-	-	-
T2ACB6	3.00	1.50	1.63	0.75	0.75	1.44	3.25	-	2.72	-	2.97	0.75	0.51	1.63	0.75	0.28	2.97	3/8	3/8	3/8	-	-	-
T2ACB8	3.00	1.50	1.63	0.75	0.75	1.44	3.25	-	2.72	-	2.97	0.75	0.51	1.63	0.75	0.28	2.97	1/2	1/2	3/8	-	-	-
T2ACB12	3.00	2.00	1.63	1.00	1.00	1.44	3.25	-	2.72	-	2.97	1.00	0.51	1.63	1.00	0.28	2.97	3/4	3/4	3/8	-	-	-
T3ACB4	2.00	1.50	1.16	0.75	0.75	1.09	3.00	0.22	-	0.22	-	-	-	1.16	0.75	0.22	2.78	1/4	1/4	-	-	-	-
T3ACB6	2.00	1.50	1.16	0.75	0.75	1.09	3.00	0.22	-	0.22	-	-	-	1.16	0.75	0.22	2.78	3/8	3/8	-	-	-	-
T3ACB8	2.00	1.50	1.16	0.75	0.75	1.09	3.00	0.22	-	0.22	-	-	-	1.16	0.75	0.22	2.78	1/2	1/2	-	-	-	-
T3ACB12	2.25	1.75	1.41	0.88	0.88	1.07	3.00	0.22	-	0.22	-	-	-	1.41	0.88	0.22	2.78	3/4	3/4	-	-	-	-
T5ACB4	2.25	1.50	1.25	0.75	0.75	0.88	3.00	-	2.03	-	2.78	-	-	1.25	0.75	0.22	2.78	1/4	1/4	-	-	-	-
T5ACB6	2.25	1.50	1.25	0.75	0.75	0.88	3.00	-	2.03	-	2.78	-	-	1.25	0.75	0.22	2.78	3/8	3/8	-	-	-	-
T5ACB8	2.25	1.50	1.25	0.75	0.75	0.88	3.00	-	2.03	-	2.78	-	-	1.25	0.75	0.22	2.78	1/2	1/2	-	-	-	-
T5ACB12	2.50	1.75	1.56	0.88	0.88	0.88	3.00	-	2.28	-	2.78	-	-	1.47	0.88	0.22	2.78	3/4	3/4	-	-	-	-
T8ACB4	2.00	1.50	1.16	0.75	0.75	0.52	1.75	-	1.78	-	0.22	-	-	1.16	0.75	0.22	1.53	1/4	1/4	-	-	-	-
T8ACB6	2.00	1.50	1.16	0.75	0.75	0.52	1.75	-	1.78	-	0.22	-	-	1.16	0.75	0.22	1.53	3/8	3/8	-	-	-	-
T9ACB4	2.50	1.50	1.25	0.75	0.75	0.90	2.00	-	2.28	-	1.78	0.75	0.53	1.25	0.75	0.22	1.78	1/4	1/4	1/4	-	-	-
T9ACB6	2.50	1.50	1.25	0.75	0.75	0.90	2.00	-	2.28	-	1.78	0.75	0.53	1.25	0.75	0.22	1.78	3/8	3/8	1/4	-	-	-
T10ACB4	1.63	1.25	0.94	0.63	0.63	0.96	2.50	0.22	-	0.22	-	-	-	0.94	0.63	0.22	2.28	1/4	1/4	-	-	-	-
T10ACB6	1.63	1.25	0.94	0.63	0.63	0.96	2.50	0.22	-	0.22	-	-	-	0.94	0.63	0.22	2.28	3/8	3/8	-	-	-	-
T10ACB8	2.25	1.75	1.44	0.88	0.88	0.85	3.00	-	2.03	-	2.00	-	-	1.25	0.88	0.22	2.00	1/2	1/2	-	-	-	-
T10ACB12	2.25	1.75	1.44	0.88	0.88	0.85	3.00	-	2.03	-	2.00	-	-	1.25	0.88	0.22	2.00	3/4	3/4	-	-	-	-
T11ACB4	2.50	1.25	1.25	0.63	0.63	1.41	3.00	-	2.28	-	2.78	0.63	0.47	1.25	0.63	0.22	2.78	1/4	1/4	1/4	-	-	-
T11ACB6	2.50	1.25	1.25	0.63	0.63	1.41	3.00	-	2.28	-	2.78	0.63	0.47	1.25	0.63	0.22	2.78	3/8	3/8	3/8	-	-	-
T11ACB8	2.50	1.25	1.25	0.63	0.63	1.41	3.00	-	2.28	-	2.78	0.63	0.47	1.25	0.63	0.22	2.78	1/2	1/2	3/8	-	-	-
T13ACB4	1.75	1.25	0.94	0.63	0.63	0.78	2.25	-	1.53	-	2.03	-	-	0.94	0.63	0.22	2.03	1/4	1/4	-	-	-	-
T13ACB6	1.75	1.25	0.94	0.63	0.63	0.78	2.25	-	1.53	-	2.03	-	-	0.94	0.63	0.22	2.03	3/8	3/8	-	-	-	-
T13ACB8	2.50	1.75	1.63	0.88	0.88	0.85	3.00	-	2.28	-	2.78	-	-	1.44	0.88	0.22	2.78	1/2	1/2	-	-	-	-
T13ACB12	2.50	1.75	1.63	0.88	0.88	0.85	3.00	-	2.28	-	2.78	-	-	1.44	0.88	0.22	2.78	3/4	3/4	-	-	-	-
T16ACB12	3.00	2.50	1.94	1.25	1.25	1.44	4.00	0.28	-	0.28	-	-	-	1.75	1.25	0.28	3.72	3/4	3/4	-	-	-	-
T16ACB16	3.00	2.50	1.94	1.25	1.25	1.44	4.00	0.28	-	0.28	-	-	-	1.75	1.25	0.28	3.72	1	1	-	-	-	-
T16ACB20	3.00	2.50	1.94	1.25	1.25	1.44	4.00	0.28	-	0.28	-	-	-	1.75	1.25	0.28	3.72	1 1/4	1 1/4	-	-	-	-
T17ACB12	4.00	2.50	2.00	1.25	1.25	1.91	4.25	-	3.72	-	3.97	1.25	0.60	2.00	1.25	0.28	3.97	3/4	3/4	1/2	-	-	-
T17ACB16	4.00	2.50	2.00	1.25	1.25	1.91	4.25	-	3.72	-	3.97	1.25	0.60	2.00	1.25	0.28	3.97	1	1	1/2	-	-	-
T17ACB20	4.00	2.50	2.00	1.25	1.25	1.91	4.25	-	3.72	-	3.97	1.25	0.60	2.00	1.25	0.28	3.97	1 1/4	1 1/4	1/2	-	-	-
T18ACB12	3.50	2.75	2.06	1.38	1.38	1.73	4.50	0.34	-	0.34	-	-	-	2.06	1.38	0.34	4.16	3/4	3/4	-	-	-	-
T18ACB16	3.50	2.75	2.06	1.38	1.38	1.73	4.50	0.34	-	0.34	-	-	-	2.06	1.38	0.34	4.16	1	1	-	-	-	-
T18ACB20	3.50	2.75	2.06	1.38	1.38	1.73	4.50	0.34	-	0.34	-	-	-	2.06	1.38	0.34	4.16	1 1/4	1 1/4	-	-	-	-
T19ACB16	4.38	3.00	2.22	1.50	1.50	2.54	5.00	-	4.03	-	4.66	1.50	0.75	2.22	1.50	0.34	4.66	1	1	3/4	-	-	-
T19ACB20	4.38	3.00	2.22	1.50	1.50	2.54	5.00	-	4.03	-	4.66	1.50	0.75	2.22	1.50	0.34	4.66	1 1/4	1 1/4	3/4	-	-	-
T21ACB4	2.50	1.25	1.25	0.63	0.63	1.98	3.56	-	2.28	-	3.34	0.63	1.07	1.25	0.63	0.22	3.34	1/4	1/4	1/4	1/4	-	-
T21ACB6	2.50	1.25	1.25	0.63	0.63	1.98	3.56	-	2.28	-	3.34	0.63	1.07	1.25	0.63	0.22	3.34	3/8	3/8	3/8	1/4	-	-
T21ACB8	2.50	1.25	1.25	0.63	0.63	1.98	3.56	-	2.28	-	3.34	0.63	1.07	1.25	0.63	0.22	3.34	1/2	1/2	3/8	1/4	-	-
T22ACB6	3.50	2.00	1.75	1.00	1.00	2.04	3.75	-	3.22	-	3.47	1.00	1.10	1.75	1.00	0.28	3.47	3/8	3/8	3/8	3/8	-	-
T22ACB8	3.50	2.00	1.75	1.00	1.00	2.04	3.75	-	3.22	-	3.47	1.00	1.10	1.75	1.00	0.28	3.47	1/2	1/2	3/8	3/8	-	-
T22ACB12	3.50	2.00	1.75	1.00	1.00	2.04	4.00	-	3.22	-	3.72	1.00	1.10	1.75	1.00	0.28	3.72	3/4	3/4	3/8	3/8	-	-
T23ACB12	4.00	2.50	2.22	1.25	1.25	2.63	4.75	-	3.72	-	4.47	1.25	1.35	2.22	1.25	0.28	4.47	3/4	3/4	1/2	3/8	-	-
T23ACB16	4.00	2.50	2.22	1.25	1.25	2.63	4.75	-	3.72	-	4.47	1.25	1.35	2.22	1.25	0.28	4.47	1	1	1/2	3/8	-	-
T23ACB20	4.00	2.50	2.22	1.25	1.25	2.63	4.75	-	3.72	-	4.47	1.25	1.35	2.22	1.25	0.28	4.47	1 1/4	1 1/4	1/2	3/8	-	-
T24ACB16	5.00	3.00	2.50	1.50	1.50	3.38	5.87	-	4.66	-	5.53	1.50	1.60	2.50	1.50	0.34	5.53	1	1	3/4	1/2	-	-
T24ACB20	5.00	3.00	2.50	1.50	1.50	3.38	5.87	-	4.66	-	5.53	1.50	1.60	2.50	1.50	0.34	5.53	1 1/4	1 1/4	3/4	1/2	-	-

Chart continued on next page

Specifications, descriptions, and dimensional data are subject to correction or change without notice or incurring obligation. Download latest catalog page revisions at www.daman.com.

Daman Products Company, Inc. • 1811 North Home Street • Mishawaka, IN 46545-7267
Tel: 800.959.7841 574.259.7841 • Fax: 800.241.7664 • Email: sales@daman.com • www.daman.com

Daman®

Sun Cavity Bodies - Aluminum & Ductile Iron

Part Number	A	B	C	D	E	F	G	H	I	J	K	L	M	N	O	P	Q	Port 1	Port 2	Port 3	Port 4	Port 5	Port 6
T31ACB4	2.75	1.25	1.38	0.63	0.63	2.72	4.75	-	2.53	-	4.53	0.63	1.82	1.38	0.63	0.22	4.53	1/4	1/4	1/4	1/4	-	-
T31ACB6	2.75	1.25	1.38	0.63	0.63	2.72	4.75	-	2.53	-	4.53	0.63	1.82	1.38	0.63	0.22	4.53	3/8	3/8	3/8	3/8	-	-
T31ACB8	2.75	1.25	1.38	0.63	0.63	2.72	4.75	-	2.53	-	4.53	0.63	1.82	1.38	0.63	0.22	4.53	1/2	1/2	1/2	1/2	-	-
T32ACB6	3.50	2.00	1.75	1.00	1.00	2.98	5.25	-	3.22	-	4.97	1.00	2.02	1.75	1.00	0.28	4.97	3/8	3/8	3/8	3/8	-	-
T32ACB8	3.50	2.00	1.75	1.00	1.00	2.98	5.25	-	3.22	-	4.97	1.00	2.02	1.75	1.00	0.28	4.97	1/2	1/2	1/2	1/2	-	-
T32ACB12	3.50	2.00	1.75	1.00	1.00	2.98	5.25	-	3.22	-	4.97	1.00	2.02	1.75	1.00	0.28	4.97	3/4	3/4	3/4	3/4	-	-
T33ACB12	4.00	2.25	2.00	1.13	1.13	3.71	6.38	-	3.66	-	6.03	1.13	2.53	2.00	1.13	0.34	6.03	3/4	3/4	3/4	3/4	-	-
T33ACB16	4.00	2.25	2.00	1.13	1.13	3.71	6.38	-	3.66	-	6.03	1.13	2.53	2.00	1.13	0.34	6.03	1	1	1	1	-	-
T33ACB20	4.00	3.00	2.00	1.50	1.50	3.71	6.50	-	3.66	-	6.16	1.50	2.53	2.00	1.50	0.34	6.16	1 1/4	1 1/4	1 1/4	1 1/4	-	-
T52ACB6	3.50	2.00	1.75	1.00	1.00	4.40	6.25	-	3.22	-	5.97	1.00	3.43	1.75	1.00	0.28	5.97	3/8	3/8	3/8	3/8	3/8	3/8
T52ACB8	3.50	2.00	1.75	1.00	1.00	4.40	6.25	-	3.22	-	5.97	1.00	3.43	1.75	1.00	0.28	5.97	1/2	1/2	1/2	1/2	1/2	3/8
T52ACB12	3.50	2.00	1.75	1.00	1.00	4.40	6.25	-	3.22	-	5.97	1.00	3.43	1.75	1.00	0.28	5.97	3/4	3/4	3/4	3/4	3/4	3/8
T53ACB12	4.00	3.00	2.00	1.50	1.50	5.52	7.63	-	3.66	-	7.28	1.50	4.35	2.00	1.50	0.34	7.28	3/4	3/4	3/4	3/4	3/4	1/2
T53ACB16	4.00	3.00	2.00	1.50	1.50	5.52	7.63	-	3.66	-	7.28	1.50	4.35	2.00	1.50	0.34	7.28	1	1	1	1	1	1/2
T54ACB20	5.00	4.00	2.50	2.00	2.00	7.22	10.00	-	4.66	-	9.66	2.00	5.66	2.50	2.00	0.34	9.66	1 1/4	1 1/4	1 1/4	1 1/4	1 1/4	3/4
T61ACB4	2.75	1.25	1.38	0.63	0.63	3.94	5.62	-	2.53	-	5.40	0.63	3.03	1.38	0.63	0.22	5.40	1/4	1/4	1/4	1/4	1/4	1/4
T61ACB6	2.75	1.25	1.38	0.63	0.63	3.94	5.62	-	2.53	-	5.40	0.63	3.03	1.38	0.63	0.22	5.40	3/8	3/8	3/8	3/8	3/8	1/4
T61ACB8	2.75	1.25	1.38	0.63	0.63	3.94	5.62	-	2.53	-	5.40	0.63	3.03	1.38	0.63	0.22	5.40	1/2	1/2	1/2	1/2	3/8	1/4
T62ACB6	3.50	2.00	1.75	1.00	1.00	4.33	6.25	-	3.22	-	5.97	1.00	3.38	1.75	1.00	0.28	5.97	3/8	3/8	3/8	3/8	3/8	3/8
T62ACB8	3.50	2.00	1.75	1.00	1.00	4.33	6.25	-	3.22	-	5.97	1.00	3.38	1.75	1.00	0.28	5.97	1/2	1/2	1/2	1/2	3/8	3/8
T62ACB12	3.50	2.00	1.75	1.00	1.00	4.33	6.25	-	3.22	-	5.97	1.00	3.38	1.75	1.00	0.28	5.97	3/4	3/4	3/4	3/4	3/8	3/8
T63ACB12	4.00	2.25	2.00	1.13	1.13	5.30	7.75	-	3.66	-	7.41	1.13	4.13	2.00	1.13	0.34	7.41	3/4	3/4	3/4	3/4	1/2	3/8
T63ACB16	4.00	2.25	2.00	1.13	1.13	5.30	7.75	-	3.66	-	7.41	1.13	4.13	2.00	1.13	0.34	7.41	1	1	1	1	1/2	3/8
T63ACB20	4.50	3.00	2.25	1.50	1.50	5.30	8.00	-	4.16	-	7.66	1.50	4.13	2.25	1.50	0.34	7.66	1 1/4	1 1/4	1 1/4	1 1/4	1/2	3/8
T64ACB16	5.00	3.00	2.50	1.50	1.50	6.51	9.62	-	4.66	-	9.28	1.50	5.01	2.50	1.50	0.34	9.28	1	1	1	1	3/4	1/2
T64ACB20	5.00	3.00	2.50	1.50	1.50	6.51	9.62	-	4.66	-	9.28	1.50	5.01	2.50	1.50	0.34	9.28	1 1/4	1 1/4	1 1/4	1 1/4	3/4	1/2
T162ACB4	1.88	1.25	1.06	0.63	0.63	0.67	2.00	-	1.66	-	1.78	-	-	1.06	0.63	0.22	1.78	1/4	1/4	-	-	-	-
T162ACB6	1.88	1.25	1.06	0.63	0.63	0.67	2.00	-	1.66	-	1.78	-	-	1.06	0.63	0.22	1.78	3/8	3/8	-	-	-	-
T162ACB8	2.00	1.25	1.23	0.63	0.63	0.67	2.25	-	1.78	-	1.22	-	-	1.23	0.63	0.22	2.03	1/2	1/2	-	-	-	-
T163ACB4	2.25	1.25	1.10	0.63	0.63	1.28	2.75	-	2.03	-	2.53	0.63	0.46	1.10	0.63	0.22	2.53	1/4	1/4	1/4	-	-	-
T163ACB6	2.25	1.25	1.10	0.63	0.63	1.28	2.75	-	2.03	-	2.53	0.63	0.46	1.10	0.63	0.22	2.53	3/8	3/8	3/8	-	-	-
T163ACB8	2.75	1.25	1.38	0.63	0.63	1.28	3.00	-	2.53	-	2.78	0.63	0.46	1.38	0.63	0.22	2.78	1/2	1/2	3/8	-	-	-

Specifications, descriptions, and dimensional data are subject to correction or change without notice or incurring obligation.
Download latest catalog page revisions at www.daman.com.

Daman Products Company, Inc. • 1811 North Home Street • Mishawaka, IN 46545-7267
Tel: 800.959.7841 574.259.7841 • Fax: 800.241.7664 • Email: sales@daman.com • www.daman.com

Sun Cavity Bodies w/Gauge Ports - Al. & Du. Iron

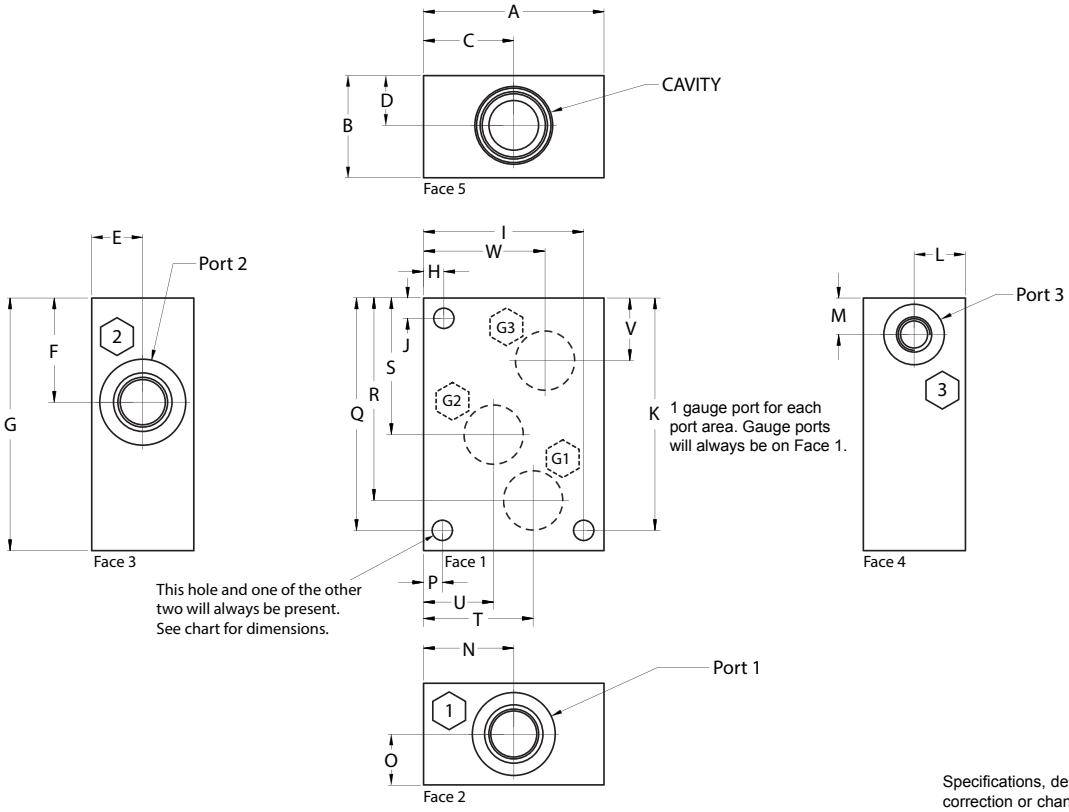

1 gauge port for each port area. Gauge ports will always be on Face 1.

On 4-port cavities, Port 4 is on Face 3.
On 5-port cavities, Port 5 is on Face 4.
On 6-port cavities, Port 6 is on Face 3.

Call factory for locations.

For 4-, 5- & 6-ported cavities, consult factory for side port and gauge port locations.

Mounting hardware for Sun cavity bodies (Aluminum or Ductile) is available on page 197.15.

Specifications, descriptions, and dimensional data are subject to correction or change without notice or incurring obligation. Download latest catalog page revisions at www.daman.com.

Ordering Information

Daman can sell Sun valves. See page 227 for stocked valves, or consult factory for price and delivery of valves not shown.

For **coating options** see pages 245-246.

Material	Sun Cavity Size	Product Type	Port Size	Port Threads	/	G

Material

A	Aluminum - 6061-T6 3000† psi • 20.7 MPa
D	Ductile Iron - D4512 5000† psi • 34.5 MPa

† Working pressure should be considered in accordance with ISO 4413 to determine appropriate material type.

Sun Cavity Size

T2A	**T11A**	**T21A**	**T33A**	**T63A**
T3A	**T13A**	**T22A**	**T52A**	**T64A**
T5A	**T16A**	**T23A**	**T53A**	**T162A**
T8A	**T17A**	**T24A**	**T54A**	**T163A**
T9A	**T18A**	**T31A**	**T61A**	---
T10A	**T19A**	**T32A**	**T62A**	---

Product Type

CB	Cavity Bodies

Size of Port 1 & 2

4	1/4 inch (-4) Hose/Fitting size (**M**) port threads = M10 x 1.0
6	3/8 inch (-6) Hose/Fitting size (**M**) port threads = M14 x 1.5
8	1/2 inch (-8) Hose/Fitting size (**M**) port threads = M18 x 1.5
12	3/4 inch (-12) Hose/Fitting size (**M**) port threads = M27 x 2.0
16	1 inch (-16) Hose/Fitting size (**M**) port threads = M33 x 2.0
20	1-1/4 inch (-20) Hose/Fitting size (**M**) port threads = M42 x 2.0

Consult chart for port size availability with each cavity size, and for additional port sizes.

Port Threads

P	NPTF ANSI B1.20.3
S	SAE ISO 11926; SAE 1926
B	BSPP ISO 1179
M	ISO ISO 6149
T	BSPT ISO 7

Gauge Port

G	Gauge Port

0.250 NPTF (P option)
0.250 BSPP (B option)
0.250 BSPT (T option)
M10 x 1.0 (M option)
-6 SAE (S option)

Port "style" of gauge port is determined by selection of "port threads".

Daman Products Company, Inc. • 1811 North Home Street • Mishawaka, IN 46545-7267
Tel: 800.959.7841 574.259.7841 • Fax: 800.241.7664 • Email: sales@daman.com • www.daman.com

Daman®

Sun Cavity Bodies w/Gauge Ports - Al. & Du. Iron

Part Number	A	B	C	D	E	F	G	H	I	J	K	L	M	N	O	P	Q	R	S	T	U	V	W	Port 1	Port 2	Port 3	Port 4	Port 5	Port 6
T2ACB4/G	3.00	2.00	1.63	0.75	0.75	1.44	3.25	-	2.72	-	2.97	0.75	0.51	1.63	0.75	0.28	2.97	2.47	1.44	1.63	0.88	0.51	2.34	1/4	1/4	1/4	-	-	-
T2ACB6/G	3.00	2.00	1.63	0.75	0.75	1.44	3.25	-	2.72	-	2.97	0.75	0.51	1.63	0.75	0.28	2.97	2.47	1.44	1.63	0.88	0.51	2.34	3/8	3/8	3/8	-	-	-
T2ACB8/G	3.00	2.00	1.63	0.75	0.75	1.44	3.25	-	2.72	-	2.97	0.75	0.51	1.63	0.75	0.28	2.97	2.47	1.44	1.63	0.88	0.51	2.34	1/2	1/2	3/8	-	-	-
T2ACB12/G	3.00	2.25	1.63	1.00	1.00	1.44	3.25	-	2.72	-	2.97	1.00	0.51	1.63	1.00	0.28	2.97	2.44	1.44	2.09	1.00	0.51	2.34	3/4	3/4	3/8	-	-	-
T3ACB4/G	2.00	2.00	1.16	0.75	0.75	1.09	3.00	0.22	-	0.22	-	-	-	1.16	0.75	0.22	2.78	2.22	1.09	1.16	0.78	-	-	1/4	1/4	-	-	-	-
T3ACB6/G	2.00	2.00	1.16	0.75	0.75	1.09	3.00	0.22	-	0.22	-	-	-	1.16	0.75	0.22	2.78	2.22	1.09	1.16	0.78	-	-	3/8	3/8	-	-	-	-
T3ACB8/G	2.00	2.00	1.16	0.75	0.75	1.09	3.00	0.22	-	0.22	-	-	-	1.16	0.75	0.22	2.78	2.22	1.09	1.16	0.78	-	-	1/2	1/2	-	-	-	-
T3ACB12/G	2.25	2.25	1.41	0.88	0.88	1.07	3.00	0.22	-	0.22	-	-	-	1.41	0.88	0.22	2.78	2.22	1.07	1.41	0.94	-	-	3/4	3/4	-	-	-	-
T5ACB4/G	2.25	2.00	1.25	0.75	0.75	0.88	3.00	-	2.03	-	2.78	-	-	1.25	0.75	0.22	2.78	2.09	0.88	1.25	0.84	-	-	1/4	1/4	-	-	-	-
T5ACB6/G	2.25	2.00	1.25	0.75	0.75	0.88	3.00	-	2.03	-	2.78	-	-	1.25	0.75	0.22	2.78	2.09	0.88	1.25	0.84	-	-	3/8	3/8	-	-	-	-
T5ACB8/G	2.25	2.00	1.25	0.75	0.75	0.88	3.00	-	2.03	-	2.78	-	-	1.25	0.75	0.22	2.78	2.09	0.88	1.25	0.84	-	-	1/2	1/2	-	-	-	-
T5ACB12/G	2.50	2.25	1.56	0.88	0.88	0.88	3.00	-	2.28	-	2.78	-	-	1.47	0.88	0.22	2.78	2.00	0.88	1.56	1.00	-	-	3/4	3/4	-	-	-	-
T8ACB4/G	2.00	2.00	1.16	0.75	0.75	0.52	1.75	-	1.78	-	0.22	-	-	1.16	0.75	0.22	1.53	1.18	0.52	1.41	0.59	-	-	1/4	1/4	-	-	-	-
T8ACB6/G	2.00	2.00	1.16	0.75	0.75	0.52	1.75	-	1.78	-	0.22	-	-	1.16	0.75	0.22	1.53	1.18	0.52	1.41	0.59	-	-	3/8	3/8	-	-	-	-
T9ACB4/G	2.50	1.75	1.25	0.75	0.75	0.90	2.00	-	2.28	-	1.78	0.75	0.53	1.25	0.75	0.22	1.78	1.44	0.90	1.53	0.66	0.53	1.94	1/4	1/4	1/4	-	-	-
T9ACB6/G	2.50	1.75	1.25	0.75	0.75	0.90	2.00	-	2.28	-	1.78	0.75	0.53	1.25	0.75	0.22	1.78	1.44	0.90	1.53	0.66	0.53	1.94	3/8	3/8	1/4	-	-	-
T10ACB4/G	1.63	2.00	0.94	0.63	0.63	0.96	2.50	0.22	-	0.22	-	-	-	0.94	0.63	0.22	2.28	1.94	0.96	0.94	0.59	-	-	1/4	1/4	-	-	-	-
T10ACB6/G	1.63	2.00	0.94	0.63	0.63	0.96	2.50	0.22	-	0.22	-	-	-	0.94	0.63	0.22	2.28	1.94	0.96	0.94	0.59	-	-	3/8	3/8	-	-	-	-
T10ACB8/G	2.25	2.00	1.44	0.88	0.88	0.85	3.00	-	2.03	-	2.00	-	-	1.25	0.88	0.22	2.00	2.00	0.85	1.25	1.25	-	-	1/2	1/2	-	-	-	-
T10ACB12/G	2.25	2.00	1.44	0.88	0.88	0.85	3.00	-	2.03	-	2.00	-	-	1.25	0.88	0.22	2.00	2.00	0.85	1.25	1.25	-	-	3/4	3/4	-	-	-	-
T11ACB4/G	2.50	1.75	1.25	0.63	0.63	1.41	3.00	-	2.28	-	2.78	0.63	0.47	1.25	0.63	0.22	2.78	2.38	1.41	1.59	0.75	0.47	1.81	1/4	1/4	1/4	-	-	-
T11ACB6/G	2.50	1.75	1.25	0.63	0.63	1.41	3.00	-	2.28	-	2.78	0.63	0.47	1.25	0.63	0.22	2.78	2.38	1.41	1.59	0.75	0.47	1.81	3/8	3/8	3/8	-	-	-
T11ACB8/G	2.50	1.75	1.25	0.63	0.63	1.41	3.00	-	2.28	-	2.78	0.63	0.47	1.25	0.63	0.22	2.78	2.38	1.41	1.59	0.75	0.47	1.81	1/2	1/2	3/8	-	-	-
T13ACB4/G	1.75	1.75	0.94	0.63	0.63	0.78	2.25	-	1.53	-	2.03	-	-	0.94	0.63	0.22	2.03	1.69	0.78	0.97	0.53	-	-	1/4	1/4	-	-	-	-
T13ACB6/G	1.75	1.75	0.94	0.63	0.63	0.78	2.25	-	1.53	-	2.03	-	-	0.94	0.63	0.22	2.03	1.69	0.78	0.97	0.53	-	-	3/8	3/8	-	-	-	-
T13ACB8/G	2.50	2.00	1.63	0.88	0.88	0.85	3.00	-	2.28	-	2.78	-	-	1.44	0.88	0.22	2.78	1.94	0.84	1.63	1.63	-	-	1/2	1/2	-	-	-	-
T13ACB12/G	2.50	2.00	1.63	0.88	0.88	0.85	3.00	-	2.28	-	2.78	-	-	1.44	0.88	0.22	2.78	1.94	0.84	1.63	1.63	-	-	3/4	3/4	-	-	-	-
T16ACB12/G	3.00	2.50	1.94	1.25	1.25	1.44	4.00	0.28	-	0.28	-	-	-	1.75	1.25	0.28	3.72	2.94	1.44	1.03	1.31	-	-	3/4	3/4	-	-	-	-
T16ACB16/G	3.00	2.50	1.94	1.25	1.25	1.44	4.00	0.28	-	0.28	-	-	-	1.75	1.25	0.28	3.72	2.94	1.44	1.03	1.31	-	-	1	1	-	-	-	-
T16ACB20/G	3.00	2.50	1.94	1.25	1.25	1.44	4.00	0.28	-	0.28	-	-	-	1.75	1.25	0.28	3.72	2.94	1.44	1.03	1.31	-	-	1 1/4	1 1/4	-	-	-	-
T17ACB12/G	4.00	2.50	2.00	1.25	1.25	1.91	4.25	-	3.72	-	3.97	1.25	0.60	2.00	1.25	0.28	3.97	3.16	1.91	2.00	1.25	0.60	3.09	3/4	3/4	1/2	-	-	-
T17ACB16/G	4.00	2.50	2.00	1.25	1.25	1.91	4.25	-	3.72	-	3.97	1.25	0.60	2.00	1.25	0.28	3.97	3.16	1.91	2.00	1.25	0.60	3.09	1	1	1/2	-	-	-
T17ACB20/G	4.00	2.50	2.00	1.25	1.25	1.91	4.25	-	3.72	-	3.97	1.25	0.60	2.00	1.25	0.28	3.97	3.16	1.91	2.00	1.25	0.60	3.09	1 1/4	1 1/4	1/2	-	-	-
T18ACB12/G	3.50	3.00	2.06	1.38	1.38	1.73	4.50	0.34	-	0.34	-	-	-	2.06	1.38	0.34	4.16	3.50	1.73	2.06	1.03	-	-	3/4	3/4	-	-	-	-
T18ACB16/G	3.50	3.00	2.06	1.38	1.38	1.73	4.50	0.34	-	0.34	-	-	-	2.06	1.38	0.34	4.16	3.50	1.73	2.06	1.03	-	-	1	1	-	-	-	-
T18ACB20/G	3.50	3.00	2.06	1.38	1.38	1.73	4.50	0.34	-	0.34	-	-	-	2.06	1.38	0.34	4.16	3.50	1.73	2.06	1.03	-	-	1 1/4	1 1/4	-	-	-	-
T19ACB16/G	4.38	3.00	2.22	1.50	1.50	2.54	5.00	-	4.03	-	4.66	1.50	0.75	2.22	1.50	0.34	4.66	4.06	2.54	2.22	1.25	0.75	3.38	1	1	3/4	-	-	-
T19ACB20/G	4.38	3.00	2.22	1.50	1.50	2.54	5.00	-	4.03	-	4.66	1.50	0.75	2.22	1.50	0.34	4.66	4.06	2.54	2.22	1.25	0.75	3.38	1 1/4	1 1/4	3/4	-	-	-
T21ACB4/G	2.50	2.00	1.25	0.63	0.63	1.98	3.56	-	2.28	-	3.34	0.63	1.07	1.25	0.63	0.22	3.34	2.92	1.98	1.50	0.75	1.07	1.84	1/4	1/4	1/4	1/4	-	-
T21ACB6/G	2.50	2.00	1.25	0.63	0.63	1.98	3.56	-	2.28	-	3.34	0.63	1.07	1.25	0.63	0.22	3.34	2.92	1.98	1.50	0.75	1.07	1.84	3/8	3/8	3/8	1/4	-	-
T21ACB8/G	2.50	2.00	1.25	0.63	0.63	1.98	3.56	-	2.28	-	3.34	0.63	1.07	1.25	0.63	0.22	3.34	2.92	1.98	1.50	0.75	1.07	1.84	1/2	1/2	3/8	1/4	-	-
T22ACB6/G	3.50	2.25	1.75	1.00	1.00	2.04	3.75	-	3.22	-	3.47	1.00	1.10	1.75	1.00	0.28	3.47	3.07	2.04	1.75	1.09	1.10	2.78	3/8	3/8	3/8	3/8	-	-
T22ACB8/G	3.50	2.25	1.75	1.00	1.00	2.04	3.75	-	3.22	-	3.47	1.00	1.10	1.75	1.00	0.28	3.47	3.07	2.04	1.75	1.09	1.10	2.78	1/2	1/2	3/8	3/8	-	-
T22ACB12/G	3.50	2.25	1.75	1.00	1.00	2.04	4.00	-	3.22	-	3.72	1.00	1.10	1.75	1.00	0.28	3.72	3.07	2.04	1.75	1.09	1.10	2.78	3/4	3/4	3/8	3/8	-	-
T23ACB12/G	4.00	2.50	2.22	1.25	1.25	2.63	4.75	-	3.72	-	4.47	1.25	1.35	2.22	1.25	0.28	4.47	3.82	2.63	2.91	1.44	1.35	3.22	3/4	3/4	1/2	3/8	-	-
T23ACB16/G	4.00	2.50	2.22	1.25	1.25	2.63	4.75	-	3.72	-	4.47	1.25	1.35	2.22	1.25	0.28	4.47	3.82	2.63	2.91	1.44	1.35	3.22	1	1	1/2	3/8	-	-
T23ACB20/G	4.00	2.50	2.22	1.25	1.25	2.63	4.75	-	3.72	-	4.47	1.25	1.35	2.22	1.25	0.28	4.47	3.82	2.63	2.91	1.44	1.35	3.22	1 1/4	1 1/4	1/2	3/8	-	-
T24ACB16/G	5.00	3.00	2.50	1.50	1.50	3.38	5.87	-	4.66	-	5.53	1.50	1.60	2.50	1.50	0.34	5.53	4.91	3.38	2.50	1.50	1.60	3.75	1	1	3/4	1/2	-	-
T24ACB20/G	5.00	3.00	2.50	1.50	1.50	3.38	5.87	-	4.66	-	5.53	1.50	1.60	2.50	1.50	0.34	5.53	4.91	3.38	2.50	1.50	1.60	3.75	1 1/4	1 1/4	3/4	1/2	-	-

Chart continued on next page

Specifications, descriptions, and dimensional data are subject to correction or change without notice or incurring obligation.
Download latest catalog page revisions at www.daman.com.

Daman Products Company, Inc. • 1811 North Home Street • Mishawaka, IN 46545-7267
Tel: 800.959.7841 574.259.7841 • Fax: 800.241.7664 • Email: sales@daman.com • www.daman.com

Sun Cavity Bodies w/Gauge Ports - Al. & Du. Iron

Part Number	A	B	C	D	E	F	G	H	I	J	K	L	M	N	O	P	Q	R	S	T	U	V	W	Port 1	Port 2	Port 3	Port 4	Port 5	Port 6
T31ACB4/G	2.75	2.25	1.38	0.63	0.63	2.72	4.75	-	2.53	-	4.53	0.63	1.82	1.38	0.63	0.22	4.53	3.94	2.72	1.38	0.78	1.82	1.94	1/4	1/4	1/4	1/4	-	-
T31ACB6/G	2.75	2.25	1.38	0.63	0.63	2.72	4.75	-	2.53	-	4.53	0.63	1.82	1.38	0.63	0.22	4.53	3.94	2.72	1.38	0.78	1.82	1.94	3/8	3/8	3/8	3/8	-	-
T31ACB8/G	2.75	2.25	1.38	0.63	0.63	2.72	4.75	-	2.53	-	4.53	0.63	1.82	1.38	0.63	0.22	4.53	3.94	2.72	1.38	0.78	1.82	1.94	1/2	1/2	1/2	1/2	-	-
T32ACB6/G	3.50	2.00	1.75	1.00	1.00	2.98	5.25	-	3.22	-	4.97	1.00	2.02	1.75	1.00	0.28	4.97	4.13	2.98	1.75	1.09	2.02	2.41	3/8	3/8	3/8	3/8	-	-
T32ACB8/G	3.50	2.00	1.75	1.00	1.00	2.98	5.25	-	3.22	-	4.97	1.00	2.02	1.75	1.00	0.28	4.97	4.13	2.98	1.75	1.09	2.02	2.41	1/2	1/2	1/2	1/2	-	-
T32ACB12/G	3.50	2.00	1.75	1.00	1.00	2.98	5.25	-	3.22	-	4.97	1.00	2.02	1.75	1.00	0.28	4.97	4.13	2.98	1.75	1.09	2.02	2.41	3/4	3/4	3/4	3/4	-	-
T33ACB12/G	4.00	2.25	2.00	1.13	1.13	3.71	6.38	-	3.66	-	6.03	1.13	2.53	2.00	1.13	0.34	6.03	5.11	3.71	2.00	1.09	2.53	2.91	3/4	3/4	3/4	3/4	-	-
T33ACB16/G	4.00	2.25	2.00	1.13	1.13	3.71	6.38	-	3.66	-	6.03	1.13	2.53	2.00	1.13	0.34	6.03	5.11	3.71	2.00	1.09	2.53	2.91	1	1	1	1	-	-
T33ACB20/G	4.00	3.00	2.00	1.50	1.50	3.71	6.50	-	3.66	-	6.16	1.50	2.53	2.00	1.50	0.34	6.16	5.11	3.71	2.00	1.09	2.53	2.91	1 1/4	1 1/4	1 1/4	1 1/4	-	-
T52ACB6/G	3.50	2.25	1.75	1.00	1.00	4.40	6.25	-	3.22	-	5.97	1.00	3.43	1.75	1.00	0.28	5.97	5.32	4.40	1.75	1.06	3.43	2.44	3/8	3/8	3/8	3/8	3/8	3/8
T52ACB8/G	3.50	2.25	1.75	1.00	1.00	4.40	6.25	-	3.22	-	5.97	1.00	3.43	1.75	1.00	0.28	5.97	5.32	4.40	1.75	1.06	3.43	2.44	1/2	1/2	1/2	1/2	1/2	3/8
T52ACB12/G	3.50	2.25	1.75	1.00	1.00	4.40	6.25	-	3.22	-	5.97	1.00	3.43	1.75	1.00	0.28	5.97	5.32	4.40	1.75	1.06	3.43	2.44	3/4	3/4	3/4	3/4	3/4	3/8
T53ACB12/G	4.00	3.00	2.00	1.50	1.50	5.52	7.63	-	3.66	-	7.28	1.50	4.35	2.00	1.50	0.34	7.28	6.63	5.52	2.00	0.94	4.35	3.06	3/4	3/4	3/4	3/4	3/4	1/2
T53ACB16/G	4.00	3.00	2.00	1.50	1.50	5.52	7.63	-	3.66	-	7.28	1.50	4.35	2.00	1.50	0.34	7.28	6.63	5.52	2.00	0.94	4.35	3.06	1	1	1	1	1	1/2
T54ACB20/G	5.00	4.00	2.50	2.00	2.00	7.22	10.00	-	4.66	-	9.66	2.00	5.66	2.50	2.00	0.34	9.66	8.75	7.22	2.50	1.00	5.66	4.00	1 1/4	1 1/4	1 1/4	1 1/4	1 1/4	3/4
T61ACB4/G	2.75	2.25	1.38	0.63	0.63	3.94	5.62	-	2.53	-	5.40	0.63	3.03	1.38	0.63	0.22	5.40	4.88	3.94	1.38	0.72	3.03	2.03	1/4	1/4	1/4	1/4	1/4	1/4
T61ACB6/G	2.75	2.25	1.38	0.63	0.63	3.94	5.62	-	2.53	-	5.40	0.63	3.03	1.38	0.63	0.22	5.40	4.88	3.94	1.38	0.72	3.03	2.03	3/8	3/8	3/8	3/8	3/8	1/4
T61ACB8/G	2.75	2.25	1.38	0.63	0.63	3.94	5.62	-	2.53	-	5.40	0.63	3.03	1.38	0.63	0.22	5.40	4.88	3.94	1.38	0.72	3.03	2.03	1/2	1/2	1/2	1/2	3/8	1/4
T62ACB6/G	3.50	2.25	1.75	1.00	1.00	4.33	6.25	-	3.22	-	5.97	1.00	3.38	1.75	1.00	0.28	5.97	5.31	4.33	1.75	1.00	3.38	2.50	3/8	3/8	3/8	3/8	3/8	3/8
T62ACB8/G	3.50	2.25	1.75	1.00	1.00	4.33	6.25	-	3.22	-	5.97	1.00	3.38	1.75	1.00	0.28	5.97	5.31	4.33	1.75	1.00	3.38	2.50	1/2	1/2	1/2	1/2	3/8	3/8
T62ACB12/G	3.50	2.25	1.75	1.00	1.00	4.33	6.25	-	3.22	-	5.97	1.00	3.38	1.75	1.00	0.28	5.97	5.31	4.33	1.75	1.00	3.38	2.50	3/4	3/4	3/4	3/4	3/8	3/8
T63ACB12/G	4.00	2.25	2.00	1.13	1.13	5.30	7.75	-	3.66	-	7.41	1.13	4.13	2.00	1.13	0.34	7.41	6.63	5.30	2.00	1.09	4.13	2.91	3/4	3/4	3/4	3/4	1/2	3/8
T63ACB16/G	4.00	2.25	2.00	1.13	1.13	5.30	7.75	-	3.66	-	7.41	1.13	4.13	2.00	1.13	0.34	7.41	6.63	5.30	2.00	1.09	4.13	2.91	1	1	1	1	1/2	3/8
T63ACB20/G	4.50	3.00	2.25	1.50	1.50	5.30	8.00	-	4.16	-	7.66	1.50	4.13	2.25	1.50	0.34	7.66	6.63	5.30	2.25	1.09	4.13	3.41	1 1/4	1 1/4	1 1/4	1 1/4	1/2	3/8
T64ACB16/G	5.00	3.00	2.50	1.50	1.50	6.51	9.62	-	4.66	-	9.28	1.50	5.01	2.50	1.50	0.34	9.28	8.21	6.51	2.50	1.25	5.01	3.75	1	1	1	1	3/4	1/2
T64ACB20/G	5.00	3.00	2.50	1.50	1.50	6.51	9.62	-	4.66	-	9.28	1.50	5.01	2.50	1.50	0.34	9.28	8.21	6.51	2.50	1.25	5.01	3.75	1 1/4	1 1/4	1 1/4	1 1/4	3/4	1/2
T162ACB4/G	1.88	2.00	1.06	0.63	0.63	0.67	2.00	-	1.66	-	1.78	-	-	1.06	0.63	0.22	1.78	1.50	0.63	0.84	1.35	-	-	1/4	1/4	-	-	-	-
T162ACB6/G	1.88	2.00	1.06	0.63	0.63	0.67	2.00	-	1.66	-	1.78	-	-	1.06	0.63	0.22	1.78	1.50	0.63	0.84	1.35	-	-	3/8	3/8	-	-	-	-
T162ACB8/G	2.00	1.75	1.23	0.63	0.63	0.67	2.25	-	1.78	-	1.22	-	-	1.23	0.63	0.22	2.03	1.53	0.63	0.91	1.35	-	-	1/2	1/2	-	-	-	-
T163ACB4/G	2.25	1.75	1.10	0.63	0.63	1.28	2.75	-	2.03	-	2.53	0.63	0.46	1.10	0.63	0.22	2.53	2.16	1.28	1.25	0.63	0.50	1.66	1/4	1/4	1/4	-	-	-
T163ACB6/G	2.25	1.75	1.10	0.63	0.63	1.28	2.75	-	2.03	-	2.53	0.63	0.46	1.10	0.63	0.22	2.53	2.16	1.28	1.25	0.63	0.50	1.66	3/8	3/8	3/8	-	-	-
T163ACB8/G	2.75	1.75	1.38	0.63	0.63	1.28	3.00	-	2.53	-	2.78	0.63	0.46	1.38	0.63	0.22	2.78	2.16	1.28	1.50	0.88	0.50	1.91	1/2	1/2	3/8	-	-	-

Specifications, descriptions, and dimensional data are subject to correction or change without notice or incurring obligation.
Download latest catalog page revisions at www.daman.com.

Daman Products Company, Inc. • 1811 North Home Street • Mishawaka, IN 46545-7267
Tel: 800.959.7841 574.259.7841 • Fax: 800.241.7664 • Email: sales@daman.com • www.daman.com

Common Cavity Bodies - Aluminum & Ductile Iron

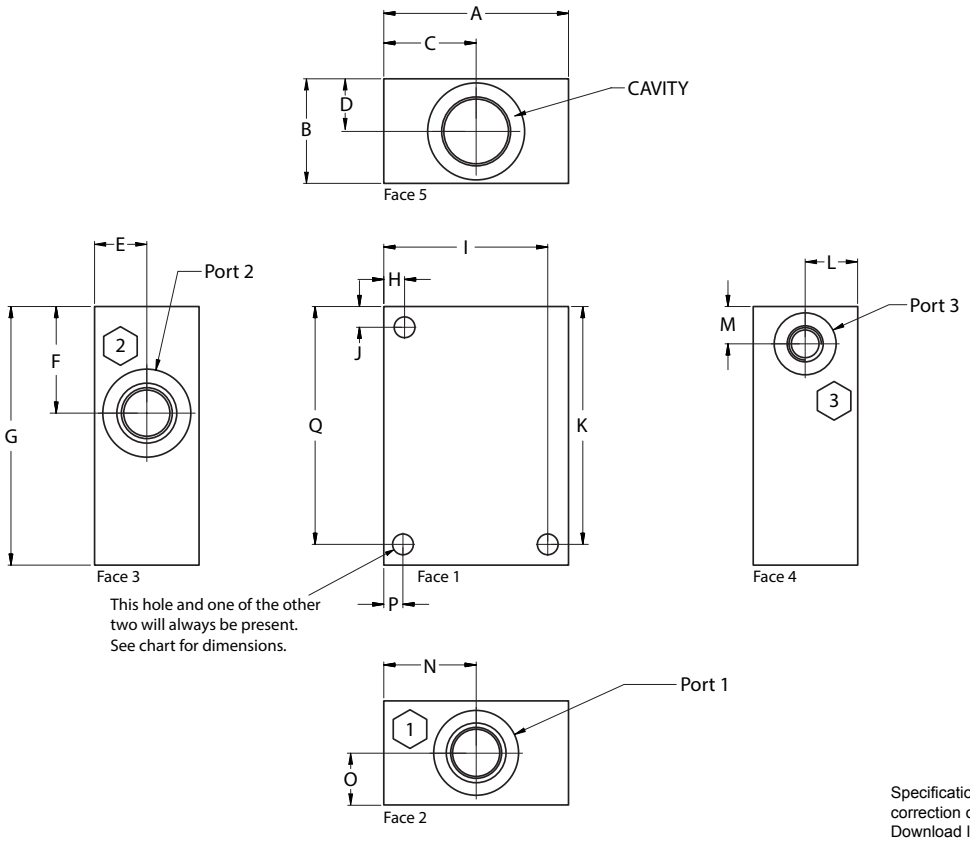

Mounting hardware for common cavity bodies (Aluminum or Ductile) is available on page 197.16.

Specifications, descriptions, and dimensional data are subject to correction or change without notice or incurring obligation. Download latest catalog page revisions at www.daman.com.

Ordering Information

For **coating options** see pages 245-246.

Material	Common Cavity Size	Product Type	Port Size	Port Threads

For common cavity bodies with gauge port options, see pp. 197.13-197.14.

Material	
A	Aluminum - 6061-T6 3000† psi • 20.7 MPa
D	Ductile Iron - D4512 5000† psi • 34.5 MPa

† Working pressure should be considered in accordance with ISO 4413 to determine appropriate material type.

Common Cavity Size	
C082	C-08-2
C083	C-08-3
C102	C-10-2
C103	C-10-3
C162	C-16-2
C163	C-16-3

Product Type	
CB	Cavity Bodies

Size of Port 1 & 2	
4	1/4 inch (-4) Hose/Fitting size (**M**) port threads = M10 x 1.0
6	3/8 inch (-6) Hose/Fitting size (**M**) port threads = M14 x 1.5
8	1/2 inch (-8) Hose/Fitting size (**M**) port threads = M18 x 1.5
10*	5/8 inch (-10) Hose/Fitting size (**M**) port threads = M22 x 2.0
12	3/4 inch (-12) Hose/Fitting size (**M**) port threads = M27 x 2.0
16	1 inch (-16) Hose/Fitting size (**M**) port threads = M33 x 2.0

*10 size only available with SAE (S) or Metric (M).

Consult chart for port size availability with each cavity size, and for additional port sizes.

Port Threads	
P	NPTF ANSI B1.20.3
S	SAE ISO 11926; SAE 1926
B	BSPP ISO 1179
M	ISO ISO 6149
T	BSPT ISO 7

Daman Products Company, Inc. • 1811 North Home Street • Mishawaka, IN 46545-7267
Tel: 800.959.7841 574.259.7841 • Fax: 800.241.7664 • Email: sales@daman.com • www.daman.com

Daman®

Common Cavity Bodies - Aluminum & Ductile Iron

Part Number	A	B	C	D	E	F	G	H	I	J	K	L	M	N	O	P	Q	Port 1	Port 2	Port 3	Port 4
C082CB4	2.25	1.50	1.13	0.75	0.75	0.58	2.00	-	1.97	-	1.72	-	-	1.13	0.75	0.28	1.72	1/4	1/4	-	-
C082CB6	2.50	1.50	1.25	0.75	0.75	0.58	2.00	-	2.22	-	1.72	-	-	1.25	0.75	0.28	1.72	3/8	3/8	-	-
C082CB8	3.00	1.50	1.50	0.75	0.75	0.62	2.25	-	2.72	-	1.97	-	-	1.50	0.75	0.28	1.97	1/2	1/2	-	-
*C082CB10(S,M)	3.00	1.50	1.75	0.75	0.75	0.70	2.50	-	2.72	-	2.22	-	-	1.75	0.75	0.28	2.22	-10/M22	-10/M22	-	-
C082CB12	3.13	2.00	1.75	1.00	1.00	0.82	2.50	-	2.84	-	2.22	-	-	1.75	1.00	0.28	2.22	3/4	3/4	-	-
C082CB16	3.50	2.00	1.75	1.00	1.00	0.97	2.75	-	3.22	-	2.47	-	-	1.75	1.00	0.28	2.47	1	1	-	-
C083CB4	2.50	1.50	1.25	0.75	0.75	1.14	2.75	-	2.22	-	2.47	0.75	0.58	1.25	0.75	0.28	2.47	1/4	1/4	1/4	-
C083CB6	3.00	1.50	1.50	0.75	0.75	1.14	2.75	-	2.72	-	2.47	0.75	0.58	1.50	0.75	0.28	2.47	3/8	3/8	3/8	-
C083CB8	3.00	1.50	1.50	0.75	0.75	1.14	3.00	-	2.72	-	2.72	0.75	0.58	1.50	0.75	0.28	2.72	1/2	1/2	1/4	-
*C083CB10(S,M)	3.00	1.50	1.50	0.75	0.75	1.14	3.00	-	2.72	-	2.72	0.75	0.58	1.50	0.75	0.28	2.72	-10/M22	-10/M22	-6/M10	-
C083CB12	3.00	2.00	1.63	1.00	1.00	1.14	3.00	-	2.72	-	2.72	1.00	0.58	1.63	1.00	0.28	2.72	3/4	3/4	1/4	-
C083CB16	3.50	2.00	1.75	1.00	1.00	1.14	3.25	-	3.22	-	2.97	1.00	0.58	1.75	1.00	0.28	2.97	1	1	1/4	-
C102CB4	2.38	1.50	1.38	0.75	0.75	0.73	2.50	-	2.09	-	2.22	-	-	1.38	0.75	0.28	2.22	1/4	1/4	-	-
C102CB6	2.50	1.50	1.38	0.75	0.75	0.73	2.50	-	2.22	-	2.22	-	-	1.38	0.75	0.28	2.22	3/8	3/8	-	-
C102CB8	2.75	1.50	1.50	0.75	0.75	0.73	2.50	-	2.47	-	2.22	-	-	1.50	0.75	0.28	2.22	1/2	1/2	-	-
*C102CB10(S,M)	3.00	1.50	1.63	0.75	0.75	0.82	3.00	-	2.72	-	2.72	-	-	1.63	0.75	0.28	2.72	-10/M22	-10/M22	-	-
C102CB12	3.00	2.00	1.75	1.00	1.00	0.84	3.00	-	2.72	-	2.72	-	-	1.75	1.00	0.28	2.72	3/4	3/4	-	-
C102CB16	3.50	2.00	2.00	1.00	1.00	1.00	3.00	-	3.22	-	2.72	-	-	2.00	1.00	0.28	2.72	1	1	-	-
C103CB4	2.50	1.50	1.25	0.75	0.75	1.37	3.00	-	2.22	-	2.72	0.75	0.75	1.25	0.75	0.28	2.72	1/4	1/4	1/4	-
C103CB6	3.00	1.50	1.50	0.75	0.75	1.37	3.00	-	2.72	-	2.72	0.75	0.75	1.50	0.75	0.28	2.72	3/8	3/8	1/4	-
C103CB8	3.00	1.50	1.50	0.75	0.75	1.37	3.25	-	2.72	-	2.97	0.75	0.75	1.50	0.75	0.28	2.97	1/2	1/2	1/4	-
*C103CB10(S,M)	3.50	1.50	1.75	0.75	0.75	1.37	3.25	-	3.22	-	2.97	0.75	0.75	1.75	0.75	0.28	2.97	-10/M22	-10/M22	-6/M10	-
C103CB12	3.50	2.00	1.75	1.00	1.00	1.37	3.25	-	3.22	-	2.97	1.00	0.75	1.75	1.00	0.28	2.97	3/4	3/4	1/4	-
C103CB16	3.50	2.00	2.00	1.00	1.00	1.37	3.50	-	3.22	-	3.22	1.00	0.75	2.00	1.00	0.28	3.22	1	1	1/4	-
C162CB4	3.00	2.00	1.50	1.00	1.00	1.00	3.00	-	2.66	-	2.66	-	-	1.50	1.00	0.34	2.66	1/4	1/4	-	-
C162CB6	3.00	2.00	1.50	1.00	1.00	1.00	3.00	-	2.66	-	2.66	-	-	1.50	1.00	0.34	2.66	3/8	3/8	-	-
C162CB8	3.25	2.00	1.75	1.00	1.00	1.00	3.00	-	2.91	-	2.66	-	-	1.75	1.00	0.34	2.66	1/2	1/2	-	-
*C162CB10(S,M)	3.25	2.00	1.75	1.00	1.00	1.00	3.00	-	2.91	-	2.66	-	-	1.75	1.00	0.34	2.66	-10/M22	-10/M22	-	-
C162CB12	3.25	2.00	1.75	1.00	1.00	1.00	3.00	-	2.91	-	2.66	-	-	1.75	1.00	0.34	2.66	3/4	3/4	-	-
C162CB16	3.50	2.00	2.00	1.00	1.00	1.00	3.50	-	3.16	-	3.16	-	-	2.00	1.00	0.34	3.16	1	1	-	-
C163CB4	3.00	2.00	1.50	1.00	1.00	2.12	4.00	-	2.66	-	3.66	1.00	1.00	1.50	1.00	0.34	3.66	1/4	1/4	1/4	-
C163CB6	3.00	2.00	1.50	1.00	1.00	2.12	4.25	-	2.66	-	3.91	1.00	1.00	1.50	1.00	0.34	3.91	3/8	3/8	3/8	-
C163CB8	3.00	2.00	1.50	1.00	1.00	2.12	4.25	-	2.66	-	3.91	1.00	1.00	1.50	1.00	0.34	3.91	1/2	1/2	1/2	-
*C163CB10(S,M)	3.00	2.00	1.50	1.00	1.00	2.12	4.50	-	2.66	-	4.16	1.00	1.00	1.50	1.00	0.34	4.16	-10/M22	-10/M22	-8/M18	-
C163CB12	3.50	2.00	1.75	1.00	1.00	2.12	4.50	-	3.16	-	4.16	1.00	1.00	1.75	1.00	0.34	4.16	3/4	3/4	1/2	-
C163CB16	3.50	2.00	1.88	1.00	1.00	2.12	4.50	-	3.16	-	4.16	1.00	1.00	1.88	1.00	0.34	4.16	1	1	1/2	-

Specifications, descriptions, and dimensional data are subject to correction or change without notice or incurring obligation.
Download latest catalog page revisions at www.daman.com.

Daman Products Company, Inc. • 1811 North Home Street • Mishawaka, IN 46545-7267
Tel: 800.959.7841 574.259.7841 • Fax: 800.241.7664 • Email: sales@daman.com • www.daman.com

Common Cavity Bodies w/Gauge Ports - Al & Du Iron

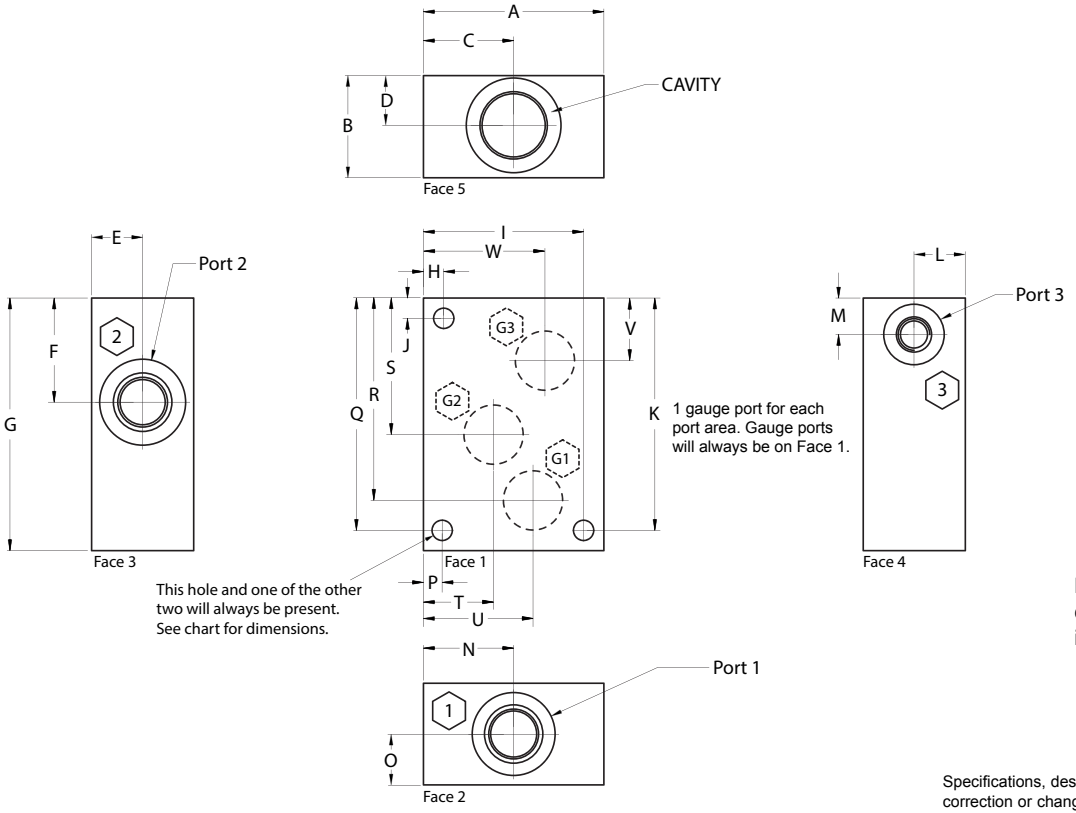

Mounting hardware for common cavity bodies (Aluminum or Ductile) is available on page 197.16.

Specifications, descriptions, and dimensional data are subject to correction or change without notice or incurring obligation. Download latest catalog page revisions at www.daman.com.

Ordering Information

For **coating options** see pages 245-246.

Material	Common Cavity Size	Product Type	Port Size	Port Threads	/	G

Material	
A	Aluminum - 6061-T6 3000† psi • 20.7 MPa
D	Ductile Iron - D4512 5000† psi • 34.5 MPa

† Working pressure should be considered in accordance with ISO 4413 to determine appropriate material type.

Common Cavity Size	
C082	C-08-2
C083	C-08-3
C102	C-10-2
C103	C-10-3
C162	C-16-2
C163	C-16-3

Product Type	
CB	Cavity Bodies

Size of Port 1 & 2	
4	1/4 inch (-4) Hose/Fitting size (**M**) port threads = M10 x 1.0
6	3/8 inch (-6) Hose/Fitting size (**M**) port threads = M14 x 1.5
8	1/2 inch (-8) Hose/Fitting size (**M**) port threads = M18 x 1.5
10*	5/8 inch (-10) Hose/Fitting size (**M**) port threads = M22 x 2.0
12	3/4 inch (-12) Hose/Fitting size (**M**) port threads = M27 x 2.0
16	1 inch (-16) Hose/Fitting size (**M**) port threads = M33 x 2.0

*10 size only available with SAE (S) or Metric (M).

Consult chart for port size availability with each cavity size, and for additional port sizes.

Port Threads	
P	NPTF ANSI B1.20.3
S	SAE ISO 11926; SAE 1926
B	BSPP ISO 1179
M	ISO ISO 6149
T	BSPT ISO 7

Gauge Port	
G	Gauge Port

0.250 NPTF (P option)
0.250 BSPP (B option)
0.250 BSPT (T option)
M10 x 1.0 (M option)
-6 SAE (S option)

Port "style" of gauge port is determined by selection of "port threads".

Daman Products Company, Inc. • 1811 North Home Street • Mishawaka, IN 46545-7267
Tel: 800.959.7841 574.259.7841 • Fax: 800.241.7664 • Email: sales@daman.com • www.daman.com

Daman®

Common Cavity Bodies w/Gauge Ports - Al & Du Iron

Part Number	A	B	C	D	E	F	G	H	I	J	K	L	M	N	O	P	Q	R	S	T	U	V	W	Port 1	Port 2	Port 3	Port 4
C082CB4/G	2.25	2.00	1.13	0.75	0.75	0.58	2.00	-	1.97	-	1.72	-	-	1.13	0.75	0.28	1.72	1.48	0.58	0.94	1.46	-	-	1/4	1/4	-	-
C082CB6/G	2.50	2.00	1.25	0.75	0.75	0.58	2.00	-	2.22	-	1.72	-	-	1.25	0.75	0.28	1.72	1.42	0.58	1.00	1.59	-	-	3/8	3/8	-	-
C082CB8/G	3.00	2.00	1.50	0.75	0.75	0.62	2.25	-	2.72	-	1.97	-	-	1.50	0.75	0.28	1.97	1.55	0.58	1.19	1.84	-	-	1/2	1/2	-	-
*C082CB10(S,M)/G	3.00	2.00	1.75	0.75	0.75	0.70	2.50	-	2.72	-	2.22	-	-	1.75	0.75	0.28	2.22	1.65	0.58	1.42	2.08	-	-	-10/M22	-10/M22	-	-
C082CB12/G	3.13	2.50	1.75	1.00	1.00	0.82	2.50	-	2.84	-	2.22	-	-	1.75	1.00	0.28	2.22	1.62	0.58	1.32	2.08	-	-	3/4	3/4	-	-
C082CB16/G	3.50	2.50	1.75	1.00	1.00	0.97	2.75	-	3.22	-	2.47	-	-	1.75	1.00	0.28	2.47	1.59	0.58	1.53	2.09	-	-	1	1	-	-
C083CB4/G	2.50	2.00	1.25	0.75	0.75	1.14	2.75	-	2.22	-	2.47	0.75	0.58	1.25	0.75	0.28	2.47	2.11	1.14	1.08	0.72	0.58	1.76	1/4	1/4	1/4	-
C083CB6/G	3.00	2.00	1.50	0.75	0.75	1.14	2.75	-	2.72	-	2.47	0.75	0.58	1.50	0.75	0.28	2.47	2.07	1.14	1.28	0.76	0.58	2.24	3/8	3/8	3/8	-
C083CB8/G	3.00	2.00	1.50	0.75	0.75	1.14	3.00	-	2.72	-	2.72	0.75	0.58	1.50	0.75	0.28	2.72	2.16	1.14	1.28	0.88	0.58	2.24	1/2	1/2	1/4	-
*C083CB10(S,M)/G	3.00	2.00	1.50	0.75	0.75	1.14	3.00	-	2.72	-	2.72	0.75	0.58	1.50	0.75	0.28	2.72	2.16	1.14	1.16	0.92	0.58	2.06	-10/M22	-10/M22	-6/M10	-
C083CB12/G	3.00	2.50	1.63	1.00	1.00	1.14	3.00	-	2.72	-	2.72	1.00	0.58	1.63	1.00	0.28	2.72	2.08	0.98	1.28	0.92	0.58	2.24	3/4	3/4	1/4	-
C083CB16/G	3.50	2.50	1.75	1.00	1.00	1.14	3.25	-	3.22	-	2.97	1.00	0.58	1.75	1.00	0.28	2.97	2.29	1.14	1.32	1.08	0.58	2.68	1	1	1/4	-
C102CB4/G	2.38	2.00	1.38	0.75	0.75	0.73	2.50	-	2.09	-	2.22	-	-	1.38	0.75	0.28	2.22	1.78	0.73	1.20	1.78	-	-	1/4	1/4	-	-
C102CB6/G	2.50	2.00	1.38	0.75	0.75	0.73	2.50	-	2.22	-	2.22	-	-	1.38	0.75	0.28	2.22	1.78	0.73	1.16	1.76	-	-	3/8	3/8	-	-
C102CB8/G	2.75	2.00	1.50	0.75	0.75	0.73	2.50	-	2.47	-	2.22	-	-	1.50	0.75	0.28	2.22	1.70	0.73	1.22	1.88	-	-	1/2	1/2	-	-
*C102CB10(S,M)/G	3.00	2.00	1.63	0.75	0.75	0.82	3.00	-	2.72	-	2.72	-	-	1.63	0.75	0.28	2.72	2.04	0.73	1.28	2.00	-	-	-10/M22	-10/M22	-	-
C102CB12/G	3.00	2.50	1.75	1.00	1.00	0.84	3.00	-	2.72	-	2.72	-	-	1.75	1.00	0.28	2.72	2.08	0.73	1.32	2.14	-	-	3/4	3/4	-	-
C102CB16/G	3.50	2.50	2.00	1.00	1.00	1.00	3.00	-	3.22	-	2.72	-	-	2.00	1.00	0.28	2.72	2.00	0.73	1.52	2.40	-	-	1	1	-	-
C103CB4/G	2.50	2.00	1.25	0.75	0.75	1.37	3.00	-	2.22	-	2.72	0.75	0.75	1.25	0.75	0.28	2.72	2.36	1.37	1.07	0.71	0.75	1.66	1/4	1/4	1/4	-
C103CB6/G	3.00	2.00	1.50	0.75	0.75	1.37	3.00	-	2.72	-	2.72	0.75	0.75	1.50	0.75	0.28	2.72	2.32	1.37	1.26	0.84	0.75	2.28	3/8	3/8	1/4	-
C103CB8/G	3.00	2.00	1.50	0.75	0.75	1.37	3.25	-	2.72	-	2.97	0.75	0.75	1.50	0.75	0.28	2.97	2.45	1.37	1.19	0.96	0.75	2.24	1/2	1/2	1/4	-
*C103CB10(S,M)/G	3.50	2.00	1.75	0.75	0.75	1.37	3.25	-	3.22	-	2.97	0.75	0.75	1.75	0.75	0.28	2.97	2.43	1.37	1.40	1.40	0.75	2.48	-10/M22	-10/M22	-6/M10	-
C103CB12/G	3.50	2.50	1.75	1.00	1.00	1.37	3.25	-	3.22	-	2.97	1.00	0.75	1.75	1.00	0.28	2.97	2.33	1.37	1.46	0.92	0.75	2.60	3/4	3/4	1/4	-
C103CB16/G	3.50	2.50	2.00	1.00	1.00	1.37	3.50	-	3.22	-	3.22	1.00	0.75	2.00	1.00	0.28	3.22	2.58	1.37	1.44	1.44	0.75	2.68	1	1	1/4	-
C162CB4/G	3.00	2.50	1.50	1.00	1.00	1.00	3.00	-	2.66	-	2.66	-	-	1.50	1.00	0.34	2.66	2.33	1.00	1.31	2.12	-	-	1/4	1/4	-	-
C162CB6/G	3.00	2.50	1.50	1.00	1.00	1.00	3.00	-	2.66	-	2.66	-	-	1.50	1.00	0.34	2.66	2.28	1.00	1.26	2.12	-	-	3/8	3/8	-	-
C162CB8/G	3.25	2.50	1.75	1.00	1.00	1.00	3.00	-	2.91	-	2.66	-	-	1.75	1.00	0.34	2.66	2.28	1.00	1.42	2.36	-	-	1/2	1/2	-	-
*C162CB10(S,M)/G	3.25	2.50	1.75	1.00	1.00	1.00	3.00	-	2.91	-	2.66	-	-	1.75	1.00	0.34	2.66	2.32	1.00	1.36	2.36	-	-	-10/M22	-10/M22	-	-
C162CB12/G	3.25	2.50	1.75	1.00	1.00	1.00	3.00	-	2.91	-	2.66	-	-	1.75	1.00	0.34	2.66	2.30	1.12	1.30	2.37	-	-	3/4	3/4	-	-
C162CB16/G	3.50	2.50	2.00	1.00	1.00	1.00	3.50	-	3.16	-	3.16	-	-	2.00	1.00	0.34	3.16	2.42	1.12	1.44	2.60	-	-	1	1	-	-
C163CB4/G	3.00	2.50	1.50	1.00	1.00	2.12	4.00	-	2.66	-	3.66	1.00	1.00	1.50	1.00	0.34	3.66	3.36	2.12	1.32	0.94	1.00	2.12	1/4	1/4	1/4	-
C163CB6/G	3.00	2.50	1.50	1.00	1.00	2.12	4.25	-	2.66	-	3.91	1.00	1.00	1.50	1.00	0.34	3.91	3.41	2.12	1.26	0.94	1.00	2.12	3/8	3/8	3/8	-
C163CB8/G	3.00	2.50	1.50	1.00	1.00	2.12	4.25	-	2.66	-	3.91	1.00	1.00	1.50	1.00	0.34	3.91	3.45	2.12	1.19	0.94	1.00	2.12	1/2	1/2	1/2	-
*C163CB10(S,M)/G	3.00	2.50	1.50	1.00	1.00	2.12	4.50	-	2.66	-	4.16	1.00	1.00	1.50	1.00	0.34	4.16	3.46	2.12	1.16	0.94	1.00	2.12	-10/M22	-10/M22	-8/M18	-
C163CB12/G	3.50	2.50	1.75	1.00	1.00	2.12	4.50	-	3.16	-	4.16	1.00	1.00	1.75	1.00	0.34	4.16	3.50	2.12	1.34	1.18	1.00	2.36	3/4	3/4	1/2	-
C163CB16/G	3.50	2.50	1.88	1.00	1.00	2.12	4.50	-	3.16	-	4.16	1.00	1.00	1.88	1.00	0.34	4.16	3.54	2.12	1.31	1.31	1.00	2.50	1	1	1/2	-

Specifications, descriptions, and dimensional data are subject to correction or change without notice or incurring obligation.
Download latest catalog page revisions at www.daman.com.

Daman Products Company, Inc. • 1811 North Home Street • Mishawaka, IN 46545-7267
Tel: 800.959.7841 574.259.7841 • Fax: 800.241.7664 • Email: sales@daman.com • www.daman.com

Daman®

Sun Cavity Bodies Mounting Hardware

Part Number	Mounting Bolts
*T10ACB6[P,S,B,M,T] *T11ACB8[P,S,B,M,T] *T10ACB6[P,S,B,M,T] *T21ACB8[P,S,B,M,T] *T31ACB8[P,S,B,M,T] *T61ACB8[P,S,B,M,T] *T162ACB6[P,S,B,M,T] *T162ACB8[P,S,B,M,T] *T163ACB6[P,S,B,M,T] *T163ACB8[P,S,B,M,T]	[P,S] - UNC 10-24 x 1.50 long [B,M,T] - ISO M5 x 40mm long
*T3ACB8[P,S,B,M,T] *T5ACB8[P,S,B,M,T] *T8ACB6[P,S,B,M,T] *T9ACB6[P,S,B,M,T]	[P,S] - UNC 10-24 x 1.75 long [B,M,T] - ISO M5 x 45mm long
*T2ACB8[P,S,B,M,T]	[P,S] - UNC 0.250-20 x 2.00 long [B,M,T] - ISO M6 x 45mm long
*T3ACB12[P,S,B,M,T] *T5ACB12[P,S,B,M,T] *T10ACB12[P,S,B,M,T] *T13ACB12[P,S,B,M,T] *T9ACB4[P,S,B,M,T]/G *T9ACB6[P,S,B,M,T]/G *T11ACB4[P,S,B,M,T]/G *T11ACB6[P,S,B,M,T]/G *T11ACB8[P,S,B,M,T]/G *T13ACB4[P,S,B,M,T]/G *T13ACB6[P,S,B,M,T]/G *T162ACB8[P,S,B,M,T]/G *T163ACB4[P,S,B,M,T]/G *T163ACB6[P,S,B,M,T]/G *T163ACB8[P,S,B,M,T]/G	[P,S] - UNC 10-24 x 2.00 long [B,M,T] - ISO M5 x 50mm long
*T3ACB4[P,S,B,M,T]/G *T3ACB6[P,S,B,M,T]/G *T3ACB8[P,S,B,M,T]/G *T5ACB4[P,S,B,M,T]/G *T5ACB6[P,S,B,M,T]/G *T5ACB8[P,S,B,M,T]/G *T8ACB4[P,S,B,M,T]/G *T8ACB6[P,S,B,M,T]/G *T10ACB4[P,S,B,M,T]/G *T10ACB6[P,S,B,M,T]/G *T10ACB8[P,S,B,M,T]/G *T10ACB12[P,S,B,M,T]/G *T13ACB8[P,S,B,M,T]/G *T13ACB12[P,S,B,M,T]/G *T21ACB4[P,S,B,M,T]/G *T21ACB6[P,S,B,M,T]/G *T21ACB8[P,S,B,M,T]/G *T162ACB4[P,S,B,M,T]/G *T162ACB6[P,S,B,M,T]/G	[P,S] - UNC 10-24 x 2.25 long [B,M,T] - ISO M5 x 60mm long
*T2ACB12[P,S,B,M,T] *T22ACB12[P,S,B,M,T] *T32ACB12[P,S,B,M,T] *T52ACB12[P,S,B,M,T] *T62ACB12[P,S,B,M,T] *T2ACB4[P,S,B,M,T]/G *T2ACB6[P,S,B,M,T]/G *T2ACB8[P,S,B,M,T]/G *T32ACB6[P,S,B,M,T]/G *T32ACB8[P,S,B,M,T]/G *T32ACB12[P,S,B,M,T]/G	[P,S] - UNC 0.250-20 x 2.50 long [B,M,T] - ISO M6 x 60mm long

Part Number	Mounting Bolts
*T3ACB12[P,S,B,M,T]/G *T5ACB12[P,S,B,M,T]/G *T31ACB4[P,S,B,M,T]/G *T31ACB6[P,S,B,M,T]/G *T31ACB8[P,S,B,M,T]/G *T61ACB4[P,S,B,M,T]/G *T61ACB6[P,S,B,M,T]/G *T61ACB8[P,S,B,M,T]/G	[P,S] - UNC 10-24 x 2.50 long [B,M,T] - ISO M5 x 70mm long
*T2ACB12[P,S,B,M,T]/G *T22ACB6[P,S,B,M,T]/G *T22ACB8[P,S,B,M,T]/G *T22ACB12[P,S,B,M,T]/G *T52ACB6[P,S,B,M,T]/G *T52ACB8[P,S,B,M,T]/G *T52ACB12[P,S,B,M,T]/G *T62ACB6[P,S,B,M,T]/G *T62ACB8[P,S,B,M,T]/G *T62ACB12[P,S,B,M,T]/G	[P,S] - UNC 0.250-20 x 2.75 long [B,M,T] - ISO M6 x 70mm long
*T33ACB12[P,S,B,M,T]/G *T33ACB16[P,S,B,M,T]/G *T63ACB12[P,S,B,M,T]/G *T63ACB16[P,S,B,M,T]/G	[P,S] - UNC 0.312-18 x 2.75 long [B,M,T] - ISO M8 x 70mm long
*T16ACB20[P,S,B,M,T] *T17ACB20[P,S,B,M,T] *T23ACB20[P,S,B,M,T] *T16ACB12[P,S,B,M,T]/G *T16ACB16[P,S,B,M,T]/G *T16ACB20[P,S,B,M,T]/G *T17ACB12[P,S,B,M,T]/G *T17ACB16[P,S,B,M,T]/G *T17ACB20[P,S,B,M,T]/G *T23ACB12[P,S,B,M,T]/G *T23ACB16[P,S,B,M,T]/G *T23ACB20[P,S,B,M,T]/G	[P,S] - UNC 0.250-20 x 3.00 long [B,M,T] - ISO M6 x 70mm long
*T18ACB20[P,S,B,M,T]	[P,S] - UNC 0.312-18 x 3.00 long [B,M,T] - ISO M8 x 80mm long
*T18ACB12[P,S,B,M,T]/G *T18ACB16[P,S,B,M,T]/G *T18ACB20[P,S,B,M,T]/G	[P,S] - UNC 0.312-18 x 3.25 long [B,M,T] - ISO M8 x 90mm long
*T19ACB20[P,S,B,M,T] *T24ACB20[P,S,B,M,T] *T33ACB20[P,S,B,M,T] *T53ACB16[P,S,B,M,T] *T63ACB20[P,S,B,M,T] *T64ACB20[P,S,B,M,T] *T19ACB16[P,S,B,M,T]/G *T19ACB20[P,S,B,M,T]/G *T24ACB16[P,S,B,M,T]/G *T24ACB20[P,S,B,M,T]/G *T33ACB20[P,S,B,M,T]/G *T53ACB12[P,S,B,M,T]/G *T53ACB16[P,S,B,M,T]/G *T63ACB20[P,S,B,M,T]/G *T64ACB16[P,S,B,M,T]/G *T64ACB20[P,S,B,M,T]/G	[P,S] - UNC 0.312-18 x 3.50 long [B,M,T] - ISO M8 x 90mm long
*T54ACB20[P,S,B,M,T] *T54ACB20[P,S,B,M,T]/G	[P,S] - UNC 0.312-18 x 4.50 long [B,M,T] - ISO M8 x 120mm long

Daman Products Company, Inc. • 1811 North Home Street • Mishawaka, IN 46545-7267
Tel: 800.959.7841 574.259.7841 • Fax: 800.241.7664 • Email: sales@daman.com • www.daman.com

Common Cavity Bodies Mounting Hardware

Part Number	Mounting Bolts
*C082CB4[P,S,B,M,T] *C082CB6[P,S,B,M,T] *C082CB8[P,S,B,M,T] *C082CB10[S,M] *C083CB4[P,S,B,M,T] *C083CB6[P,S,B,M,T] *C083CB8[P,S,B,M,T] *C083CB10[S,M] *C102CB4[P,S,B,M,T] *C102CB6[P,S,B,M,T] *C102CB8[P,S,B,M,T] *C102CB10[S,M] *C103CB4[P,S,B,M,T] *C103CB6[P,S,B,M,T] *C103CB8[P,S,B,M,T] *C103CB10[S,M]	[P,S] - UNC 0.250-20 x 2.00 long [B,M,T] - ISO M6 x 50mm long
*C082CB12[P,S,B,M,T] *C082CB16[P,S,B,M,T] *C083CB12[P,S,B,M,T] *C083CB16[P,S,B,M,T] *C102CB12[P,S,B,M,T] *C102CB16[P,S,B,M,T] *C103CB12[P,S,B,M,T] *C103CB16[P,S,B,M,T] *C082CB4[P,S,B,M,T]/G *C082CB6[P,S,B,M,T]/G *C082CB8[P,S,B,M,T]/G *C082CB10[S,M]/G *C083CB4[P,S,B,M,T]/G *C083CB6[P,S,B,M,T]/G *C083CB8[P,S,B,M,T]/G *C083CB10[S,M]/G *C102CB4[P,S,B,M,T]/G *C102CB6[P,S,B,M,T]/G *C102CB8[P,S,B,M,T]/G *C102CB10[S,M]/G *C103CB4[P,S,B,M,T]/G *C103CB6[P,S,B,M,T]/G *C103CB8[P,S,B,M,T]/G *C103CB10[S,M]/G	[P,S] - UNC 0.250-20 x 2.50 long [B,M,T] - ISO M6 x 65mm long
*C162CB4[P,S,B,M,T] *C162CB6[P,S,B,M,T] *C162CB8[P,S,B,M,T] *C162CB10[S,M] *C162CB12[P,S,B,M,T] *C162CB16[P,S,B,M,T] *C163CB4[P,S,B,M,T] *C163CB6[P,S,B,M,T] *C163CB8[P,S,B,M,T] *C163CB10[S,M] *C163CB12[P,S,B,M,T] *C163CB16[P,S,B,M,T]	[P,S] - UNC 0.312-18 x 2.50 long [B,M,T] - ISO M8 X 65mm long

Part Number	Mounting Bolts
*C082CB12[P,S,B,M,T]/G *C082CB16[P,S,B,M,T]/G *C083CB12[P,S,B,M,T]/G *C083CB16[P,S,B,M,T]/G *C102CB12[P,S,B,M,T]/G *C102CB16[P,S,B,M,T]/G *C103CB12[P,S,B,M,T]/G *C103CB16[P,S,B,M,T]/G	[P,S] - UNC 0.250-20 x 3.00 long [B,M,T] - ISO M6 x 75mm long
*C162CB4[P,S,B,M,T]/G *C162CB6[P,S,B,M,T]/G *C162CB8[P,S,B,M,T]/G *C162CB10[S,M]/G *C162CB12[P,S,B,M,T]/G *C162CB16[P,S,B,M,T]/G *C163CB4[P,S,B,M,T]/G *C163CB6[P,S,B,M,T]/G *C163CB8[P,S,B,M,T]/G *C163CB10[S,M]/G *C163CB12[P,S,B,M,T]/G *C163CB16[P,S,B,M,T]/G	[P,S] - UNC 0.312-18 x 3.00 long [B,M,T] - ISO M8 X 75mm long

Flange Mount Bodies ☞

Daman Products Company, Inc. • 1811 North Home Street • Mishawaka, IN 46545-7267
Tel: 800.959.7841 574.259.7841 • Fax: 800.241.7664 • Email: sales@daman.com • www.daman.com

Daman®

Code 61 Flange Mount Bodies

Flange Mount Body with 2-port Cavity

Flange interface seal is supplied. See chart.
Plug for GA Port (-6 SAE) is supplied.
(4) mounting bolts are user supplied and must pass through flange and valve body to thread into customers flange interface.

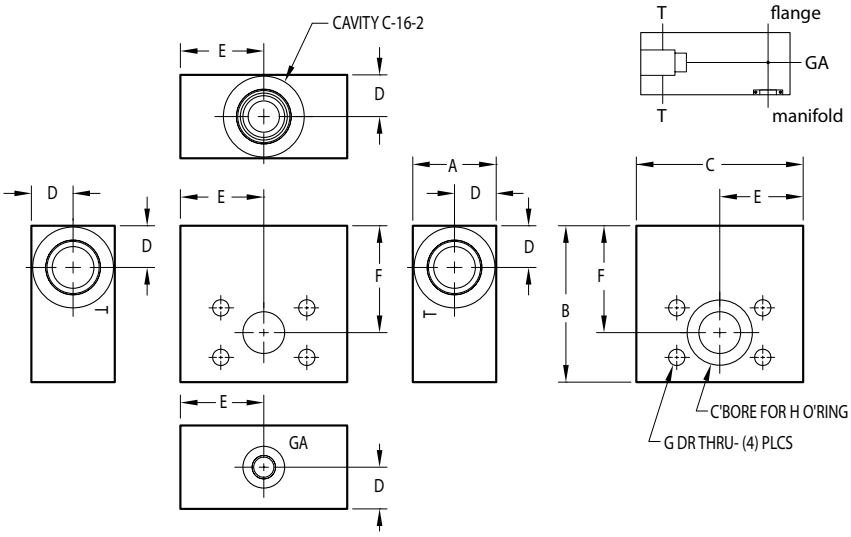

PART NO.	A	B	C	D
*FMBC162**12F**6116S	2.00 [50.8]	3.50 [88.9]	4.00 [101.6]	1.00 [25.4]
*FMBC162**16F**6116S	2.00 [50.8]	3.75 [95.3]	4.00 [101.6]	1.00 [25.4]
*FMBC162**20F**6116S	2.00 [50.8]	4.25 [108.0]	4.00 [101.6]	1.00 [25.4]
*FMBC162**24F**6116S	2.00 [50.8]	4.63 [117.5]	4.00 [101.6]	1.00 [25.4]

PART NO.	E	F	G	H
*FMBC162**12F**6116S	2.00 [50.8]	2.44 [61.9]	0.41 [10.3]	-214
*FMBC162**16F**6116S	2.00 [50.8]	2.56 [65.1]	0.41 [10.3]	-219
*FMBC162**20F**6116S	2.00 [50.8]	2.75 [69.9]	0.47 [11.9]	-222
*FMBC162**24F**6116S	2.00 [50.8]	2.88 [73.0]	0.53 [13.5]	-225

Specifications, descriptions, and dimensional data are subject to correction or change without notice or incurring obligation. Download latest catalog page revisions at www.daman.com.

Ordering Information

For **coating options** see pages 245-246.

Material	Product Type	Cavity Type	Cavity Size	Flange Size	Flange Rating	Port Threads

Material

A	Aluminum - 6061-T6 3000† psi • 20.7 MPa
D	Ductile Iron - D4512 5000† psi • 34.5 MPa

† Working pressure should be considered in accordance with ISO 4413 to determine appropriate material type.

Cavity Type

C	Industry Standard Common Cavity

Flange Size

12F	ISO 6162 - DN19 Split Flange SAE Size 12 (0.75") Flange
16F	ISO 6162 - DN25 Split Flange SAE Size 16 (1.00") Flange
20F	ISO 6162 - DN32 Split Flange SAE Size 20 (1.25") Flange
24F	ISO 6162 - DN38 Split Flange SAE Size 24 (1.50") Flange

Port Threads

16S	-16 SAE "T" Ports -6 SAE "GA" Port ISO 11926; SAE 1926

Product Type

FMB	Flange Mount Body

Cavity Size

162	Cavity C-16-2

Flange Rating

61	ISO 6162 - 2.5 to 35 MPa • SAE code 61

Daman Products Company, Inc. • 1811 North Home Street • Mishawaka, IN 46545-7267
Tel: 800.959.7841 574.259.7841 • Fax: 800.241.7664 • Email: sales@daman.com • www.daman.com

Daman®

Code 62 Flange Mount Bodies

Flange Mount Body with 2-port Cavity

Flange interface seal is supplied. See chart.
Plug for GA Port (-6 SAE) is supplied.
(4) mounting bolts are user supplied and must pass through flange and valve body to thread into customers flange interface.

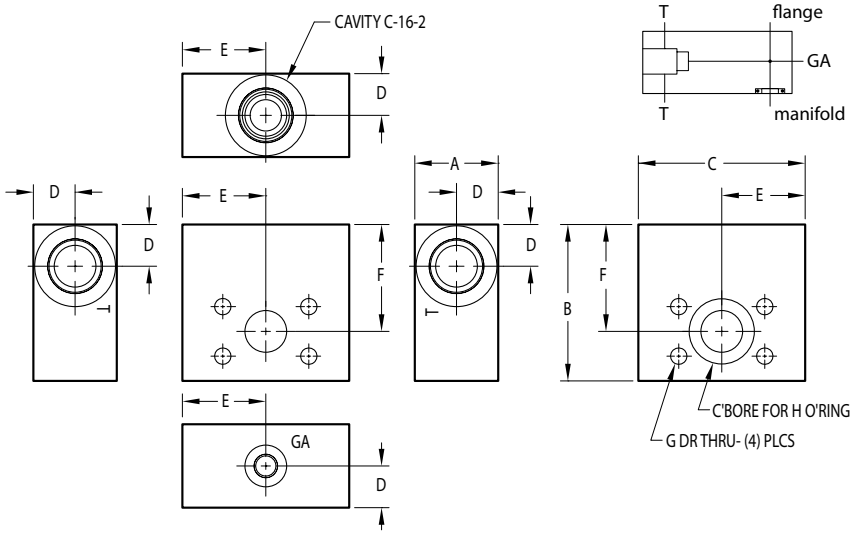

PART NO.	A	B	C	D
*FMBC162**16F**6216S	2.00 [50.8]	4.13 [104.8]	4.00 [101.6]	1.00 [25.4]
*FMBC162**20F**6216S	2.00 [50.8]	4.38 [111.1]	4.00 [101.6]	1.00 [25.4]
*FMBC162**24F**6216S	2.00 [50.8]	4.88 [123.8]	4.50 [114.3]	1.00 [25.4]

PART NO.	E	F	G	H
*FMBC162**16F**6216S	2.00 [50.8]	2.69 [68.3]	0.47 [11.9]	-219
*FMBC162**20F**6216S	2.00 [50.8]	2.81 [71.4]	0.53 [13.5]	-222
*FMBC162**24F**6216S	2.25 [57.2]	2.97 [75.4]	0.66 [16.7]	-225

Specifications, descriptions, and dimensional data are subject to correction or change without notice or incurring obligation. Download latest catalog page revisions at www.daman.com.

Ordering Information

For **coating options** see pages 245-246.

Material	Product Type	Cavity Type	Cavity Size	Flange Size	Flange Rating	Port Threads

Material

A	Aluminum - 6061-T6 3000† psi • 20.7 MPa
D	Ductile Iron - D4512 5000† psi • 34.5 MPa

† Working pressure should be considered in accordance with ISO 4413 to determine appropriate material type.

Cavity Type

C	Industry Standard Common Cavity

Flange Size

16F	ISO 6162 - DN25 Split Flange SAE Size 16 (1.00") Flange
20F	ISO 6162 - DN32 Split Flange SAE Size 20 (1.25") Flange
24F	ISO 6162 - DN38 Split Flange SAE Size 24 (1.50") Flange

Port Threads

16S	-16 SAE "T" Ports -6 SAE "GA" Port ISO 11926; SAE 1926

Product Type

FMB	Flange Mount Body

Cavity Size

162	Cavity C-16-2

Flange Rating

62	ISO 6162 -40 MPa • SAE code 62

Daman Products Company, Inc. • 1811 North Home Street • Mishawaka, IN 46545-7267
Tel: 800.959.7841 574.259.7841 • Fax: 800.241.7664 • Email: sales@daman.com • www.daman.com

LARGE MANIFOLD SURFACE TREATMENTS

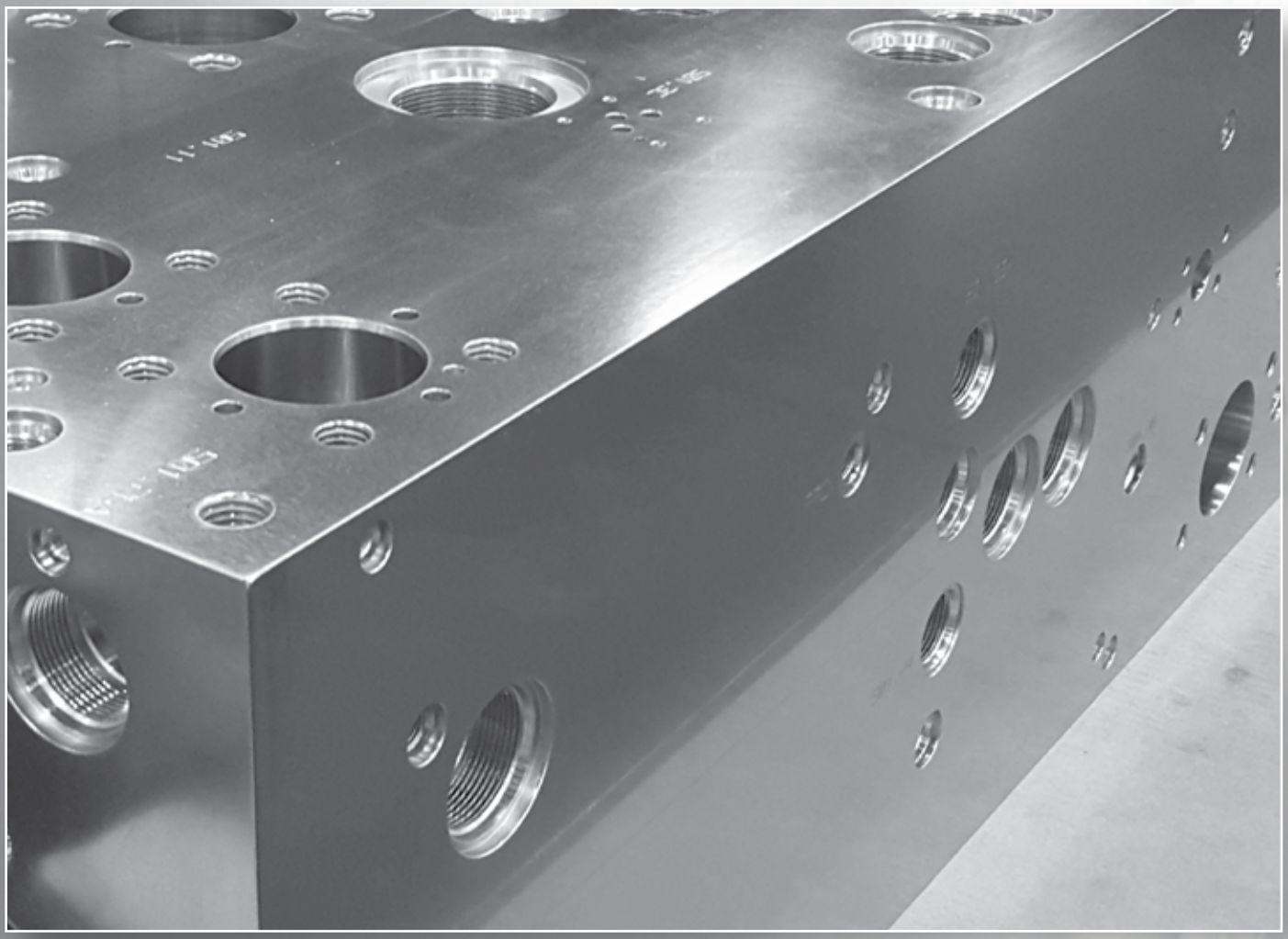

Daman®

HEADER AND JUNCTION BLOCKS

Header Manifolds - 0° Design	Pages 202-204
Header Manifolds - 90° Design	Pages 206-208
Header Manifolds - 180° Design	Pages 210-212
Junction Manifolds - 90° Design	Pages 214-216
Junction Manifolds - 180° Design	Pages 218-220
Junction Manifolds - 270° Design	Pages 222-224

Header Block

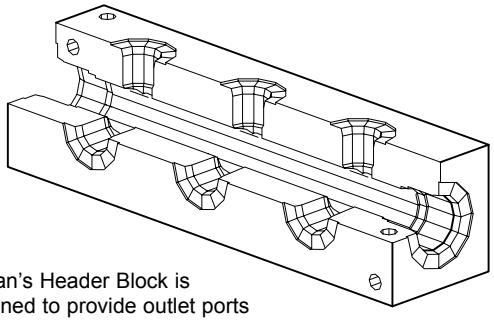

Daman's Header Block is designed to provide outlet ports that are common to one header (thru) port. The header port is always one size larger than the outlet ports.

Junction Block

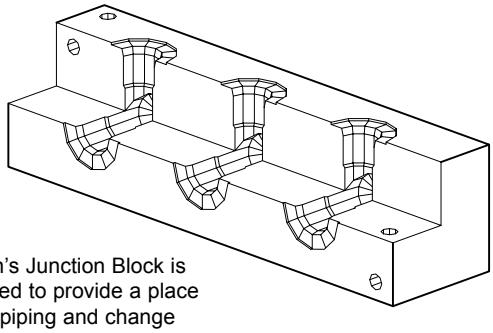

Daman's Junction Block is designed to provide a place to join piping and change direction or split / combine with other lines.

Available Header Block Configurations

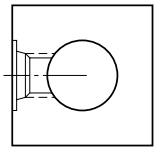

0º design
See pages 202-204

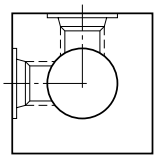

90º design
See pages 206-208

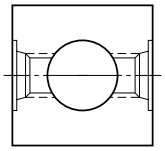

180º design
See pages 210-212

Available Junction Block Configurations

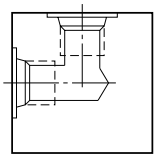

90º design
See pages 214-216

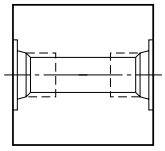

180º design
See pages 218-220

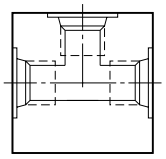

270º design
See pages 222-224

Header Block Mounting Hardware	Port Size	Mounting Bolts**
	01P 01T	(2) or (3) UNC #10-24 x 1.50 long SHCS M5 x 0.8 x 40mm long SHCS
	02P 02[B,T]	(2) or (3) UNC 0.25-20 x 2.00 long SHCS M6 x 1.0 x 50mm long SHCS
	04* 06S 06M	(2) or (3) UNC 0.25-20 x 2.25 long SHCS M6 x 1.0 x 60mm long SHCS
	06/08P 06/08[B,T]	(2) or (3) UNC 0.25-20 x 2.50 long SHCS M6 x 1.0 x 65mm long SHCS
	08S 08M	(2) or (3) UNC 0.25-20 x 2.75 long SHCS M6 x 1.0 x 70mm long SHCS
	12*	(2) or (3) UNC 0.31-18 x 3.00 long SHCS M8 x 1.25 x 75mm long SHCS
	16*	(2) or (3) UNC 0.38-16 x 3.50 long SHCS M10 x 1.50 x 90mm long SHCS
	20*	(2) or (3) UNC 0.50-13 x 4.50 long SHCS M12 x 1.75 x 120mm long SHCS
	24P 24[B,T]	(2) or (3) UNC 0.50-13 x 5.00 long SHCS M12 x 1.75 x 130mm long SHCS
	24S 24M	(2) or (3) UNC 0.50-13 x 5.50 long SHCS M12 x 1.75 x 140mm long SHCS

Junction Block Mounting Hardware	Port Size	Mounting Bolts**
	04*	(2) or (3) UNC 0.25-20 x 2.25 long SHCS M6 x 1.0 x 60mm long SHCS
	06*	(2) or (3) UNC 0.25-20 x 2.25 long SHCS M6 x 1.0 x 60mm long SHCS
	08*	(2) or (3) UNC 0.25-20 x 2.50 long SHCS M6 x 1.0 x 65mm long SHCS
	12*	(2) or (3) UNC 0.31-18 x 3.00 long SHCS M8 x 1.25 x 75mm long SHCS
	16*	(2) or (3) UNC 0.38-16 x 3.50 long SHCS M10 x 1.5 x 90mm long SHCS
	20*	(2) or (3) UNC 0.50-13 x 4.50 long SHCS M12 x 1.75 x 120mm long SHCS
	24*	(2) or (3) UNC 0.50-13 x 5.00 long SHCS M12 x 1.75 x 130mm long SHCS

*B,M,T come with metric bolts. P, S come with UNC bolts.
**Mounting bolts not included for stainless steel products.

Daman Products Company, Inc. • 1811 North Home Street • Mishawaka, IN 46545-7267
Tel: 800.959.7841 574.259.7841 • Fax: 800.241.7664 • Email: sales@daman.com • www.daman.com

Header Manifolds - 0° Design

Header block mounting hardware is supplied, except for stainless.
See page 201 for itemized list.

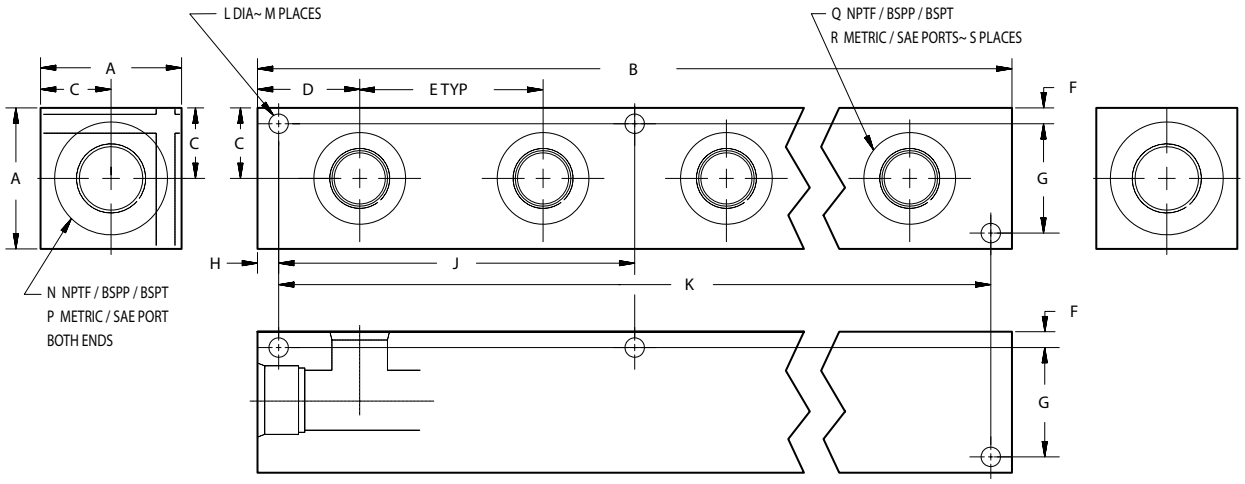

Specifications, descriptions, and dimensional data are subject to correction or change without notice or incurring obligation. Download latest catalog page revisions at www.daman.com.

Ordering Information

Material	Product Type	Side Port Layout	No. of Stations	Side Port Threads

For **coating options** see pages 245-246.

Material

A	Aluminum - 6061-T6 3000† psi • 20.7 MPa
D	Ductile Iron - D4512 5000† psi • 34.5 MPa
S*	Stainless Steel - 17-4 5000† psi • 34.5 MPa

† Working pressure should be considered in accordance with ISO 4413 to determine appropriate material type.

*All stainless steel products are passivated.

Product Type

H	Header Block

Side Port Layout

000	Ports out one side only

No. of Stations

01 thru 10	Check chart on next page to verify station-port size combinations

Side Port Threads

---	01P	01T	B = BSPP • ISO 1179, BS 2779 P = NPTF • ANSI B1.20.3 T = BSPT • ISO 7, BS 21	04M*	04S*	M = METRIC • ISO 6149 S = SAE • ISO 11926, SAE 1926
02B	02P	02T		06M*	06S*	
04B*	04P*	04T*		08M*	08S*	
06B	06P	06T		12M**	12S**	
08B*	08P*	08T*		16M**	16S**	
12B**	12P**	12T**		20M**	20S**	
16B**	16P**	16T**		24M	24S	
20B**	20P**	20T**		Check chart on next page to verify station-port size combinations		
24B	24P	24T				

* Available in Stainless Steel
** Available in Stainless Steel, 1-5 stations
Note: Pipe ports in stainless can gall.

Daman Products Company, Inc. • 1811 North Home Street • Mishawaka, IN 46545-7267
Tel: 800.959.7841 574.259.7841 • Fax: 800.241.7664 • Email: sales@daman.com • www.daman.com

Header Manifolds - 0° Design

PART NO.	A	B	C	D	E	F	G	H	J	K	L	M	N	P	Q	R	S
*H0000101[P,T]	1.25	2.00	0.63	1.00	1.25	0.17	0.91	0.31	--	1.38	0.22	4	1/8	--	1/16	--	1
*H0000201[P,T]		3.25							--	2.63		4					2
*H0000301[P,T]		4.50							--	3.88		4					3
*H0000401[P,T]		5.75							--	5.13		4					4
*H0000501[P,T]		7.00							--	6.38		4					5
*H0000601[P,T]		8.25							3.81	7.63		6					6
*H0000701[P,T]		9.50							5.06	8.88		6					7
*H0000801[P,T]		10.75							5.06	10.13		6					8
*H0000901[P,T]		12.00							6.31	11.38		6					9
*H0001001[P,T]		13.25							6.31	12.63		6					10
*H0000102[B,P,T]	1.50	2.25	0.75	1.13	1.38	0.25	1.00	0.31	--	1.63	0.28	4	1/4	--	1/8	--	1
*H0000202[B,P,T]		3.63							--	3.00		4					2
*H0000302[B,P,T]		5.00							--	4.38		4					3
*H0000402[B,P,T]		6.38							--	5.75		4					4
*H0000502[B,P,T]		7.75							4.25	7.13		6					5
*H0000602[B,P,T]		9.13							4.25	8.50		6					6
*H0000702[B,P,T]		10.50							5.63	9.88		6					7
*H0000802[B,P,T]		11.88							5.63	11.25		6					8
*H0000902[B,P,T]		13.25							7.00	12.63		6					9
*H0001002[B,P,T]		14.63							7.00	14.00		6					10
H0000104	1.75	2.13	0.88	1.06	1.75	0.25	1.25	0.31	--	1.50	0.28	4	3/8	-6 or M14x1.5	1/4	-4 or M10x1.0	1
H0000204		3.88							--	3.25		4					2
H0000304		5.63							--	5.00		4					3
H0000404		7.38							--	6.75		4					4
H0000504		9.13							5.13	8.50		6					5
H0000604		10.88							5.13	10.25		6					6
H0000704		12.63							6.88	12.00		6					7
H0000804		14.38							6.88	13.75		6					8
H0000904		16.13							8.63	15.50		6					9
H0001004		17.88							8.63	17.25		6					10
*H0000106[B,P,T]	2.00	3.00	1.00	1.50	2.00	0.25	1.50	0.31	--	2.38	0.28	4	1/2	--	3/8	--	1
*H0000206[B,P,T]		5.00							--	4.38		4					2
*H0000306[B,P,T]		7.00							--	6.38		4					3
*H0000406[B,P,T]		9.00							--	8.38		4					4
*H0000506[B,P,T]		11.00							6.19	10.38		6					5
*H0000606[B,P,T]		13.00							6.19	12.38		6					6
*H0000706[B,P,T]		15.00							8.19	14.38		6					7
*H0000806[B,P,T]		17.00							8.19	16.38		6					8
*H0000906[B,P,T]		19.00							10.19	18.38		6					9
*H0001006[B,P,T]		21.00							10.19	20.38		6					10
*H0000106[M,S]	1.75	3.00	0.88	1.50	2.00	0.25	1.25	0.31	--	2.38	0.28	4	--	-8 or M18x1.5	--	-6 or M14x1.5	1
*H0000206[M,S]		5.00							--	4.38		4					2
*H0000306[M,S]		7.00							--	6.38		4					3
*H0000406[M,S]		9.00							--	8.38		4					4
*H0000506[M,S]		11.00							6.19	10.38		6					5
*H0000606[M,S]		13.00							6.19	12.38		6					6
*H0000706[M,S]		15.00							8.19	14.38		6					7
*H0000806[M,S]		17.00							8.19	16.38		6					8
*H0000906[M,S]		19.00							10.19	18.38		6					9
*H0001006[M,S]		21.00							10.19	20.38		6					10
*H0000108[B,P,T]	2.00	3.00	1.00	1.50	2.38	0.25	1.50	0.31	--	2.38	0.28	4	3/4	--	1/2	--	1
*H0000208[B,P,T]		5.38							--	4.75		4					2
*H0000308[B,P,T]		7.75							--	7.13		4					3
*H0000408[B,P,T]		10.13							--	9.50		4					4
*H0000508[B,P,T]		12.50							7.13	11.88		6					5
*H0000608[B,P,T]		14.88							7.13	14.25		6					6
*H0000708[B,P,T]		17.25							9.50	16.63		6					7
*H0000808[B,P,T]		19.63							9.50	19.00		6					8
*H0000908[B,P,T]		22.00							11.88	21.38		6					9
*H0001008[B,P,T]		24.38							11.88	23.75		6					10

Chart continued on next page

Daman Products Company, Inc. • 1811 North Home Street • Mishawaka, IN 46545-7267
Tel: 800.959.7841 574.259.7841 • Fax: 800.241.7664 • Email: sales@daman.com • www.daman.com

Header Manifolds - 0° Design (cont)

PART NO.	A	B	C	D	E	F	G	H	J	K	L	M	N	P	Q	R	S
*H0000108[M,S]	2.25	3.00	1.13	1.50	2.38	0.25	1.75	0.31	--	2.38	0.28	4	--	-12 or M27x2.0	--	-8 or M18x1.5	1
*H0000208[M,S]		5.38							--	4.75		4					2
*H0000308[M,S]		7.75							--	7.13		4					3
*H0000408[M,S]		10.13							--	9.50		4					4
*H0000508[M,S]		12.50							7.13	11.88		6					5
*H0000608[M,S]		14.88							7.13	14.25		6					6
*H0000708[M,S]		17.25							9.50	16.63		6					7
*H0000808[M,S]		19.63							9.50	19.00		6					8
*H0000908[M,S]		22.00							11.88	21.38		6					9
*H0001008[M,S]		24.38							11.88	23.75		6					10
H0000112	2.50	3.63	1.25	1.81	3.25	0.28	1.94	0.38	--	2.88	0.34	4	1"	-16 or M33x2.0	3/4	-12 or M27x2.0	1
H0000212		6.88							--	6.13		4					2
H0000312		10.13							--	9.38		4					3
H0000412		13.38							--	12.63		4					4
H0000512		16.63							9.56	15.88		6					5
H0000612		19.88							9.56	19.13		6					6
H0000712		23.13							12.81	22.38		6					7
H0000812		26.38							12.81	25.63		6					8
H0000912		29.63							16.06	28.88		6					9
H0001012		32.88							16.06	32.13		6					10
H0000116	3.00	4.00	1.50	2.00	3.75	0.34	2.31	0.38	--	3.25	P,S ports = 0.41 B,M,T ports = 0.42	4	1-1/4	-20 or M42x2.0	1"	-16 or M33x2.0	1
H0000216		7.75							--	7.00		4					2
H0000316		11.50							--	10.75		4					3
H0000416		15.25							--	14.50		4					4
H0000516		19.00							11.00	18.25		6					5
H0000616		22.75							11.00	22.00		6					6
H0000716		26.50							14.75	25.75		6					7
H0000816		30.25							14.75	29.50		6					8
H0000916		34.00							18.50	33.25		6					9
H0001016		37.75							18.50	37.00		6					10
H0000120	3.50	4.50	1.75	2.25	4.00	0.41	2.69	0.50	--	3.50	0.53	4	1-1/2	-24 or M48x2.0	1-1/4	-20 or M42x2.0	1
H0000220		8.50							--	7.50		4					2
H0000320		12.50							--	11.50		4					3
H0000420		16.50							--	15.50		4					4
H0000520		20.50							11.75	19.50		6					5
H0000620		24.50							11.75	23.50		6					6
H0000720		28.50							15.75	27.50		6					7
H0000820		32.50							15.75	31.50		6					8
H0000920		36.50							19.75	35.50		6					9
H0001020		40.50							19.75	39.50		6					10
*H0000124[B,P,T]	4.00	5.00	2.00	2.50	5.00	0.41	3.19	0.50	--	4.00	0.53	4	2"	--	1-1/2	--	1
*H0000224[B,P,T]		10.00							--	9.00		4					2
*H0000324[B,P,T]		15.00							--	14.00		4					3
*H0000424[B,P,T]		20.00							9.50	19.00		6					4
*H0000524[B,P,T]		25.00							14.50	24.00		6					5
*H0000624[B,P,T]		30.00							14.50	29.00		6					6
*H0000724[B,P,T]		35.00							19.50	34.00		6					7
*H0000824[B,P,T]		40.00							19.50	39.00		6					8
*H0000924[B,P,T]		45.00							24.50	44.00		6					9
*H0001024[B,P,T]		50.00							24.50	49.00		6					10
*H0000124[M,S]	4.50	5.00	2.25	2.50	5.00	0.41	3.69	0.50	--	4.00	0.53	4	--	-32 or M60x2.0	--	-24 or M48x2.0	1
*H0000224[M,S]		10.00							--	9.00		4					2
*H0000324[M,S]		15.00							--	14.00		4					3
*H0000424[M,S]		20.00							9.50	19.00		6					4
*H0000524[M,S]		25.00							14.50	24.00		6					5
*H0000624[M,S]		30.00							14.50	29.00		6					6
*H0000724[M,S]		35.00							19.50	34.00		6					7
*H0000824[M,S]		40.00							19.50	39.00		6					8
*H0000924[M,S]		45.00							24.50	44.00		6					9
*H0001024[M,S]		50.00							24.50	49.00		6					10

Daman Products Company, Inc. • 1811 North Home Street • Mishawaka, IN 46545-7267
Tel: 800.959.7841 574.259.7841 • Fax: 800.241.7664 • Email: sales@daman.com • www.daman.com

Header Manifolds - 90° ☞

Daman Products Company, Inc. • 1811 North Home Street • Mishawaka, IN 46545-7267
Tel: 800.959.7841 574.259.7841 • Fax: 800.241.7664 • Email: sales@daman.com • www.daman.com

Header Manifolds - 90° Design

Header block mounting hardware is supplied, except for stainless.
See page 201 for itemized list.

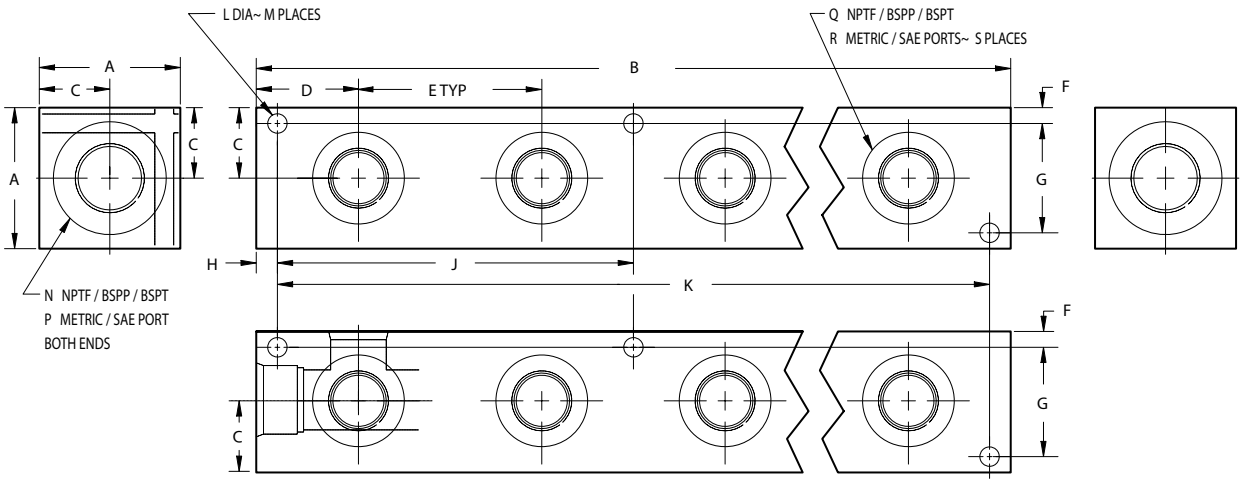

Specifications, descriptions, and dimensional data are subject to correction or change without notice or incurring obligation. Download latest catalog page revisions at www.daman.com.

Ordering Information

Material	Product Type	Side Port Layout	No. of Stations	Side Port Threads

For **coating options** see pages 245-246.

Material

A	Aluminum - 6061-T6 3000† psi • 20.7 MPa
D	Ductile Iron - D4512 5000† psi • 34.5 MPa
S*	Stainless Steel - 17-4 5000† psi • 34.5 MPa

† Working pressure should be considered in accordance with ISO 4413 to determine appropriate material type.

*All stainless steel products are passivated.

Product Type

H	Header Block

Side Port Layout

090	Ports out two adjacent sides

No. of Stations

01 thru 10	Check chart on next page to verify station-port size combinations

Side Port Threads

04B*	04P*	04T*	B = BSPP • ISO 1179, BS 2779 P = NPTF • ANSI B1.20.3 T = BSPT • ISO 7, BS 21	04M*	04S*	M = METRIC • ISO 6149 S = SAE • ISO 11926, SAE 1926
06B	06P	06T		06M*	06S*	
08B*	08P*	08T*		08M*	08S*	
12B**	12P**	12T**		12M**	12S**	
16B**	16P**	16T**		16M**	16S**	
20B**	20P**	20T**		20M**	20S**	
24B	24P	24T		24M	24S	

Check chart on next page to verify station-port size combinations

* Available in Stainless Steel
** Available in Stainless Steel, 1-5 stations
Note: Pipe ports in stainless can gall.

Daman Products Company, Inc. • 1811 North Home Street • Mishawaka, IN 46545-7267
Tel: 800.959.7841 574.259.7841 • Fax: 800.241.7664 • Email: sales@daman.com • www.daman.com

Header Manifolds - 90° Design

PART NO.	A	B	C	D	E	F	G	H	J	K	L	M	N	P	Q	R	S
H0900104	1.75	2.13	0.88	1.06	1.75	0.25	1.25	0.31	--	1.50	0.28	4	3/8	-6 or M14x1.5	1/4	-4 or M10x1.0	2
H0900204		3.88							--	3.25		4					4
H0900304		5.63							--	5.00		4					6
H0900404		7.38							--	6.75		4					8
H0900504		9.13							5.13	8.50		6					10
H0900604		10.88							5.13	10.25		6					12
H0900704		12.63							6.88	12.00		6					14
H0900804		14.38							6.88	13.75		6					16
H0900904		16.13							8.63	15.50		6					18
H0901004		17.88							8.63	17.25		6					20
*H0900106[B,P,T]	2.00	3.00	1.00	1.50	2.00	0.25	1.50	0.31	--	2.38	0.28	4	1/2	--	3/8	--	2
*H0900206[B,P,T]		5.00							--	4.38		4					4
*H0900306[B,P,T]		7.00							--	6.38		4					6
*H0900406[B,P,T]		9.00							--	8.38		4					8
*H0900506[B,P,T]		11.00							6.19	10.38		6					10
*H0900606[B,P,T]		13.00							6.19	12.38		6					12
*H0900706[B,P,T]		15.00							8.19	14.38		6					14
*H0900806[B,P,T]		17.00							8.19	16.38		6					16
*H0900906[B,P,T]		19.00							10.19	18.38		6					18
*H0901006[B,P,T]		21.00							10.19	20.38		6					20
*H0900106[M,S]	1.75	3.00	0.88	1.50	2.00	0.25	1.25	0.31	--	2.38	0.28	4	--	-8 or M18x1.5	--	-6 or M14x1.5	2
*H0900206[M,S]		5.00							--	4.38		4					4
*H0900306[M,S]		7.00							--	6.38		4					6
*H0900406[M,S]		9.00							--	8.38		4					8
*H0900506[M,S]		11.00							6.19	10.38		6					10
*H0900606[M,S]		13.00							6.19	12.38		6					12
*H0900706[M,S]		15.00							8.19	14.38		6					14
*H0900806[M,S]		17.00							8.19	16.38		6					16
*H0900906[M,S]		19.00							10.19	18.38		6					18
*H0901006[M,S]		21.00							10.19	20.38		6					20
*H0900108[B,P,T]	2.00	3.00	1.00	1.50	2.38	0.25	1.50	0.31	--	2.38	0.28	4	3/4	--	1/2	--	2
*H0900208[B,P,T]		5.38							--	4.75		4					4
*H0900308[B,P,T]		7.75							--	7.13		4					6
*H0900408[B,P,T]		10.13							--	9.50		4					8
*H0900508[B,P,T]		12.50							7.13	11.88		6					10
*H0900608[B,P,T]		14.88							7.13	14.25		6					12
*H0900708[B,P,T]		17.25							9.50	16.63		6					14
*H0900808[B,P,T]		19.63							9.50	19.00		6					16
*H0900908[B,P,T]		22.00							11.88	21.38		6					18
*H0901008[B,P,T]		24.38							11.88	23.75		6					20
*H0900108[M,S]	2.25	3.00	1.13	1.50	2.38	0.25	1.75	0.31	--	2.38	0.28	4	--	-12 or M27x2.0	--	-8 or M18x1.5	2
*H0900208[M,S]		5.38							--	4.75		4					4
*H0900308[M,S]		7.75							--	7.13		4					6
*H0900408[M,S]		10.13							--	9.50		4					8
*H0900508[M,S]		12.50							7.13	11.88		6					10
*H0900608[M,S]		14.88							7.13	14.25		6					12
*H0900708[M,S]		17.25							9.50	16.63		6					14
*H0900808[M,S]		19.63							9.50	19.00		6					16
*H0900908[M,S]		22.00							11.88	21.38		6					18
*H0901008[M,S]		24.38							11.88	23.75		6					20
H0900112	2.50	3.63	1.25	1.81	3.25	0.28	1.94	0.38	--	2.88	0.34	4	1”	-16 or M33x2.0	3/4	-12 or M27x2.0	2
H0900212		6.88							--	6.13		4					4
H0900312		10.13							--	9.38		4					6
H0900412		13.38							--	12.63		4					8
H0900512		16.63							9.56	15.88		6					10
H0900612		19.88							9.56	19.13		6					12
H0900712		23.13							12.81	22.38		6					14
H0900812		26.38							12.81	25.63		6					16
H0900912		29.63							16.06	28.88		6					18
H0901012		32.88							16.06	32.13		6					20

Chart continued on next page

Daman Products Company, Inc. • 1811 North Home Street • Mishawaka, IN 46545-7267
Tel: 800.959.7841 574.259.7841 • Fax: 800.241.7664 • Email: sales@daman.com • www.daman.com

Daman®

Header Manifolds - 90° Design (cont)

PART NO.	A	B	C	D	E	F	G	H	J	K	L	M	N	P	Q	R	S
H0900116	3.00	4.00	1.50	2.00	3.75	0.34	2.31	0.38	--	3.25	P,S ports = 0.41 B,M,T ports = 0.42	4	1-1/4	-20 or M42x2.0	1”	-16 or M33x2.0	2
H0900216		7.75							--	7.00		4					4
H0900316		11.50							--	10.75		4					6
H0900416		15.25							--	14.50		4					8
H0900516		19.00							11.00	18.25		6					10
H0900616		22.75							11.00	22.00		6					12
H0900716		26.50							14.75	25.75		6					14
H0900816		30.25							14.75	29.50		6					16
H0900916		34.00							18.50	33.25		6					18
H0901016		37.75							18.50	37.00		6					20
H0900120	3.50	4.50	1.75	2.25	4.00	0.41	2.69	0.50	--	3.50	0.53	4	1-1/2	-24 or M48x2.0	1-1/4	-20 or M42x2.0	2
H0900220		8.50							--	7.50		4					4
H0900320		12.50							--	11.50		4					6
H0900420		16.50							--	15.50		4					8
H0900520		20.50							11.75	19.50		6					10
H0900620		24.50							11.75	23.50		6					12
H0900720		28.50							15.75	27.50		6					14
H0900820		32.50							15.75	31.50		6					16
H0900920		36.50							19.75	35.50		6					18
H0901020		40.50							19.75	39.50		6					20
*H0900124[B,P,T]	4.00	5.00	2.00	2.50	5.00	0.41	3.19	0.50	--	4.00	0.53	4	2”	--	1-1/2	--	2
*H0900224[B,P,T]		10.00							--	9.00		4					4
*H0900324[B,P,T]		15.00							--	14.00		4					6
*H0900424[B,P,T]		20.00							9.50	19.00		6					8
*H0900524[B,P,T]		25.00							14.50	24.00		6					10
*H0900624[B,P,T]		30.00							14.50	29.00		6					12
*H0900724[B,P,T]		35.00							19.50	34.00		6					14
*H0900824[B,P,T]		40.00							19.50	39.00		6					16
*H0900924[B,P,T]		45.00							24.50	44.00		6					18
*H0901024[B,P,T]		50.00							24.50	49.00		6					20
*H0900124[M,S]	4.50	5.00	2.25	2.50	5.00	0.41	3.69	0.50	--	4.00	0.53	4	--	-32 or M60x2.0	---	-24 or M48x2.0	2
*H0900224[M,S]		10.00							--	9.00		4					4
*H0900324[M,S]		15.00							--	14.00		4					6
*H0900424[M,S]		20.00							9.50	19.00		6					8
*H0900524[M,S]		25.00							14.50	24.00		6					10
*H0900624[M,S]		30.00							14.50	29.00		6					12
*H0900724[M,S]		35.00							19.50	34.00		6					14
*H0900824[M,S]		40.00							19.50	39.00		6					16
*H0900924[M,S]		45.00							24.50	44.00		6					18
*H0901024[M,S]		50.00							24.50	49.00		6					20

Daman Products Company, Inc. • 1811 North Home Street • Mishawaka, IN 46545-7267
Tel: 800.959.7841 574.259.7841 • Fax: 800.241.7664 • Email: sales@daman.com • www.daman.com

Header Manifolds - 180° ☞

Daman Products Company, Inc. • 1811 North Home Street • Mishawaka, IN 46545-7267
Tel: 800.959.7841 574.259.7841 • Fax: 800.241.7664 • Email: sales@daman.com • www.daman.com

Header Manifolds - 180° Design

Header block mounting hardware is supplied, except for stainless.
See page 201 for itemized list.

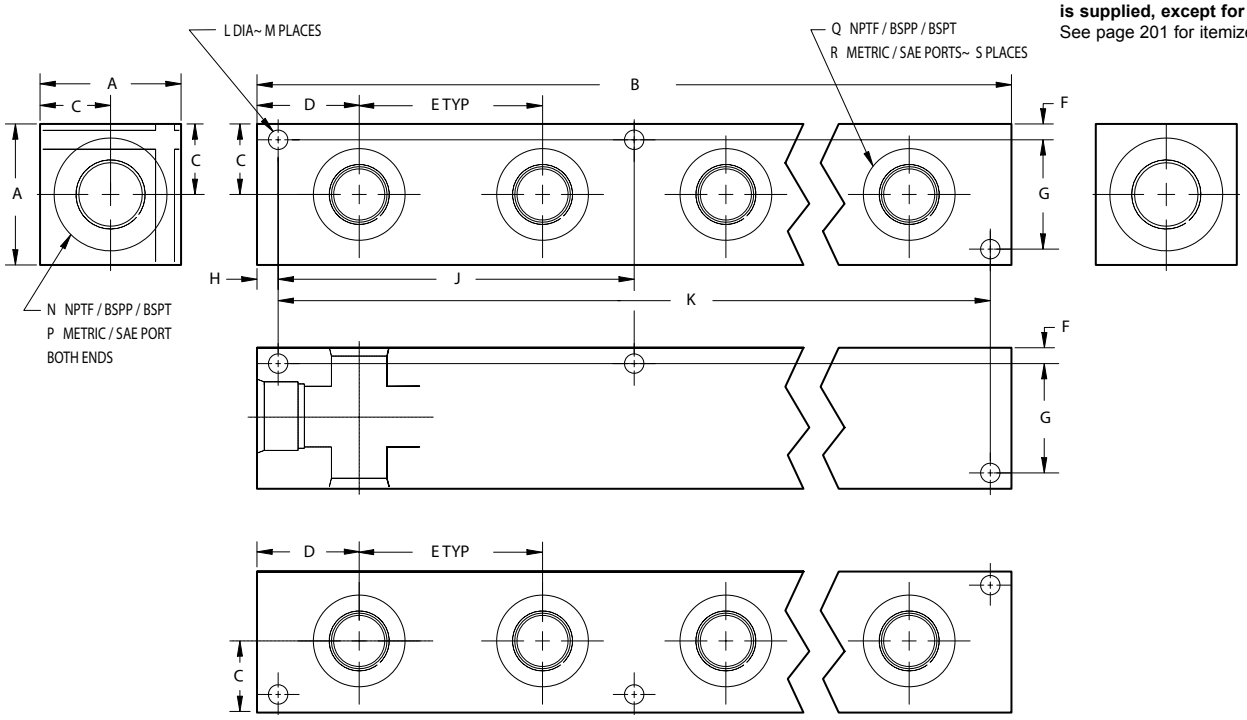

Specifications, descriptions, and dimensional data are subject to correction or change without notice or incurring obligation. Download latest catalog page revisions at www.daman.com.

Ordering Information

Material	Product Type	Side Port Layout	No. of Stations	Side Port Threads

For **coating options** see pages 245-246.

Material

A	Aluminum - 6061-T6 3000† psi • 20.7 MPa
D	Ductile Iron - D4512 5000† psi • 34.5 MPa
S*	Stainless Steel - 17-4 5000† psi • 34.5 MPa

† Working pressure should be considered in accordance with ISO 4413 to determine appropriate material type.

*All stainless steel products are passivated.

Product Type

H	Header Block

Side Port Layout

180	Ports out two opposite sides

No. of Stations

01 thru 10	Check chart on next page to verify station-port size combinations

Side Port Threads

04B*	04P*	04T*	B = BSPP • ISO 1179, BS 2779 P = NPTF • ANSI B1.20.3 T = BSPT • ISO 7, BS 21	04M*	04S*	M = METRIC • ISO 6149 S = SAE • ISO 11926, SAE 1926
06B	06P	06T		06M*	06S*	
08B*	08P*	08T*		08M*	08S*	
12B**	12P**	12T**		12M**	12S**	
16B**	16P**	16T**		16M**	16S**	
20B**	20P**	20T**		20M**	20S**	
24B	24P	24T		24M	24S	

Check chart on next page to verify station-port size combinations

* Available in Stainless Steel
** Available in Stainless Steel, 1-5 stations
Note: Pipe ports in stainless can gall.

Daman Products Company, Inc. • 1811 North Home Street • Mishawaka, IN 46545-7267
Tel: 800.959.7841 574.259.7841 • Fax: 800.241.7664 • Email: sales@daman.com • www.daman.com

Header Manifolds - 180° Design

PART NO.	A	B	C	D	E	F	G	H	J	K	L	M	N	P	Q	R	S
H1800104		2.13							--	1.50		4					2
H1800204		3.88							--	3.25		4					4
H1800304		5.63							--	5.00		4					6
H1800404		7.38							--	6.75		4					8
H1800504		9.13							5.13	8.50		6		-6		-4	10
H1800604	1.75	10.88	0.88	1.06	1.75	0.25	1.25	0.31	5.13	10.25	0.28	6	3/8	or	1/4	or	12
H1800704		12.63							6.88	12.00		6		M14x1.5		M10x1.0	14
H1800804		14.38							6.88	13.75		6					16
H1800904		16.13							8.63	15.50		6					18
H1801004		17.88							8.63	17.25		6					20
*H1800106[B,P,T]		3.00							--	2.38		4					2
*H1800206[B,P,T]		5.00							--	4.38		4					4
*H1800306[B,P,T]		7.00							--	6.38		4					6
*H1800406[B,P,T]		9.00							--	8.38		4					8
*H1800506[B,P,T]		11.00							6.19	10.38		6					10
*H1800606[B,P,T]	2.00	13.00	1.00	1.50	2.00	0.25	1.50	0.31	6.19	12.38	0.28	6	1/2	--	3/8	--	12
*H1800706[B,P,T]		15.00							8.19	14.38		6					14
*H1800806[B,P,T]		17.00							8.19	16.38		6					16
*H1800906[B,P,T]		19.00							10.19	18.38		6					18
*H1801006[B,P,T]		21.00							10.19	20.38		6					20
*H1800106[M,S]		3.00							--	2.38		4					2
*H1800206[M,S]		5.00							--	4.38		4					4
*H1800306[M,S]		7.00							--	6.38		4					6
*H1800406[M,S]		9.00							--	8.38		4					8
*H1800506[M,S]		11.00							6.19	10.38		6		-8		-6	10
*H1800606[M,S]	1.75	13.00	0.88	1.50	2.00	0.25	1.25	0.31	6.19	12.38	0.28	6	--	or	--	or	12
*H1800706[M,S]		15.00							8.19	14.38		6		M18x1.5		M14x1.5	14
*H1800806[M,S]		17.00							8.19	16.38		6					16
*H1800906[M,S]		19.00							10.19	18.38		6					18
*H1801006[M,S]		21.00							10.19	20.38		6					20
*H1800108[B,P,T]		3.00							--	2.38		4					2
*H1800208[B,P,T]		5.38							--	4.75		4					4
*H1800308[B,P,T]		7.75							--	7.13		4					6
*H1800408[B,P,T]		10.13							--	9.50		4					8
*H1800508[B,P,T]		12.50							7.13	11.88		6					10
*H1800608[B,P,T]	2.00	14.88	1.00	1.50	2.38	0.25	1.50	0.31	7.13	14.25	0.28	6	3/4	--	1/2	--	12
*H1800708[B,P,T]		17.25							9.50	16.63		6					14
*H1800808[B,P,T]		19.63							9.50	19.00		6					16
*H1800908[B,P,T]		22.00							11.88	21.38		6					18
*H1801008[B,P,T]		24.38							11.88	23.75		6					20
*H1800108[M,S]		3.00							--	2.38		4					2
*H1800208[M,S]		5.38							--	4.75		4					4
*H1800308[M,S]		7.75							--	7.13		4					6
*H1800408[M,S]		10.13							--	9.50		4					8
*H1800508[M,S]		12.50							7.13	11.88		6		-12		-8	10
*H1800608[M,S]	2.25	14.88	1.13	1.50	2.38	0.25	1.75	0.31	7.13	14.25	0.28	6	--	or	--	or	12
*H1800708[M,S]		17.25							9.50	16.63		6		M27x2.0		M18x1.5	14
*H1800808[M,S]		19.63							9.50	19.00		6					16
*H1800908[M,S]		22.00							11.88	21.38		6					18
*H1801008[M,S]		24.38							11.88	23.75		6					20
H1800112		3.63							--	2.88		4					2
H1800212		6.88							--	6.13		4					4
H1800312		10.13							--	9.38		4					6
H1800412		13.38							--	12.63		4					8
H1800512		16.63							9.56	15.88		6		-16		-12	10
H1800612	2.50	19.88	1.25	1.81	3.25	0.28	1.94	0.38	9.56	19.13	0.34	6	1”	or	3/4	or	12
H1800712		23.13							12.81	22.38		6		M33x2.0		M27x2.0	14
H1800812		26.38							12.81	25.63		6					16
H1800912		29.63							16.06	28.88		6					18
H1801012		32.88							16.06	32.13		6					20

Chart continued on next page

Daman Products Company, Inc. • 1811 North Home Street • Mishawaka, IN 46545-7267
Tel: 800.959.7841 574.259.7841 • Fax: 800.241.7664 • Email: sales@daman.com • www.daman.com

Daman®

Header Manifolds - 180° Design (cont)

PART NO.	A	B	C	D	E	F	G	H	J	K	L	M	N	P	Q	R	S
H1800116	3.00	4.00	1.50	2.00	3.75	0.34	2.31	0.38	--	3.25	P,S ports = 0.41 B,M,T ports = 0.42	4	1-1/4	-20 or M42x2.0	1”	-16 or M33x2.0	2
H1800216		7.75							--	7.00		4					4
H1800316		11.50							--	10.75		4					6
H1800416		15.25							--	14.50		4					8
H1800516		19.00							11.00	18.25		6					10
H1800616		22.75							11.00	22.00		6					12
H1800716		26.50							14.75	25.75		6					14
H1800816		30.25							14.75	29.50		6					16
H1800916		34.00							18.50	33.25		6					18
H1801016		37.75							18.50	37.00		6					20
H1800120	3.50	4.50	1.75	2.25	4.00	0.41	2.69	0.50	--	3.50	0.53	4	1-1/2	-24 or M48x2.0	1-1/4	-20 or M42x2.0	2
H1800220		8.50							--	7.50		4					4
H1800320		12.50							--	11.50		4					6
H1800420		16.50							--	15.50		4					8
H1800520		20.50							11.75	19.50		6					10
H1800620		24.50							11.75	23.50		6					12
H1800720		28.50							15.75	27.50		6					14
H1800820		32.50							15.75	31.50		6					16
H1800920		36.50							19.75	35.50		6					18
H1801020		40.50							19.75	39.50		6					20
*H1800124[B,P,T]	4.00	5.00	2.00	2.50	5.00	0.41	3.19	0.50	--	4.00	0.53	4	2”	--	1-1/2	--	2
*H1800224[B,P,T]		10.00							--	9.00		4					4
*H1800324[B,P,T]		15.00							--	14.00		4					6
*H1800424[B,P,T]		20.00							9.50	19.00		4					8
*H1800524[B,P,T]		25.00							14.50	24.00		6					10
*H1800624[B,P,T]		30.00							14.50	29.00		6					12
*H1800724[B,P,T]		35.00							19.50	34.00		6					14
*H1800824[B,P,T]		40.00							19.50	39.00		6					16
*H1800924[B,P,T]		45.00							24.50	44.00		6					18
*H1801024[B,P,T]		50.00							24.50	49.00		6					20
*H1800124[M,S]	4.50	5.00	2.25	2.50	5.00	0.41	3.69	0.50	--	4.00	0.53	4	--	-32 or M60x2.0	--	-24 or M48x2.0	2
*H1800224[M,S]		10.00							--	9.00		4					4
*H1800324[M,S]		15.00							--	14.00		4					6
*H1800424[M,S]		20.00							9.50	19.00		4					8
*H1800524[M,S]		25.00							14.50	24.00		6					10
*H1800624[M,S]		30.00							14.50	29.00		6					12
*H1800724[M,S]		35.00							19.50	34.00		6					14
*H1800824[M,S]		40.00							19.50	39.00		6					16
*H1800924[M,S]		45.00							24.50	44.00		6					18
*H1801024[M,S]		50.00							24.50	49.00		6					20

Daman Products Company, Inc. • 1811 North Home Street • Mishawaka, IN 46545-7267
Tel: 800.959.7841 574.259.7841 • Fax: 800.241.7664 • Email: sales@daman.com • www.daman.com

Junction Manifolds - 90° ☞

Daman Products Company, Inc. • 1811 North Home Street • Mishawaka, IN 46545-7267
Tel: 800.959.7841 574.259.7841 • Fax: 800.241.7664 • Email: sales@daman.com • www.daman.com

Junction Manifolds - 90° Design

Junction block mounting hardware is supplied, except for stainless.
See page 201 for itemized list.

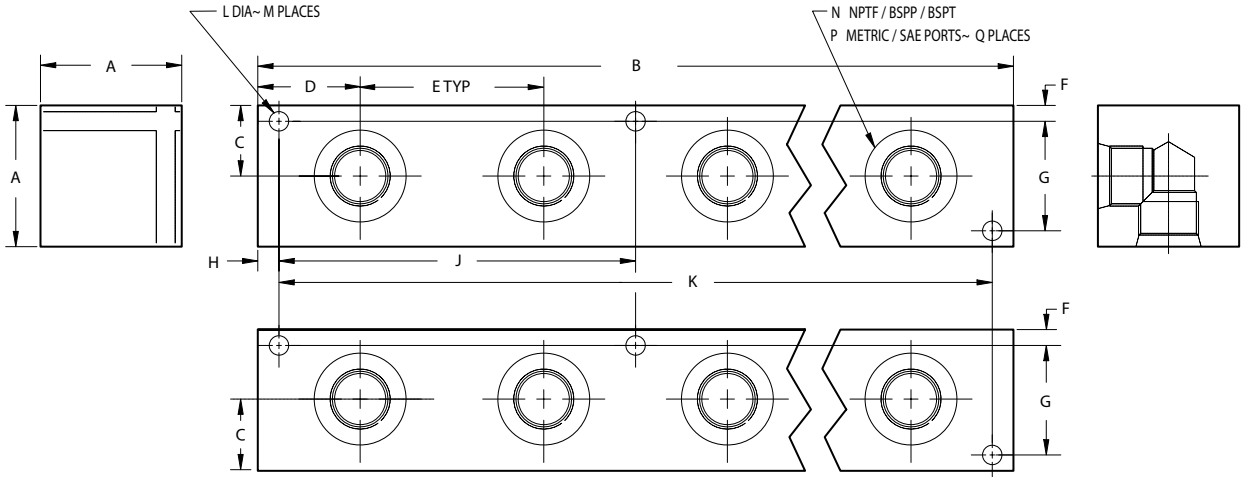

Specifications, descriptions, and dimensional data are subject to correction or change without notice or incurring obligation. Download latest catalog page revisions at www.daman.com.

Ordering Information

Material	Product Type	Side Port Layout	No. of Stations	Side Port Threads

For **coating options** see pages 245-246.

Material

A	Aluminum - 6061-T6 3000† psi • 20.7 MPa
D	Ductile Iron - D4512 5000† psi • 34.5 MPa
S*	Stainless Steel - 17-4 5000† psi • 34.5 MPa

† Working pressure should be considered in accordance with ISO 4413 to determine appropriate material type.

*All stainless steel products are passivated.

Product Type

J	Junction Block

Side Port Layout

090	Ports out two adjacent sides

No. of Stations

01 thru 10	Check chart on next page to verify station-port size combinations

Side Port Threads

04B*	04P*	04T*	B = BSPP • ISO 1179, BS 2779 P = NPTF • ANSI B1.20.3 T = BSPT • ISO 7, BS 21	04M*	04S*	M = METRIC • ISO 6149 S = SAE • ISO 11926, SAE 1926
06B*	06P*	06T*		06M*	06S*	
08B	08P	08T		08M	08S	
12B*	12P*	12T*		12M*	12S*	
16B*	16P*	16T*		16M*	16S*	
20B*	20P*	20T*		20M*	20S*	
24B	24P	24T		24M	24S	

Check chart on next page to verify station-port size combinations

* Available in Stainless Steel
Note: Pipe ports in stainless can gall.

Daman Products Company, Inc. • 1811 North Home Street • Mishawaka, IN 46545-7267
Tel: 800.959.7841 574.259.7841 • Fax: 800.241.7664 • Email: sales@daman.com • www.daman.com

Junction Manifolds - 90° Design

PART NO.	A	B	C	D	E	F	G	H	J	K	L	M	N	P	Q
J0900104		2.13							--	1.50		4			2
J0900204		3.88							--	3.25		4			4
J0900304		5.63							--	5.00		4			6
J0900404		7.38							--	6.75		4			8
J0900504	1.75	9.13	0.88	1.06	1.75	0.25	1.25	0.31	5.13	8.50	0.28	6	1/4	-4 or M10x1.0	10
J0900604		10.88							5.13	10.25		6			12
J0900704		12.63							6.88	12.00		6			14
J0900804		14.38							6.88	13.75		6			16
J0900904		16.13							8.63	15.50		6			18
J0901004		17.88							8.63	17.25		6			20
J0900106		3.00							--	2.38		4			2
J0900206		5.00							--	4.38		4			4
J0900306		7.00							--	6.38		4			6
J0900406		9.00							--	8.38		4			8
J0900506	1.75	11.00	0.88	1.50	2.00	0.25	1.25	0.31	6.19	10.38	0.28	6	3/8	-6 or M14x1.5	10
J0900606		13.00							6.19	12.38		6			12
J0900706		15.00							8.19	14.38		6			14
J0900806		17.00							8.19	16.38		6			16
J0900906		19.00							10.19	18.38		6			18
J0901006		21.00							10.19	20.38		6			20
J0900108		3.00							--	2.38		4			2
J0900208		5.38							--	4.75		4			4
J0900308		7.75							--	7.13		4			6
J0900408		10.13							--	9.50		4			8
J0900508	2.00	12.50	1.00	1.50	2.38	0.25	1.50	0.31	7.13	11.88	0.28	6	1/2	-8 or M18x1.5	10
J0900608		14.88							7.13	14.25		6			12
J0900708		17.25							9.50	16.63		6			14
J0900808		19.63							9.50	19.00		6			16
J0900908		22.00							11.88	21.38		6			18
J0901008		24.38							11.88	23.75		6			20
J0900112		3.63							--	2.88		4			2
J0900212		6.88							--	6.13		4			4
J0900312		10.13							--	9.38		4			6
J0900412		13.38							--	12.63		4			8
J0900512	2.50	16.63	1.25	1.81	3.25	0.28	1.94	0.38	9.56	15.88	0.34	6	3/4	-12 or M27x2.0	10
J0900612		19.88							9.56	19.13		6			12
J0900712		23.13							12.81	22.38		6			14
J0900812		26.38							12.81	25.63		6			16
J0900912		29.63							16.06	28.88		6			18
J0901012		32.88							16.06	32.13		6			20
J0900116		4.00							--	3.25		4			2
J0900216		7.75							--	7.00		4			4
J0900316		11.50							--	10.75		4			6
J0900416		15.25							--	14.50		4			8
J0900516	3.00	19.00	1.50	2.00	3.75	0.34	2.31	0.38	11.00	18.25	P,S ports = 0.41 B,M,T ports = 0.42	6	1"	-16 or M33x2.0	10
J0900616		22.75							11.00	22.00		6			12
J0900716		26.50							14.75	25.75		6			14
J0900816		30.25							14.75	29.50		6			16
J0900916		34.00							18.50	33.25		6			18
J0901016		37.75							18.50	37.00		6			20
J0900120		4.50							--	3.50		4			2
J0900220		8.50							--	7.50		4			4
J0900320		12.50							--	11.50		4			6
J0900420		16.50							--	15.50		4			8
J0900520	3.50	20.50	1.75	2.25	4.00	0.41	2.69	0.50	11.75	19.50	0.53	6	1-1/4	-20 or M42x2.0	10
J0900620		24.50							11.75	23.50		6			12
J0900720		28.50							15.75	27.50		6			14
J0900820		32.50							15.75	31.50		6			16
J0900920		36.50							19.75	35.50		6			18
J0901020		40.50							19.75	39.50		6			20

Chart continued on next page

Daman Products Company, Inc. • 1811 North Home Street • Mishawaka, IN 46545-7267
Tel: 800.959.7841 574.259.7841 • Fax: 800.241.7664 • Email: sales@daman.com • www.daman.com

Daman®

Junction Manifolds - 90° Design (cont)

PART NO.	A	B	C	D	E	F	G	H	J	K	L	M	N	P	Q
J0900124		5.00							--	4.00		4			2
J0900224		10.00							--	9.00		4			4
J0900324		15.00							--	14.00		4			6
J0900424		20.00							9.50	19.00		4			8
J0900524	4.00	25.00	2.00	2.50	5.00	0.41	3.19	0.50	14.50	24.00	0.53	6	1-1/2	-24 or M48x2.0	10
J0900624		30.00							14.50	29.00		6			12
J0900724		35.00							19.50	34.00		6			14
J0900824		40.00							19.50	39.00		6			16
J0900924		45.00							24.50	44.00		6			18
J0901024		50.00							24.50	49.00		6			20

Daman Products Company, Inc. • 1811 North Home Street • Mishawaka, IN 46545-7267
Tel: 800.959.7841 574.259.7841 • Fax: 800.241.7664 • Email: sales@daman.com • www.daman.com

Junction Manifolds - 180° ☞

Daman Products Company, Inc. • 1811 North Home Street • Mishawaka, IN 46545-7267
Tel: 800.959.7841 574.259.7841 • Fax: 800.241.7664 • Email: sales@daman.com • www.daman.com

Junction Manifolds - 180° Design

Junction block mounting hardware is supplied, except for stainless.
See page 201 for itemized list.

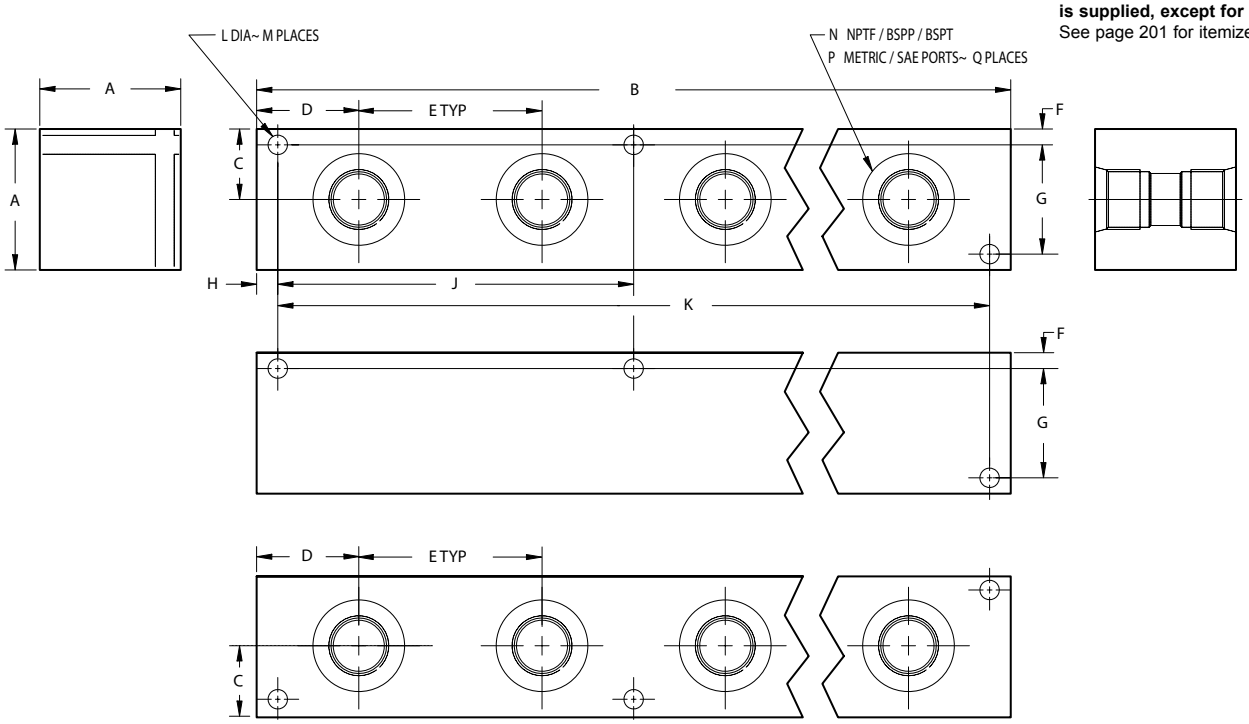

Specifications, descriptions, and dimensional data are subject to correction or change without notice or incurring obligation. Download latest catalog page revisions at www.daman.com.

Ordering Information

Material	Product Type	Side Port Layout	No. of Stations	Side Port Threads

For **coating options** see pages 245-246.

Material

A	Aluminum - 6061-T6 3000† psi • 20.7 MPa
D	Ductile Iron - D4512 5000† psi • 34.5 MPa
S*	Stainless Steel - 17-4 5000† psi • 34.5 MPa

† Working pressure should be considered in accordance with ISO 4413 to determine appropriate material type.

*All stainless steel products are passivated.

Product Type

J	Junction Block

Side Port Layout

180	Ports out two opposite sides

No. of Stations

01 thru 10	Check chart on next page to verify station-port size combinations

Side Port Threads

04B*	04P*	04T*	B = BSPP • ISO 1179, BS 2779 P = NPTF • ANSI B1.20.3 T = BSPT • ISO 7, BS 21	04M*	04S*	M = METRIC • ISO 6149 S = SAE • ISO 11926, SAE 1926
06B*	06P*	06T*		06M*	06S*	
08B	08P	08T		08M	08S	
12B*	12P*	12T*		12M*	12S*	
16B*	16P*	16T*		16M*	16S*	
20B*	20P*	20T*		20M*	20S*	
24B	24P	24T		24M	24S	

Check chart on next page to verify station-port size combinations

* Available in Stainless Steel
Note: Pipe ports in stainless can gall.

Daman Products Company, Inc. • 1811 North Home Street • Mishawaka, IN 46545-7267
Tel: 800.959.7841 574.259.7841 • Fax: 800.241.7664 • Email: sales@daman.com • www.daman.com

Junction Manifolds - 180° Design

PART NO.	A	B	C	D	E	F	G	H	J	K	L	M	N	P	Q
J1800104	1.75	2.13	0.88	1.06	1.75	0.25	1.25	0.31	--	1.50	0.28	4	1/4	-4 or M10x1.0	2
J1800204		3.88							--	3.25		4			4
J1800304		5.63							--	5.00		4			6
J1800404		7.38							--	6.75		4			8
J1800504		9.13							5.13	8.50		6			10
J1800604		10.88							5.13	10.25		6			12
J1800704		12.63							6.88	12.00		6			14
J1800804		14.38							6.88	13.75		6			16
J1800904		16.13							8.63	15.50		6			18
J1801004		17.88							8.63	17.25		6			20
J1800106	1.75	3.00	0.88	1.50	2.00	0.25	1.25	0.31	--	2.38	0.28	4	3/8	-6 or M14x1.5	2
J1800206		5.00							--	4.38		4			4
J1800306		7.00							--	6.38		4			6
J1800406		9.00							--	8.38		4			8
J1800506		11.00							6.19	10.38		6			10
J1800606		13.00							6.19	12.38		6			12
J1800706		15.00							8.19	14.38		6			14
J1800806		17.00							8.19	16.38		6			16
J1800906		19.00							10.19	18.38		6			18
J1801006		21.00							10.19	20.38		6			20
J1800108	2.00	3.00	1.00	1.50	2.38	0.25	1.50	0.31	--	2.38	0.28	4	1/2	-8 or M18x1.5	2
J1800208		5.38							--	4.75		4			4
J1800308		7.75							--	7.13		4			6
J1800408		10.13							--	9.50		4			8
J1800508		12.50							7.13	11.88		6			10
J1800608		14.88							7.13	14.25		6			12
J1800708		17.25							9.50	16.63		6			14
J1800808		19.63							9.50	19.00		6			16
J1800908		22.00							11.88	21.38		6			18
J1801008		24.38							11.88	23.75		6			20
J1800112	2.50	3.63	1.25	1.81	3.25	0.28	1.94	0.38	--	2.88	0.34	4	3/4	-12 or M27x2.0	2
J1800212		6.88							--	6.13		4			4
J1800312		10.13							--	9.38		4			6
J1800412		13.38							--	12.63		4			8
J1800512		16.63							9.56	15.88		6			10
J1800612		19.88							9.56	19.13		6			12
J1800712		23.13							12.81	22.38		6			14
J1800812		26.38							12.81	25.63		6			16
J1800912		29.63							16.06	28.88		6			18
J1801012		32.88							16.06	32.13		6			20
J1800116	3.00	4.00	1.50	2.00	3.75	0.34	2.31	0.38	--	3.25	P,S ports = 0.41 B,M,T ports = 0.42	4	1”	-16 or M33x2.0	2
J1800216		7.75							--	7.00		4			4
J1800316		11.50							--	10.75		4			6
J1800416		15.25							--	14.50		4			8
J1800516		19.00							11.00	18.25		6			10
J1800616		22.75							11.00	22.00		6			12
J1800716		26.50							14.75	25.75		6			14
J1800816		30.25							14.75	29.50		6			16
J1800916		34.00							18.50	33.25		6			18
J1801016		37.75							18.50	37.00		6			20
J1800120	3.50	4.50	1.75	2.25	4.00	0.41	2.69	0.50	--	3.50	0.53	4	1-1/4	-20 or M42x2.0	2
J1800220		8.50							--	7.50		4			4
J1800320		12.50							--	11.50		4			6
J1800420		16.50							--	15.50		4			8
J1800520		20.50							11.75	19.50		6			10
J1800620		24.50							11.75	23.50		6			12
J1800720		28.50							15.75	27.50		6			14
J1800820		32.50							15.75	31.50		6			16
J1800920		36.50							19.75	35.50		6			18
J1801020		40.50							19.75	39.50		6			20

Chart continued on next page

Daman Products Company, Inc. • 1811 North Home Street • Mishawaka, IN 46545-7267
Tel: 800.959.7841 574.259.7841 • Fax: 800.241.7664 • Email: sales@daman.com • www.daman.com

Junction Manifolds - 180° Design (cont)

PART NO.	A	B	C	D	E	F	G	H	J	K	L	M	N	P	Q
J1800124		5.00							--	4.00		4			2
J1800224		10.00							--	9.00		4			4
J1800324		15.00							--	14.00		4			6
J1800424		20.00							9.50	19.00		4		-24	8
J1800524	4.00	25.00	2.00	2.50	5.00	0.41	3.19	0.50	14.50	24.00	0.53	6	1-1/2	or	10
J1800624		30.00							14.50	29.00		6		M48x2.0	12
J1800724		35.00							19.50	34.00		6			14
J1800824		40.00							19.50	39.00		6			16
J1800924		45.00							24.50	44.00		6			18
J1801024		50.00							24.50	49.00		6			20

Daman Products Company, Inc. • 1811 North Home Street • Mishawaka, IN 46545-7267
Tel: 800.959.7841 574.259.7841 • Fax: 800.241.7664 • Email: sales@daman.com • www.daman.com

Junction Manifolds - 270° ☞

Daman Products Company, Inc. • 1811 North Home Street • Mishawaka, IN 46545-7267
Tel: 800.959.7841 574.259.7841 • Fax: 800.241.7664 • Email: sales@daman.com • www.daman.com

Junction Manifolds - 270° Design

Junction block mounting hardware is supplied, except for stainless.
See page 201 for itemized list.

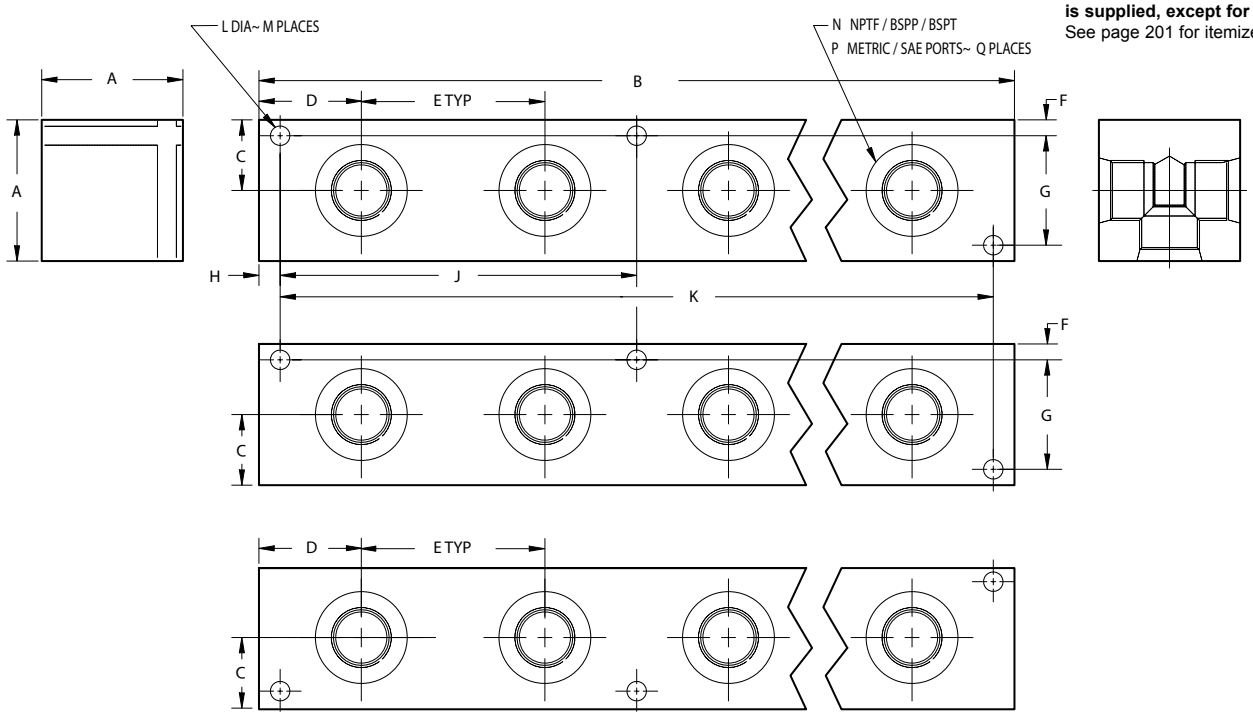

Specifications, descriptions, and dimensional data are subject to correction or change without notice or incurring obligation. Download latest catalog page revisions at www.daman.com.

Ordering Information

Material	Product Type	Side Port Layout	No. of Stations	Side Port Threads

For **coating options** see pages 245-246.

Material

A	Aluminum - 6061-T6 3000† psi • 20.7 MPa
D	Ductile Iron - D4512 5000† psi • 34.5 MPa
S*	Stainless Steel - 17-4 5000† psi • 34.5 MPa

† Working pressure should be considered in accordance with ISO 4413 to determine appropriate material type.

*All stainless steel products are passivated.

Product Type

J	Junction Block

Side Port Layout

270	Ports out three adjacent sides

No. of Stations

01 thru 10	Check chart on next page to verify station-port size combinations

Side Port Threads

04B*	04P*	04T*	B = BSPP • ISO 1179, BS 2779 P = NPTF • ANSI B1.20.3 T = BSPT • ISO 7, BS 21	04M*	04S*	M = METRIC • ISO 6149 S = SAE • ISO 11926, SAE 1926
06B*	06P*	06T*		06M*	06S*	
08B	08P	08T		08M	08S	
12B*	12P*	12T*		12M*	12S*	
16B*	16P*	16T*		16M*	16S*	
20B*	20P*	20T*		20M*	20S*	
24B	24P	24T		24M	24S	

Check chart on next page to verify station-port size combinations

* Available in Stainless Steel
Note: Pipe ports in stainless can gall.

Daman Products Company, Inc. • 1811 North Home Street • Mishawaka, IN 46545-7267
Tel: 800.959.7841 574.259.7841 • Fax: 800.241.7664 • Email: sales@daman.com • www.daman.com

Junction Manifolds - 270° Design

PART NO.	A	B	C	D	E	F	G	H	J	K	L	M	N	P	Q
J2700104	1.75	2.13	0.88	1.06	1.75	0.25	1.25	0.31	--	1.50	0.28	4	1/4	-4 or M10x1.0	3
J2700204		3.88							--	3.25		4			6
J2700304		5.63							--	5.00		4			9
J2700404		7.38							--	6.75		4			12
J2700504		9.13							5.13	8.50		6			15
J2700604		10.88							5.13	10.25		6			18
J2700704		12.63							6.88	12.00		6			21
J2700804		14.38							6.88	13.75		6			24
J2700904		16.13							8.63	15.50		6			27
J2701004		17.88							8.63	17.25		6			30
J2700106	1.75	3.00	0.88	1.50	2.00	0.25	1.25	0.31	--	2.38	0.28	4	3/8	-6 or M14x1.5	3
J2700206		5.00							--	4.38		4			6
J2700306		7.00							--	6.38		4			9
J2700406		9.00							--	8.38		4			12
J2700506		11.00							6.19	10.38		6			15
J2700606		13.00							6.19	12.38		6			18
J2700706		15.00							8.19	14.38		6			21
J2700806		17.00							8.19	16.38		6			24
J2700906		19.00							10.19	18.38		6			27
J2701006		21.00							10.19	20.38		6			30
J2700108	2.00	3.00	1.00	1.50	2.38	0.25	1.50	0.31	--	2.38	0.28	4	1/2	-8 or M18x1.5	3
J2700208		5.38							--	4.75		4			6
J2700308		7.75							--	7.13		4			9
J2700408		10.13							--	9.50		4			12
J2700508		12.50							7.13	11.88		6			15
J2700608		14.88							7.13	14.25		6			18
J2700708		17.25							9.50	16.63		6			21
J2700808		19.63							9.50	19.00		6			24
J2700908		22.00							11.88	21.38		6			27
J2701008		24.38							11.88	23.75		6			30
J2700112	2.50	3.63	1.25	1.81	3.25	0.28	1.94	0.38	--	2.88	0.34	4	3/4	-12 or M27x2.0	3
J2700212		6.88							--	6.13		4			6
J2700312		10.13							--	9.38		4			9
J2700412		13.38							--	12.63		4			12
J2700512		16.63							9.56	15.88		6			15
J2700612		19.88							9.56	19.13		6			18
J2700712		23.13							12.81	22.38		6			21
J2700812		26.38							12.81	25.63		6			24
J2700912		29.63							16.06	28.88		6			27
J2701012		32.88							16.06	32.13		6			30
J2700116	3.00	4.00	1.50	2.00	3.75	0.34	2.31	0.38	--	3.25	P,S ports = 0.41 B,M,T ports = 0.42	4	1"	-16 or M33x2.0	3
J2700216		7.75							--	7.00		4			6
J2700316		11.50							--	10.75		4			9
J2700416		15.25							--	14.50		4			12
J2700516		19.00							11.00	18.25		6			15
J2700616		22.75							11.00	22.00		6			18
J2700716		26.50							14.75	25.75		6			21
J2700816		30.25							14.75	29.50		6			24
J2700916		34.00							18.50	33.25		6			27
J2701016		37.75							18.50	37.00		6			30
J2700120	3.50	4.50	1.75	2.25	4.00	0.41	2.69	0.50	--	3.50	0.53	4	1-1/4	-20 or M42x2.0	3
J2700220		8.50							--	7.50		4			6
J2700320		12.50							--	11.50		4			9
J2700420		16.50							--	15.50		4			12
J2700520		20.50							11.75	19.50		6			15
J2700620		24.50							11.75	23.50		6			18
J2700720		28.50							15.75	27.50		6			21
J2700820		32.50							15.75	31.50		6			24
J2700920		36.50							19.75	35.50		6			27
J2701020		40.50							19.75	39.50		6			30

Chart continued on next page

Daman Products Company, Inc. • 1811 North Home Street • Mishawaka, IN 46545-7267
Tel: 800.959.7841 574.259.7841 • Fax: 800.241.7664 • Email: sales@daman.com • www.daman.com

Junction Manifolds - 270° Design (cont)

PART NO.	A	B	C	D	E	F	G	H	J	K	L	M	N	P	Q
J2700124		5.00							--	4.00		4			3
J2700224		10.00							--	9.00		4			6
J2700324		15.00							--	14.00		4			9
J2700424		20.00							9.50	19.00		6			12
J2700524	4.00	25.00	2.00	2.50	5.00	0.41	3.19	0.50	14.50	24.00	0.53	6	1-1/2	-24 or M48x2.0	15
J2700624		30.00							14.50	29.00		6			18
J2700724		35.00							19.50	34.00		6			21
J2700824		40.00							19.50	39.00		6			24
J2700924		45.00							24.50	44.00		6			27
J2701024		50.00							24.50	49.00		6			30

Daman Products Company, Inc. • 1811 North Home Street • Mishawaka, IN 46545-7267
Tel: 800.959.7841 574.259.7841 • Fax: 800.241.7664 • Email: sales@daman.com • www.daman.com

TECHNICAL INFORMATION

Dimensional Reference

Relief Valve Ordering Information Page 227

Directional Valve Patterns Pages 228-229

Flow Control Valve Patterns Pages 230-231

Pressure Control Valve Patterns Pages 230-231

Servo Valve Patterns Pages 232-239

"Obsolete Valve" Patterns Pages 240-242

Additional Reference

Materials Page 243

Tips for Material Selection Page 244

Surface Treatments Page 245

Available Coatings Page 246

Relief Valves

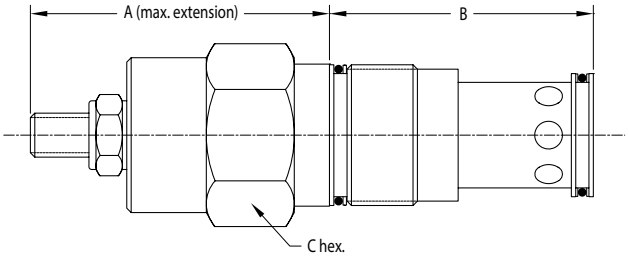

Valve	A max.	B	C hex
RPCC	2.11 [53.6]	1.22 [31.0]	0.75 [19.1]
RPEC	2.00 [50.8]	1.56 [39.7]	0.88 [22.2]
RPGC	2.12 [54.0]	1.88 [47.6]	1.12 [28.6]
RPIC	2.44 [61.9]	2.44 [61.9]	1.25 [31.8]

Sun Valve Application Chart

Manifolds		Subplates	
*D02P****/S	RPCC-L*V	*D03SPRVS***	RPEC-L*V
*D02S****/S	RPCC-L*V	*D03SPCRS***	RPEC-L*V
*D03P****/S	RPEC-L*V	*D05SPRVS8*	RPEC-L*V
*D03HP****/S	RPGC-L*V	*D05SPCRS8*	RPEC-L*V
*D03S****/S	RPEC-L*V		
		D05HSPRVS12	RPGC-L*V
*D05P****/S	RPGC-L*V	*D05HSPCRS12*	RPGC-L*V
*D05HP****/S	RPGC-L*V		
*D05JP****/S	RPIC-L*V	*D05JSPRVS16*	RPIC-L*V
*D05S02**/S	RPGC-L*V	*D05JSPCRS16*	RPIC-L*V
*D07P****/S	RPGC-L*V	*D07SPRVS12*	RPGC-L*V
*D07HP****/S	RPIC-L*V	*D07HSPRV16*	RPIC-L*V
*D08P****/S	RPGC-L*V	*D08SPRVS16*	RPGC-L*V
*D08HP****/S	RPIC-L*V	*D08SPRVS20*	RPIC-L*V

Note: Any technical or performance questions should be addressed to Sun or one of their authorized distributors.

Ordering Information

Inventory Number	—	Model	Range

999

Sun Model Code

RPCC	Cavity T-162A 0 to 12 GPM
RPEC	Cavity T-10A 0 to 25 GPM
RPGC	Cavity T-3A 0 to 50 GPM
RPIC	Cavity T-16A 0 to 100 GPM

Adjustment Range

LAV	100 to 3000 psi 1000 std. setting
LBV	50 to 1500 psi 1000 std. setting
LCV	150 to 6000 psi 1000 std. setting

Daman Products Company, Inc. • 1811 North Home Street • Mishawaka, IN 46545-7267
Tel: 800.959.7841 574.259.7841 • Fax: 800.241.7664 • Email: sales@daman.com • www.daman.com

Directional Valve Patterns

These drawings are for reference only. Please consult the appropriate standard when dimensions are critical. Dimensions may vary on our products. It should not be assumed that each hole shown is found on a given product.

D02 ISO 4401-02-01-0-05
NFPA T3.5.1 R2-2002 D02

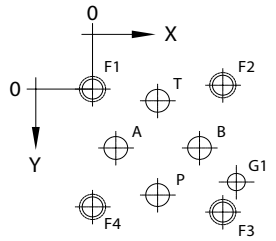

D03 ISO 4401-03-02-0-05
NFPA T3.5.1 R2-2002 D03

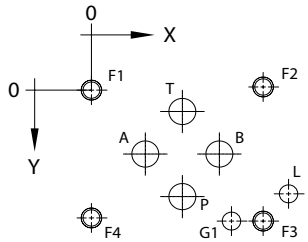

D05 ISO 4401-05-04-0-05
NFPA T3.5.1 R2-2002 D05

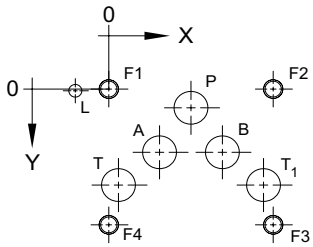

D05H NFPA T3.5.1 R2-2002
D05 - Alternative B

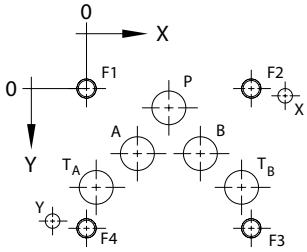

D05HE ISO 4401-05-05-0-05
NFPA T3.5.1 R2-2002 D05 - Alternative A

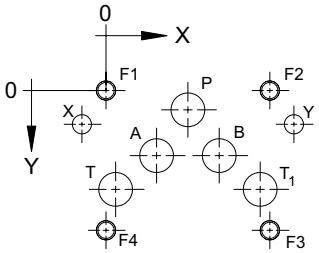

D06 NFPA T3.5.1 R2-2002 D06

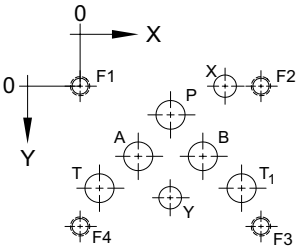

D07 ISO 4401-07-07-0-05
NFPA T3.5.1 R2-2002 D07

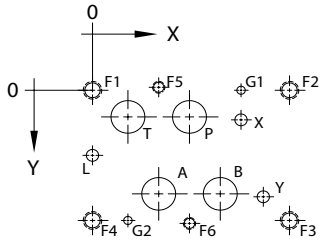

D08 ISO 4401-08-08-0-05
NFPA T3.5.1 R2-2002 D08

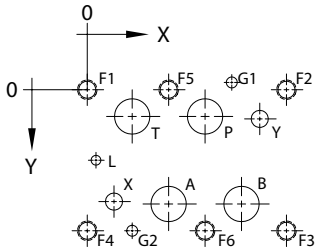

D10 ISO 4401-10-09-0-05
NFPA T3.5.1 R2-2002 D10

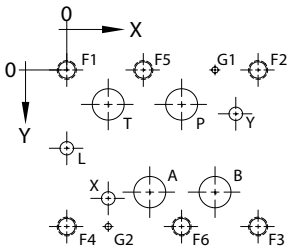

Daman Products Company, Inc. • 1811 North Home Street • Mishawaka, IN 46545-7267
Tel: 800.959.7841 574.259.7841 • Fax: 800.241.7664 • Email: sales@daman.com • www.daman.com

Pattern	Axis	P	A	T	T_1	B	X	Y	L	F1	F2	F3	F4	F5	F6	G1	G2
D02	X	0.472 [12.0]	0.169 [4.3]	0.472 [12.0]	--	0.776 [19.7]	--	--	--	0 [0]	0.945 [24.0]	0.945 [24.0]	0 [0]	--	--	1.043 [26.5]	--
	Y	0.797 [20.25]	0.443 [11.25]	0.089 [2.25]	--	0.443 [11.25]	--	--	--	0 [0]	-0.030 [-0.75]	0.915 [23.25]	0.886 [22.5]	--	--	0.699 [17.75]	--
	ϕ (max)	0.177 [4.5]	0.177 [4.5]	0.177 [4.5]	--	0.177 [4.5]	--	--	--	#10-24 M5	#10-24 M5	#10-24 M5	#10-24 M5	--	--	0.134 [3.4]	--
D03	X	0.847 [21.5]	0.500 [12.7]	0.847 [21.5]	--	1.189 [30.2]	--	--	1.831 [46.5]	0 [0]	1.595 [40.5]	1.595 [40.5]	0 [0]	--	--	1.299 [33.0]	--
	Y	1.020 [25.9]	0.610 [15.5]	0.201 [5.1]	--	0.610 [15.5]	--	--	0.988 [25.1]	0 [0]	-0.030 [-0.75]	1.250 [31.75]	1.221 [31.0]	--	--	1.250 [31.75]	--
	ϕ (max)	0.295 [7.5]	0.295 [7.5]	0.295 [7.5]	--	0.295 [7.5]	--	--	0.158 [4.0]	#10-24 M5	#10-24 M5	#10-24 M5	#10-24 M5	--	--	0.158 [4.0]	--
D05	X	1.063 [27.0]	0.658 [16.7]	0.126 [3.2]	2.000 [50.8]	1.469 [37.3]	--	--	-0.433 [-11.0]	0 [0]	2.126 [54.0]	2.126 [54.0]	0 [0]	--	--	--	--
	Y	0.248 [6.3]	0.843 [21.4]	1.280 [32.5]	1.280 [32.5]	0.843 [21.4]	--	--	0.020 [0.5]	0 [0]	0 [0]	1.811 [46.0]	1.811 [46.0]	--	--	--	--
	ϕ (max)	0.441 [11.2]	0.441 [11.2]	0.441 [11.2]	0.441 [11.2]	0.441 [11.2]	--	--	0.177 [4.5]	.25-20 M6	.25-20 M6	.25-20 M6	.25-20 M6	--	--	--	--
D05H	X	1.063 [27.0]	0.658 [16.7]	0.126 [3.2]	2.000 [50.8]	1.469 [37.3]	2.563 [65.1]	-0.441 [-11.2]	--	0 [0]	2.126 [54.0]	2.126 [54.0]	0 [0]	--	--	--	--
	Y	0.248 [6.3]	0.843 [21.4]	1.280 [32.5]	1.280 [32.5]	0.843 [21.4]	0.095 [2.4]	1.721 [43.7]	--	0 [0]	0 [0]	1.811 [46.0]	1.811 [46.0]	--	--	--	--
	ϕ (max)	0.441 [11.2]	0.441 [11.2]	0.441 [11.2]	0.441 [11.2]	0.441 [11.2]	0.189 [4.8]	0.189 [4.8]	--	.25-20 M6	.25-20 M6	.25-20 M6	.25-20 M6	--	--	--	--
D05HE	X	1.063 [27.0]	0.658 [16.7]	0.126 [3.2]	2.000 [50.8]	1.469 [37.3]	-0.315 [-8.0]	2.441 [62.0]	--	0 [0]	2.126 [54.0]	2.126 [54.0]	0 [0]	--	--	--	--
	Y	0.248 [6.3]	0.843 [21.4]	1.280 [32.5]	1.280 [32.5]	0.843 [21.4]	0.433 [11.0]	0.433 [11.0]	--	0 [0]	0 [0]	1.811 [46.0]	1.811 [46.0]	--	--	--	--
	ϕ (max)	0.441 [11.2]	0.441 [11.2]	0.441 [11.2]	0.441 [11.2]	0.441 [11.2]	0.248 [6.3]	0.248 [6.3]	--	.25-20 M6	.25-20 M6	.25-20 M6	.25-20 M6	--	--	--	--
D06	X	1.750 [44.45]	1.120 [28.45]	0.380 [9.65]	3.120 [79.25]	2.380 [60.45]	2.811 [71.4]	1.750 [44.45]	--	0 [0]	3.500 [88.9]	3.500 [88.9]	0 [0]	--	--	--	--
	Y	0.561 [14.25]	1.380 [35.05]	2.000 [50.8]	2.000 [50.8]	1.380 [35.05]	0 [0]	2.180 [55.37]	--	0 [0]	0 [0]	2.750 [69.85]	2.750 [69.85]	--	--	--	--
	ϕ (max)	0.579 [14.7]	0.579 [14.7]	0.579 [14.7]	0.579 [14.7]	0.579 [14.7]	0.441 [11.2]	0.441 [11.2]	--	.38-16 M10	.38-16 M10	.38-16 M10	.38-16 M10	--	--	--	--
D07	X	1.969 [50.0]	1.343 [34.1]	0.721 [18.3]	--	2.595 [65.9]	3.016 [76.6]	3.469 [88.1]	0 [0]	0 [0]	4.000 [101.6]	4.000 [101.6]	0 [0]	1.343 [34.1]	1.969 [50.0]	3.016 [76.6]	0.721 [18.3]
	Y	0.563 [14.3]	2.189 [55.6]	0.563 [14.3]	--	2.189 [55.6]	0.626 [15.9]	2.252 [57.2]	1.374 [34.9]	0 [0]	0 [0]	2.752 [69.9]	2.752 [69.9]	-0.063 [-1.6]	2.815 [71.5]	0 [0]	2.752 [69.9]
	ϕ (max)	0.689 [17.5]	0.689 [17.5]	0.689 [17.5]	--	0.689 [17.5]	0.248 [6.3]	0.248 [6.3]	0.248 [6.3]	.38-16 M10	.38-16 M10	.38-16 M10	.38-16 M10	.25-20 M6	.25-20 M6	0.158 [4.0]	0.158 [4.0]
D08	X	3.032 [77.0]	2.095 [53.2]	1.158 [29.4]	--	3.969 [100.8]	0.689 [17.5]	4.437 [112.7]	0.221 [5.6]	0 [0]	5.126 [130.2]	5.126 [130.2]	0 [0]	2.095 [53.2]	3.032 [77.0]	3.721 [94.5]	1.158 [29.4]
	Y	0.689 [17.5]	2.937 [74.6]	0.689 [17.5]	--	2.937 [74.6]	2.874 [73.0]	0.748 [19.0]	1.811 [46.0]	0 [0]	0 [0]	3.626 [92.1]	3.626 [92.1]	0 [0]	3.626 [92.1]	-0.189 [-4.8]	3.626 [92.1]
	ϕ (max)	0.984 [25.0]	0.984 [25.0]	0.984 [25.0]	--	0.984 [25.0]	0.441 [11.2]	0.441 [11.2]	0.441 [11.2]	.50-13 M12	.50-13 M12	.50-13 M12	.50-13 M12	.50-13 M12	.50-13 M12	0.295 [7.5]	0.295 [7.5]
D10	X	4.500 [114.3]	3.248 [82.5]	1.626 [41.3]	--	5.811 [147.6]	1.626 [41.3]	6.626 [168.3]	0 [0]	0 [0]	7.500 [190.5]	7.500 [190.5]	0 [0]	3.000 [76.2]	4.500 [114.3]	5.457 [138.6]	1.626 [41.3]
	Y	1.378 [35.0]	4.874 [123.8]	1.378 [35.0]	--	4.874 [123.8]	5.126 [130.2]	1.752 [44.5]	3.126 [79.4]	0 [0]	0 [0]	6.252 [158.8]	6.252 [158.8]	0 [0]	6.252 [158.8]	0 [0]	6.252 [158.8]
	ϕ (max)	1.260 [32.0]	1.260 [32.0]	1.260 [32.0]	--	1.260 [32.0]	0.441 [11.2]	0.441 [11.2]	0.441 [11.2]	.75-10 M20	.75-10 M20	.75-10 M20	.75-10 M20	.75-10 M20	.75-10 M20	0.295 [7.5]	0.295 [7.5]

Daman Products Company, Inc. • 1811 North Home Street • Mishawaka, IN 46545-7267
Tel: 800.959.7841 574.259.7841 • Fax: 800.241.7664 • Email: sales@daman.com • www.daman.com

Non-Directional Valve Patterns

These drawings are for reference only. Please consult the appropriate standard when dimensions are critical. Dimensions may vary on our products. It should not be assumed that each hole shown is found on a given product.

2F06 ISO 6263-06-05-*-97
NFPA T3.5.1 R2-2002 2F06

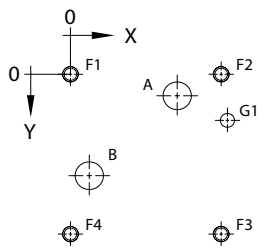

2F07 ISO 6263-07-09-*-97
NFPA T3.5.1 R2-2002 2F07

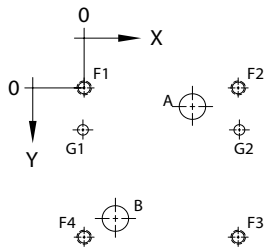

P06 ISO 6264-06-07-*-97
ISO 5781-06-07-0-00
NFPA T3.5.1 R2-2002 P06

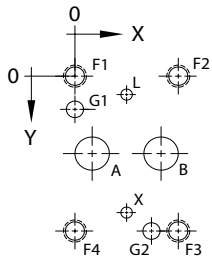

P08 ISO 6264-08-11-*-97
ISO 5781-08-10-0-00
NFPA T3.5.1 R2-2002 P08

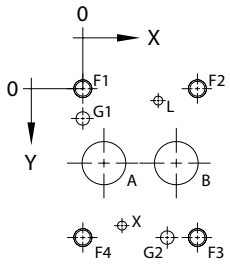

P10 ISO 6264-10-15-*-97
ISO 5781-10-13-0-00
NFPA T3.5.1 R2-2002 P10

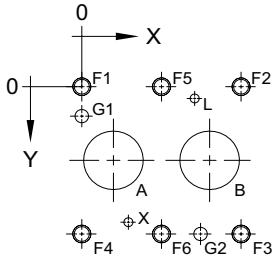

R06 (I06) ISO 6264-06-09-*-97
NFPA T3.5.1 R2-2002 R06

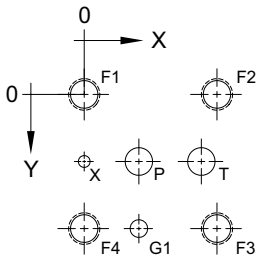

R08 ISO 6264-08-13-*-97
NFPA T3.5.1 R2-2002 R08

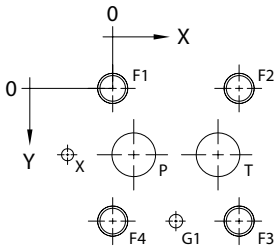

R10 ISO 6264-10-17-*-97
NFPA T3.5.1 R2-2002 R10

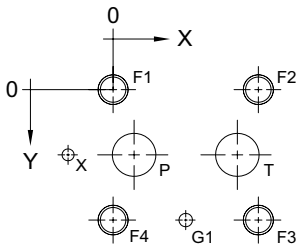

I08 (RV08) NFPA T3.5.1-
R2-2002 RV08

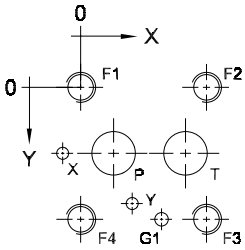

I10 (RV10) NFPA T3.5.1-
R2-2002 RV10

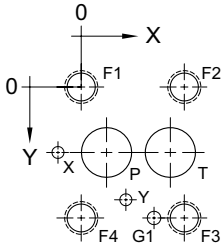

Daman Products Company, Inc. • 1811 North Home Street • Mishawaka, IN 46545-7267
Tel: 800.959.7841 574.259.7841 • Fax: 800.241.7664 • Email: sales@daman.com • www.daman.com

Pattern	Axis	A	B	P	T	X	L	F1	F2	F3	F4	F5	F6	G1	G2
2F06	X	2.126 [54.0]	0.374 [9.5]	--	--	--	--	0 [0]	3.000 [76.2]	3.000 [76.2]	0 [0]	--	--	3.126 [79.4]	--
	Y	0.437 [11.1]	2.063 [52.4]	--	--	--	--	0 [0]	0 [0]	3.252 [82.6]	3.252 [82.6]	--	--	0.937 [23.8]	--
	ϕ (max)	0.579 [14.7]	0.579 [14.7]	--	--	--	--	.31-18 M8	.31-18 M8	.31-18 M8	.31-18 M8	--	--	0.295 [7.5]	--
2F07	X	2.953 [75.0]	0.811 [20.6]	--	--	--	--	0 [0]	4.000 [101.6]	4.000 [101.6]	0 [0]	--	--	-0.032 [-0.8]	4.032 [102.4]
	Y	0.437 [11.1]	3.406 [86.5]	--	--	--	--	0 [0]	0 [0]	4.000 [101.6]	4.000 [101.6]	--	--	1.126 [28.6]	1.126 [28.6]
	ϕ (max)	0.689 [17.5]	0.689 [17.5]	--	--	--	--	.38-16 M10	.38-16 M10	.38-16 M10	.38-16 M10	--	--	0.409 [10.4]	0.409 [10.4]
P06	X	0.280 [7.1]	1.406 [35.7]	--	--	0.843 [21.4]	0.843 [21.4]	0 [0]	1.689 [42.9]	1.689 [42.9]	0 [0]	--	--	0 [0]	1.252 [31.8]
	Y	1.311 [33.3]	1.311 [33.3]	--	--	2.311 [58.7]	0.311 [7.9]	0 [0]	0 [0]	2.626 [66.7]	2.626 [66.7]	--	--	0.563 [14.3]	2.626 [66.7]
	ϕ (max)	0.579 [14.7]	0.579 [14.7]	--	--	0.189 [4.8]	0.189 [4.8]	.38-16 M10	.38-16 M10	.38-16 M10	.38-16 M10	--	--	0.295 [7.5]	0.295 [7.5]
P08	X	0.437 [11.1]	1.937 [49.2]	--	--	0.819 [20.8]	1.563 [39.7]	0 [0]	2.374 [60.3]	2.374 [60.3]	0 [0]	--	--	0 [0]	1.752 [44.5]
	Y	1.563 [39.7]	1.563 [39.7]	--	--	2.874 [73.0]	0.252 [6.4]	0 [0]	0 [0]	3.126 [79.4]	3.126 [79.4]	--	--	0.626 [15.9]	3.126 [79.4]
	ϕ (max)	0.921 [23.4]	0.921 [23.4]	--	--	0.189 [4.8]	0.189 [4.8]	.38-16 M10	.38-16 M10	.38-16 M10	.38-16 M10	--	--	0.295 [7.5]	0.295 [7.5]
P10	X	0.658 [16.7]	2.658 [67.5]	--	--	0.969 [24.6]	2.347 [59.6]	0 [0]	3.311 [84.1]	3.311 [84.1]	0 [0]	1.658 [42.1]	1.658 [42.1]	0 [0]	2.469 [62.7]
	Y	1.906 [48.4]	1.906 [48.4]	--	--	3.658 [92.9]	0.158 [4.0]	0 [0]	0 [0]	3.811 [96.8]	3.811 [96.8]	0 [0]	3.811 [96.8]	0.843 [21.4]	3.811 [96.8]
	ϕ (max)	1.260 [32.0]	1.260 [32.0]	--	--	0.189 [4.8]	0.189 [4.8]	.38-16 M10	.38-16 M10	.38-16 M10	.38-16 M10	.38-16 M10	.38-16 M10	0.295 [7.5]	0.295 [7.5]
R06 (I06)	X	--	--	0.870 [22.1]	1.870 [47.5]	0 [0]	--	0 [0]	2.118 [53.8]	2.118 [53.8]	0 [0]	--	--	0.870 [22.1]	--
	Y	--	--	1.059 [26.9]	1.059 [26.9]	1.059 [26.9]	--	0 [0]	0 [0]	2.118 [53.8]	2.118 [53.8]	--	--	2.118 [53.8]	--
	ϕ (max)	--	--	0.579 [14.7]	0.579 [14.7]	0.189 [4.8]	--	.50-13 M12	.50-13 M12	.50-13 M12	.50-13 M12	--	--	0.295 [7.5]	--
R08	X	--	--	0.437 [11.1]	2.189 [55.6]	-0.937 [-23.8]	--	0 [0]	2.626 [66.7]	2.626 [66.7]	0 [0]	--	--	1.315 [33.4]	--
	Y	--	--	1.378 [35.0]	1.378 [35.0]	1.378 [35.0]	--	0 [0]	0 [0]	2.756 [70.0]	2.756 [70.0]	--	--	2.756 [70.0]	--
	ϕ (max)	--	--	0.921 [23.4]	0.921 [23.4]	0.248 [6.3]	--	.63-11 M16	.63-11 M16	.63-11 M16	.63-11 M16	--	--	0.295 [7.5]	--
R10	X	--	--	0.500 [12.7]	3.000 [76.2]	-1.252 [-31.8]	--	0 [0]	3.500 [88.9]	3.500 [88.9]	0 [0]	--	--	1.752 [44.5]	--
	Y	--	--	1.626 [41.3]	1.626 [41.3]	1.626 [41.3]	--	0 [0]	0 [0]	3.252 [82.6]	3.252 [82.6]	--	--	3.252 [82.6]	--
	ϕ (max)	--	--	1.260 [32.0]	1.260 [32.0]	0.248 [6.3]	--	.75-10 M18	.75-10 M18	.75-10 M18	.75-10 M18	--	--	0.295 [7.5]	--
I08 (RV08)	X	--	--	0.689 [17.5]	2.189 [55.6]	-0.374 [-9.5]	1.441 [36.6]	0 [0]	2.626 [66.7]	2.626 [66.7]	0 [0]	--	--	1.689 [42.9]	--
	Y	--	--	1.378 [35.0]	1.378 [35.0]	1.378 [35.0]	2.248 [57.1]	0 [0]	0 [0]	2.756 [70.0]	2.756 [70.0]	--	--	2.756 [70.0]	--
	ϕ (max)	--	--	0.921 [23.4]	0.921 [23.4]	0.248 [6.3]	0.248 [6.3]	.63-11 M16	.63-11 M16	.63-11 M16	.63-11 M16	--	--	0.295 [7.5]	--
I10 (RV10)	X	--	--	0.563 [14.3]	2.311 [58.7]	-0.626 [-15.9]	1.248 [31.8]	0 [0]	2.626 [66.7]	2.626 [66.7]	0 [0]	--	--	2.000 [50.8]	--
	Y	--	--	1.811 [46.0]	1.811 [46.0]	1.811 [46.0]	3.185 [80.9]	0 [0]	0 [0]	3.626 [92.1]	3.626 [92.1]	--	--	3.626 [92.1]	--
	ϕ (max)	--	--	1.260 [32.0]	1.260 [32.0]	0.248 [6.3]	0.248 [6.3]	.75-10 M18	.75-10 M18	.75-10 M18	.75-10 M18	--	--	0.295 [7.5]	--

Daman Products Company, Inc. • 1811 North Home Street • Mishawaka, IN 46545-7267
Tel: 800.959.7841 574.259.7841 • Fax: 800.241.7664 • Email: sales@daman.com • www.daman.com

Servo Valve Patterns

These drawings are for reference only. Please consult the appropriate standard when dimensions are critical. Dimensions may vary on our products. It should not be assumed that each hole shown is found on a given product.

S01 ISO 10372-01-01-0-92
0.480 port circle

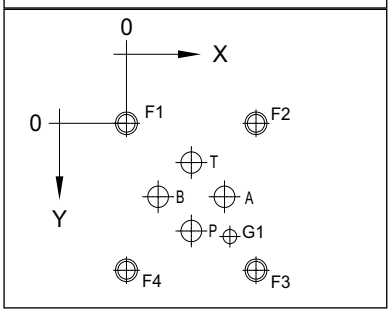

S02 ISO 10372-02-02-0-92
0.625 port circle

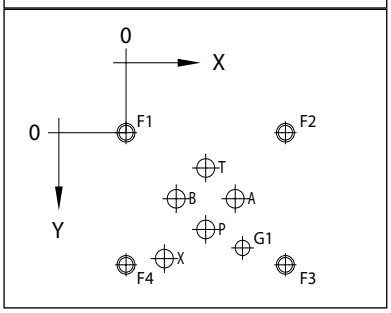

S03 ISO 10372-03-03-0-92
0.780 port circle

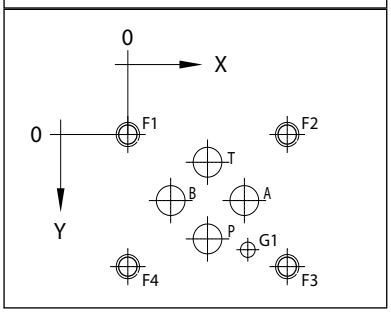

S04 ISO 10372-04-04-0-92
0.875 port circle

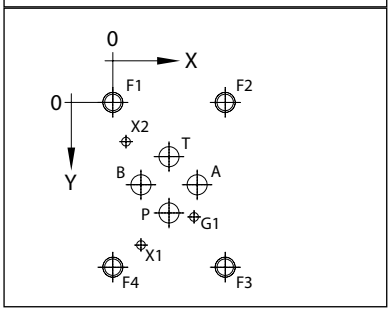

S06 ISO 10372-06-05-0-92
2.000 port circle

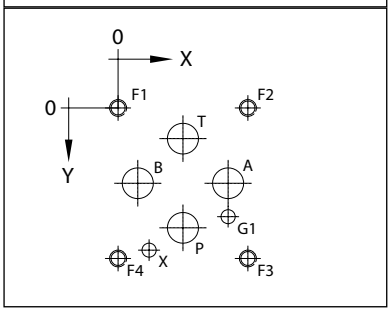

S71 0.780 port circle

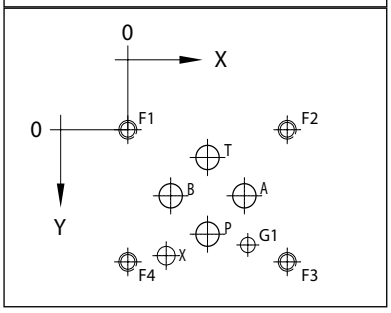

S72 0.938 port circle

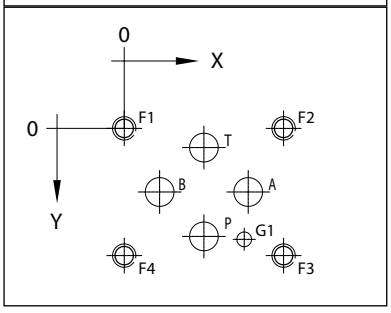

S73 1.375 port circle

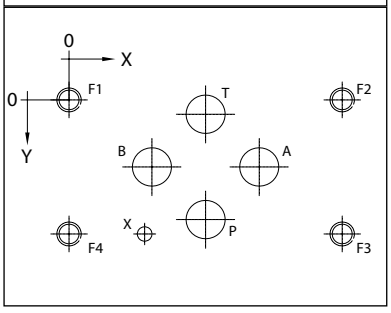

S74 1.750 port circle

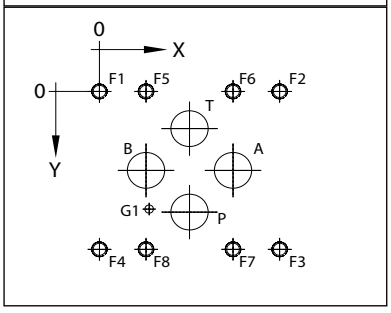

Servo patterns continued pages 234-239

Daman Products Company, Inc. • 1811 North Home Street • Mishawaka, IN 46545-7267
Tel: 800.959.7841 574.259.7841 • Fax: 800.241.7664 • Email: sales@daman.com • www.daman.com

Pattern	Axis	P	A	T	B	X1	X2	F1	F2	F3	F4	F5	F6	F7	F8	G1
S01	X	0.469 [11.9]	0.709 [18.0]	0.469 [11.9]	0.228 [5.8]	--	--	0 [0]	0.937 [23.8]	0.937 [23.8]	0 [0]	--	--	--	--	0.748 [19.0]
	Y	0.756 [19.2]	0.516 [13.1]	0.276 [7.0]	0.516 [13.1]	--	--	0 [0]	0 [0]	1.032 [26.2]	1.032 [26.2]	--	--	--	--	0.795 [20.2]
	ϕ (max)	0.150 [3.8]	0.150 [3.8]	0.150 [3.8]	0.150 [3.8]	--	--	#6-32 M4	#6-32 M4	#6-32 M4	#6-32 M4	--	--	--	--	0.098 [2.5]
S02	X	0.843 [21.4]	1.154 [29.3]	0.843 [21.4]	0.532 [13.5]	0.406 [10.3]	--	0 [0]	1.685 [42.8]	1.685 [42.8]	0 [0]	--	--	--	--	1.232 [31.3]
	Y	0.984 [25.0]	0.673 [17.1]	0.362 [9.2]	0.673 [17.1]	1.283 [32.6]	--	0 [0]	0 [0]	1.347 [34.2]	1.347 [34.2]	--	--	--	--	1.173 [29.8]
	ϕ (max)	0.197 [5.0]	0.197 [5.0]	0.197 [5.0]	0.197 [5.0]	0.095 [2.4]	--	#10-32 M5	#10-32 M5	#10-32 M5	#10-32 M5	--	--	--	--	0.138 [3.5]
S03	X	0.843 [21.4]	1.232 [31.3]	0.843 [21.4]	0.453 [11.5]	--	--	0 [0]	1.685 [42.8]	1.685 [42.8]	0 [0]	--	--	--	--	1.232 [31.3]
	Y	1.063 [27.0]	0.673 [17.1]	0.284 [7.2]	0.673 [17.1]	--	--	0 [0]	0 [0]	1.347 [34.2]	1.347 [34.2]	--	--	--	--	1.173 [29.8]
	ϕ (max)	0.260 [6.6]	0.260 [6.6]	0.260 [6.6]	0.260 [6.6]	--	--	.25-28 M6	.25-28 M6	.25-28 M6	.25-28 M6	--	--	--	--	0.138 [3.5]
S04	X	0.874 [22.2]	1.311 [33.3]	0.874 [22.2]	0.437 [11.1]	0.437 [11.1]	0.205 [5.2]	0 [0]	1.748 [44.4]	1.748 [44.4]	0 [0]	--	--	--	--	1.264 [32.1]
	Y	1.717 [43.6]	1.280 [32.5]	0.843 [21.4]	1.280 [32.5]	2.217 [56.3]	0.610 [15.5]	0 [0]	0 [0]	2.559 [65.0]	2.559 [65.0]	--	--	--	--	1.780 [45.2]
	ϕ (max)	0.323 [8.2]	0.323 [8.2]	0.323 [8.2]	0.323 [8.2]	0.197 [5.0]	0.197 [5.0]	.31-18 M8	.31-18 M8	.31-18 M8	.31-18 M8	--	--	--	--	0.138 [3.5]
S06	X	1.437 [36.5]	2.437 [61.9]	1.437 [36.5]	0.437 [11.1]	0.685 [17.4]	--	0 [0]	2.874 [73.0]	2.874 [73.0]	0 [0]	--	--	--	--	2.437 [61.9]
	Y	2.685 [68.2]	1.685 [42.8]	0.685 [17.4]	1.685 [42.8]	3.189 [81.0]	--	0 [0]	0 [0]	3.370 [85.6]	3.370 [85.6]	--	--	--	--	2.437 [61.9]
	ϕ (max)	0.630 [16.0]	0.630 [16.0]	0.630 [16.0]	0.630 [16.0]	0.197 [5.0]	--	.38-16 M10	.38-16 M10	.38-16 M10	.38-16 M10	--	--	--	--	0.315 [8.0]
S71	X	0.843 [21.4]	1.232 [31.2]	0.843 [21.4]	0.453 [11.4]	0.406 [10.3]	--	0 [0]	1.685 [42.8]	1.685 [42.8]	0 [0]	--	--	--	--	1.232 [31.3]
	Y	1.063 [27.0]	0.673 [17.1]	0.284 [7.2]	0.673 [17.1]	1.284 [32.6]	--	0 [0]	0 [0]	1.347 [34.2]	1.347 [34.2]	--	--	--	--	1.173 [29.8]
	ϕ (max)	0.260 [6.6]	0.260 [6.6]	0.260 [6.6]	0.260 [6.6]	0.095 [2.4]	--	#10-32 M5	#10-32 M5	#10-32 M5	#10-32 M5	--	--	--	--	0.138 [3.5]
S72	X	0.843 [21.4]	1.311 [33.3]	0.843 [21.4]	0.374 [9.5]	--	--	0 [0]	1.685 [42.8]	1.685 [42.8]	0 [0]	--	--	--	--	1.232 [31.3]
	Y	1.142 [29.0]	0.673 [17.1]	0.205 [5.2]	0.673 [17.1]	--	--	0 [0]	0 [0]	1.347 [34.2]	1.347 [34.2]	--	--	--	--	1.173 [29.8]
	ϕ (max)	0.315 [8.0]	0.315 [8.0]	0.315 [8.0]	0.315 [8.0]	--	--	.25-20 M6	.25-20 M6	.25-20 M6	.25-20 M6	--	--	--	--	0.138 [3.5]
S73	X	1.750 [44.5]	2.438 [61.9]	1.750 [44.5]	1.062 [27.0]	0.970 [24.6]	--	0 [0]	3.500 [88.9]	3.500 [88.9]	0 [0]	--	--	--	--	--
	Y	1.563 [39.7]	0.875 [22.3]	0.188 [4.8]	0.875 [22.3]	1.750 [44.5]	--	0 [0]	0 [0]	1.750 [44.5]	1.750 [44.5]	--	--	--	--	--
	ϕ (max)	0.500 [12.7]	0.500 [12.7]	0.500 [12.7]	0.500 [12.7]	0.094 [2.4]	--	.31-18 M8	.31-18 M8	.31-18 M8	.31-18 M8	--	--	--	--	--
S74	X	1.813 [46.1]	2.688 [68.3]	1.813 [46.1]	0.938 [23.8]	--	--	0 [0]	3.625 [92.1]	3.625 [92.1]	0 [0]	0.938 [23.8]	2.688 [68.3]	2.688 [68.3]	0.938 [23.8]	1.000 [25.4]
	Y	2.531 [64.3]	1.656 [42.1]	0.781 [19.8]	1.656 [42.1]	--	--	0 [0]	0 [0]	3.313 [84.2]	3.313 [84.2]	0 [0]	0 [0]	3.313 [84.2]	3.313 [84.2]	2.469 [62.7]
	ϕ (max)	0.750 [19.1]	0.750 [19.1]	0.750 [19.1]	0.750 [19.1]	--	--	.31-24 M8	.31-24 M8	.31-24 M8	.31-24 M8	.31-24 M8	.31-24 M8	.31-24 M8	.31-24 M8	0.138 [3.5]

Daman Products Company, Inc. • 1811 North Home Street • Mishawaka, IN 46545-7267
Tel: 800.959.7841 574.259.7841 • Fax: 800.241.7664 • Email: sales@daman.com • www.daman.com

Servo Valve Patterns

These drawings are for reference only. Please consult the appropriate standard when dimensions are critical. Dimensions may vary on our products. It should not be assumed that each hole shown is found on a given product.

S75 2.750 port circle

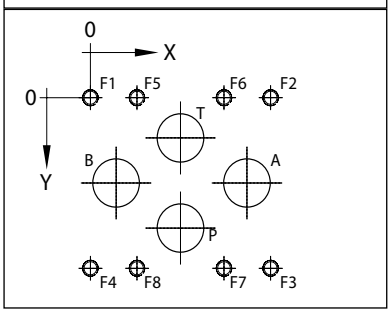

S76

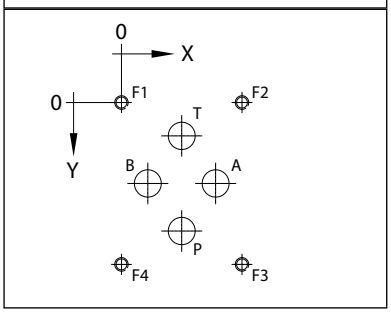

S77 1.750 port circle

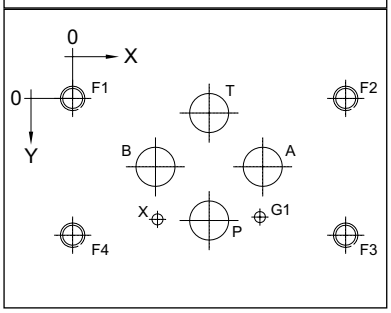

S78

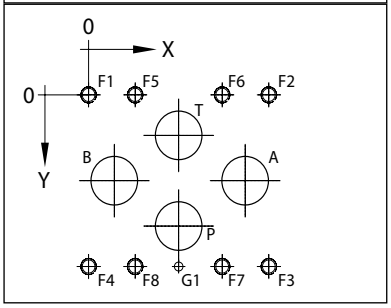

S79

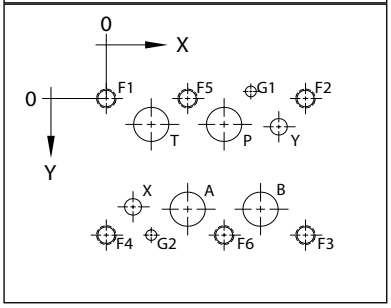

S81

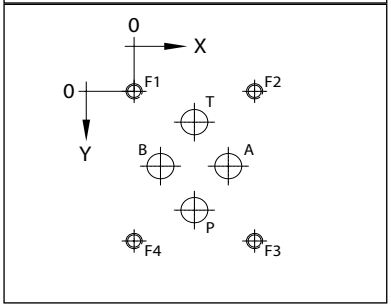

S82

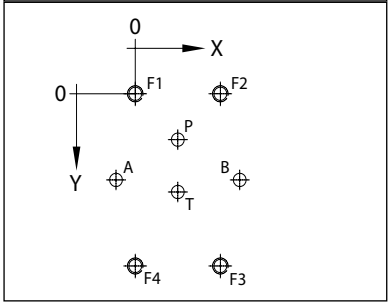

S83 0.625 port circle

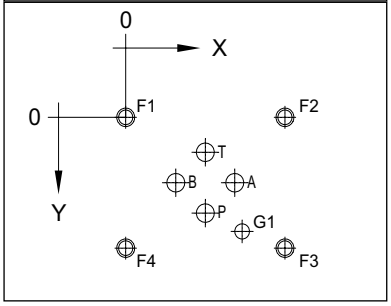

S84 0.740 port circle

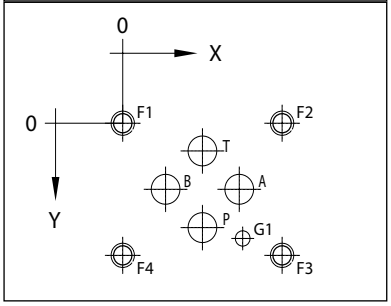

Servo patterns continued pages 236-239

Daman Products Company, Inc. • 1811 North Home Street • Mishawaka, IN 46545-7267
Tel: 800.959.7841 574.259.7841 • Fax: 800.241.7664 • Email: sales@daman.com • www.daman.com

Pattern	Axis	P	A	T	B	X	Y	F1	F2	F3	F4	F5	F6	F7	F8	G1	G2
S75	X	2.000 [50.8]	3.375 [85.7]	2.000 [50.8]	0.625 [15.9]	--	--	0 [0]	4.000 [101.6]	4.000 [101.6]	0 [0]	1.000 [25.4]	3.000 [76.2]	3.000 [76.2]	1.000 [25.4]	--	--
	Y	3.625 [92.1]	2.250 [57.2]	0.875 [22.2]	2.250 [57.2]	--	--	0 [0]	0 [0]	4.500 [114.3]	4.500 [114.3]	0 [0]	0 [0]	4.500 [114.3]	4.500 [114.3]	--	--
	ϕ (max)	1.000 [25.4]	1.000 [25.4]	1.000 [25.4]	1.000 [25.4]	--	--	.50-13 M12	.50-13 M12	.50-13 M12	.50-13 M12	.50-13 M12	.50-13 M12	.50-13 M12	.50-13 M12	--	--
S76	X	1.120 [28.5]	1.750 [44.5]	1.120 [28.5]	0.490 [12.5]	--	--	0 [0]	2.240 [56.9]	2.240 [56.9]	0 [0]	--	--	--	--	--	--
	Y	2.357 [59.9]	1.483 [37.6]	0.610 [15.5]	1.483 [37.6]	--	--	0 [0]	0 [0]	2.967 [75.4]	2.967 [75.4]	--	--	--	--	--	--
	ϕ (max)	0.500 [12.7]	0.500 [12.7]	0.500 [12.7]	0.500 [12.7]	--	--	.25-20 M6	.25-20 M6	.25-20 M6	.25-20 M6	--	--	--	--	--	--
S77	X	1.813 [46.0]	2.688 [68.3]	1.813 [46.0]	0.937 [23.8]	1.025 [26.0]	--	0 [0]	3.625 [92.1]	3.625 [92.1]	0 [0]	--	--	--	--	2.625 [66.7]	--
	Y	2.063 [52.4]	1.187 [30.2]	0.312 [7.9]	1.187 [30.2]	2.054 [52.2]	--	0 [0]	0 [0]	2.375 [60.3]	2.375 [60.3]	--	--	--	--	2.000 [50.8]	--
	ϕ (max)	0.625 [15.9]	0.625 [15.9]	0.625 [15.9]	0.625 [15.9]	0.125 [3.2]	--	.31-18 M8	.31-18 M8	.31-18 M8	.31-18 M8	--	--	--	--	0.157 [4.0]	--
S78	X	2.181 [55.4]	3.741 [95.0]	2.181 [55.4]	0.621 [15.8]	--	--	0 [0]	4.362 [110.8]	4.362 [110.8]	0 [0]	1.241 [31.5]	3.121 [79.3]	3.121 [79.3]	1.241 [31.5]	2.181 [55.4]	--
	Y	3.435 [87.2]	2.310 [58.7]	1.185 [30.1]	2.310 [58.7]	--	--	0 [0]	0 [0]	4.620 [117.3]	4.620 [117.3]	0 [0]	0 [0]	4.620 [117.3]	4.620 [117.3]	4.620 [117.3]	--
	ϕ (max)	1.125 [28.6]	1.125 [28.6]	1.125 [28.6]	1.125 [28.6]	--	--	.62-11 M16	.62-11 M16	.62-11 M16	.62-11 M16	.62-11 M16	.62-11 M16	.62-11 M16	.62-11 M16	0.313 [7.9]	--
S79	X	3.031 [77.0]	2.094 [53.2]	1.157 [29.4]	3.969 [100.8]	0.689 [17.5]	4.437 [112.7]	0 [0]	5.126 [130.2]	5.126 [130.2]	0 [0]	2.094 [53.2]	3.031 [77.0]	--	--	3.720 [94.5]	1.157 [29.4]
	Y	0.689 [17.5]	2.937 [74.6]	0.689 [17.5]	2.937 [74.6]	2.874 [73.0]	0.748 [19.0]	0 [0]	0 [0]	3.626 [92.1]	3.626 [92.1]	0 [0]	3.626 [92.1]	--	--	-0.189 [-4.8]	3.626 [92.1]
	ϕ (max)	0.984 [25.0]	0.984 [25.0]	0.984 [25.0]	0.984 [25.0]	0.441 [11.2]	0.441 [11.2]	.44-14 M12	.44-14 M12	.44-14 M12	.44-14 M12	.44-14 M12	.44-14 M12	--	--	0.295 [7.5]	0.295 [7.5]
S81	X	1.120 [28.4]	1.750 [44.5]	1.120 [28.4]	0.490 [12.4]	--	--	0 [0]	2.240 [56.9]	2.240 [56.9]	0 [0]	--	--	--	--	--	--
	Y	2.375 [60.3]	1.500 [38.1]	0.625 [15.9]	1.500 [38.1]	--	--	0 [0]	0 [0]	3.000 [76.2]	3.000 [76.2]	--	--	--	--	--	--
	ϕ (max)	0.500 [12.7]	0.500 [12.7]	0.500 [12.7]	0.500 [12.7]	--	--	.31-18 M8	.31-18 M8	.31-18 M8	.31-18 M8	--	--	--	--	--	--
S82	X	0.433 [11.0]	-0.197 [-5.0]	0.433 [11.0]	1.063 [27.0]	--	--	0 [0]	0.866 [22.0]	0.866 [22.0]	0 [0]	--	--	--	--	--	--
	Y	0.449 [11.4]	0.843 [21.4]	0.961 [24.4]	0.843 [21.4]	--	--	0 [0]	0 [0]	1.677 [42.6]	1.677 [42.6]	--	--	--	--	--	--
	ϕ (max)	0.130 [3.3]	0.130 [3.3]	0.130 [3.3]	0.130 [3.3]	--	--	M4 M4	M4 M4	M4 M4	M4 M4	--	--	--	--	--	--
S83	X	0.843 [21.4]	1.154 [29.3]	0.843 [21.4]	0.531 [13.5]	--	--	0 [0]	1.685 [42.8]	1.685 [42.8]	0 [0]	--	--	--	--	1.232 [31.3]	--
	Y	0.984 [25.0]	0.673 [17.1]	0.358 [9.1]	0.673 [17.1]	--	--	0 [0]	0 [0]	1.347 [34.2]	1.347 [34.2]	--	--	--	--	1.173 [29.8]	--
	ϕ (max)	0.191 [4.85]	0.191 [4.85]	0.191 [4.85]	0.191 [4.85]	--	--	.25-20 M6	.25-20 M6	.25-20 M6	.25-20 M6	--	--	--	--	0.138 [3.5]	--
S84	X	0.844 [21.4]	1.214 [30.8]	0.844 [21.4]	0.474 [12.0]	--	--	0 [0]	1.685 [42.8]	1.685 [42.8]	0 [0]	--	--	--	--	--	--
	Y	1.042 [26.5]	0.672 [17.1]	0.302 [7.67]	0.672 [17.1]	--	--	0 [0]	0 [0]	1.347 [34.2]	1.347 [34.2]	--	--	--	--	--	--
	ϕ (max)	0.260 [6.6]	0.260 [6.6]	0.260 [6.6]	0.260 [6.6]	--	--	#10-32 M5	#10-32 M5	#10-32 M5	#10-32 M5	--	--	--	--	--	--

Daman Products Company, Inc. • 1811 North Home Street • Mishawaka, IN 46545-7267
Tel: 800.959.7841 574.259.7841 • Fax: 800.241.7664 • Email: sales@daman.com • www.daman.com

Servo Valve Patterns

These drawings are for reference only. Please consult the appropriate standard when dimensions are critical. Dimensions may vary on our products. It should not be assumed that each hole shown is found on a given product.

S85 0.850 port circle

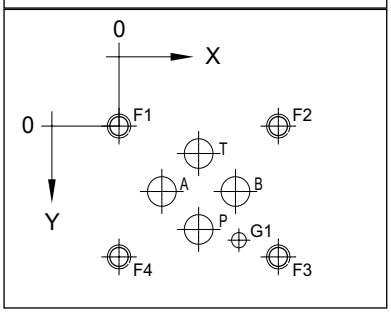

S86 1.000 port circle

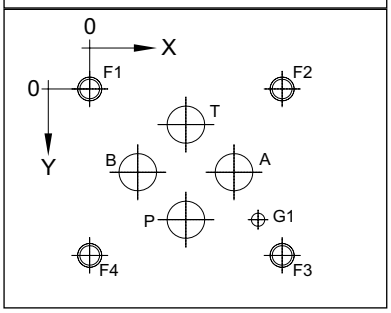

S87 1.000 port circle

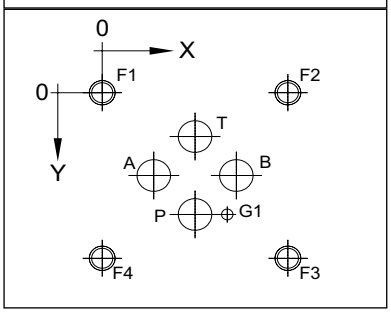

S88 1.800 port circle

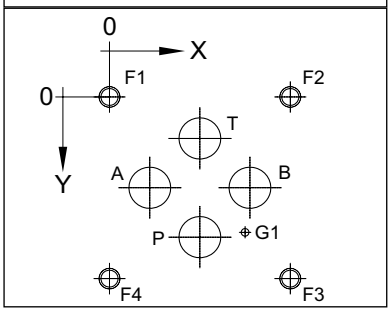

S89

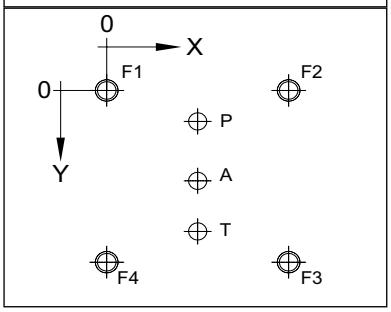

S90 1.000 port circle

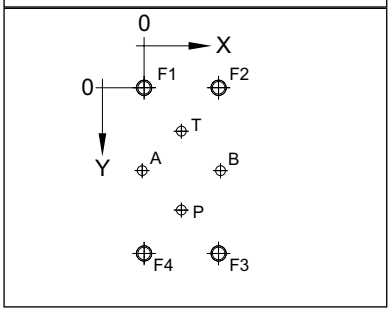

S91

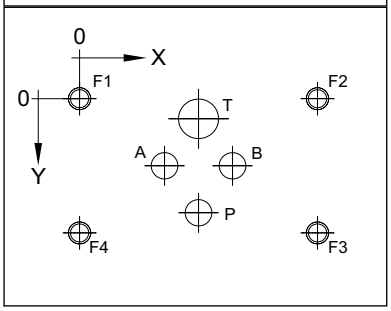

S92

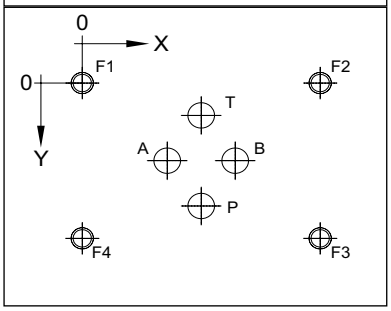

S93 0.850 port circle

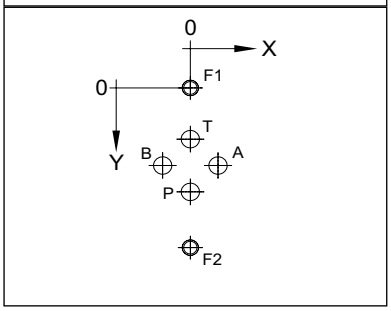

Servo patterns continued pages 238-239

Daman Products Company, Inc. • 1811 North Home Street • Mishawaka, IN 46545-7267
Tel: 800.959.7841 574.259.7841 • Fax: 800.241.7664 • Email: sales@daman.com • www.daman.com

Pattern	Axis	P	A	T	B	X	Y	F1	F2	F3	F4	F5	F6	F7	F8	G1	G2
S85	X	0.843 [21.4]	0.418 [10.6]	0.843 [21.4]	1.268 [32.2]	--	--	0 [0]	1.685 [42.8]	1.685 [42.8]	0 [0]	--	--	--	--	1.232 [31.3]	--
	Y	1.098 [27.9]	0.673 [17.1]	0.248 [6.3]	0.673 [17.1]	--	--	0 [0]	0 [0]	1.347 [34.2]	1.347 [34.2]	--	--	--	--	1.173 [29.8]	--
	ϕ (max)	0.327 [8.3]	0.327 [8.3]	0.327 [8.3]	0.327 [8.3]	--	--	.25-20 M6	.25-20 M6	.25-20 M6	.25-20 M6	--	--	--	--	0.138 [3.5]	--
S86	X	1.000 [25.4]	1.500 [38.1]	1.000 [25.4]	0.500 [12.7]	--	--	0 [0]	2.000 [50.8]	2.000 [50.8]	0 [0]	--	--	--	--	1.750 [44.5]	--
	Y	1.375 [34.9]	0.875 [22.2]	0.375 [9.5]	0.875 [22.2]	--	--	0 [0]	0 [0]	1.750 [44.5]	1.750 [44.5]	--	--	--	--	1.375 [34.9]	--
	ϕ (max)	0.390 [9.9]	0.390 [9.9]	0.390 [9.9]	0.390 [9.9]	--	--	.25-20 M6	.25-20 M6	.25-20 M6	.25-20 M6	--	--	--	--	0.138 [3.5]	--
S87	X	1.125 [28.6]	0.625 [15.9]	1.125 [28.6]	1.625 [41.3]	--	--	0 [0]	2.250 [57.2]	2.250 [57.2]	0 [0]	--	--	--	--	1.515 [38.5]	--
	Y	1.563 [39.7]	1.063 [27.0]	0.563 [14.3]	1.063 [27.0]	--	--	0 [0]	0 [0]	2.125 [54.0]	2.125 [54.0]	--	--	--	--	1.563 [39.7]	--
	ϕ (max)	0.410 [10.4]	0.410 [10.4]	0.410 [10.4]	0.410 [10.4]	--	--	.31-18 M8	.31-18 M8	.31-18 M8	.31-18 M8	--	--	--	--	0.138 [3.5]	--
S88	X	1.625 [41.3]	0.725 [18.4]	2.18 [55.4]	2.525 [64.1]	--	--	0 [0]	3.250 [82.6]	3.250 [82.6]	0 [0]	--	--	--	--	2.438 [61.9]	--
	Y	2.556 [64.9]	1.656 [42.1]	0.756 [19.2]	1.656 [42.1]	--	--	0 [0]	0 [0]	3.313 [84.1]	3.313 [84.1]	--	--	--	--	2.469 [62.7]	--
	ϕ (max)	0.750 [19.1]	0.750 [19.1]	0.750 [19.1]	0.750 [19.1]	--	--	.38-16 M10	.38-16 M10	.38-16 M10	.38-16 M10	--	--	--	--	0.138 [3.5]	--
S89	X	0.781 [19.8]	0.781 [19.8]	0.781 [19.8]	--	--	--	0 [0]	1.563 [39.7]	1.563 [39.7]	0 [0]	--	--	--	--	--	--
	Y	0.281 [7.1]	0.821 [20.9]	1.281 [32.5]	--	--	--	0 [0]	0 [0]	1.563 [39.7]	1.563 [39.7]	--	--	--	--	--	--
	ϕ (max)	0.156 [4.0]	0.156 [4.0]	0.156 [4.0]	--	--	--	#10-24 M5	#10-24 M5	#10-24 M5	#10-24 M5	--	--	--	--	--	--
S90	X	0.474 [12.1]	-0.026 [-0.65]	0.474 [12.1]	0.974 [24.8]	--	--	0 [0]	0.949 [24.1]	0.949 [24.1]	0 [0]	--	--	--	--	--	--
	Y	1.549 [39.4]	1.049 [26.7]	0.549 [14.0]	1.049 [26.7]	--	--	0 [0]	0 [0]	2.098 [53.3]	2.098 [53.3]	--	--	--	--	--	--
	ϕ (max)	0.126 [3.2]	0.126 [3.2]	0.126 [3.2]	0.126 [3.2]	--	--	#10-24 M5	#10-24 M5	#10-24 M5	#10-24 M5	--	--	--	--	--	--
S91	X	0.875 [22.2]	0.625 [15.9]	0.875 [22.2]	1.125 [28.6]	--	--	0 [0]	1.750 [44.5]	1.750 [44.5]	0 [0]	--	--	--	--	--	--
	Y	0.850 [21.6]	0.500 [12.7]	0.150 [3.8]	0.500 [12.7]	--	--	0 [0]	0 [0]	1.000 [25.4]	1.000 [25.4]	--	--	--	--	--	--
	ϕ (max)	0.188 [4.8]	0.188 [4.8]	0.188 [4.8]	0.188 [4.8]	--	--	#4-40	#4-40	#4-40	#4-40	--	--	--	--	--	--
S92	X	0.875 [22.2]	0.625 [12.7]	0.875 [22.2]	1.125 [28.6]	--	--	0 [0]	1.750 [44.5]	1.750 [44.5]	0 [0]	--	--	--	--	--	--
	Y	0.950 [24.1]	0.600 [15.2]	0.250 [6.4]	0.600 [15.2]	--	--	0 [0]	0 [0]	1.200 [30.5]	1.200 [30.5]	--	--	--	--	--	--
	ϕ (max)	0.188 [4.8]	0.188 [4.8]	0.188 [4.8]	0.188 [4.8]	--	--	#8-32 M4	#8-32 M4	#8-32 M4	#8-32 M4	--	--	--	--	--	--
S93	X	0 [0]	-0.425 [-10.8]	0 [0]	0.425 [10.8]	--	--	0 [0]	0 [0]	--	--	--	--	--	--	--	--
	Y	1.675 [42.5]	1.250 [31.8]	0.825 [21.0]	1.250 [31.8]	--	--	0 [0]	2.500 [63.5]	--	--	--	--	--	--	--	--
	ϕ (max)	0.281 [7.1]	0.281 [7.1]	0.281 [7.1]	0.281 [7.1]	--	--	.25-20 M6	.25-20 M6	--	--	--	--	--	--	--	--

Daman Products Company, Inc. • 1811 North Home Street • Mishawaka, IN 46545-7267
Tel: 800.959.7841 574.259.7841 • Fax: 800.241.7664 • Email: sales@daman.com • www.daman.com

Servo Valve Patterns

These drawings are for reference only. Please consult the appropriate standard when dimensions are critical. Dimensions may vary on our products. It should not be assumed that each hole shown is found on a given product.

S94

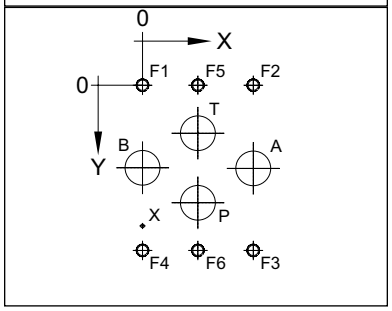

S95 2.000 port circle

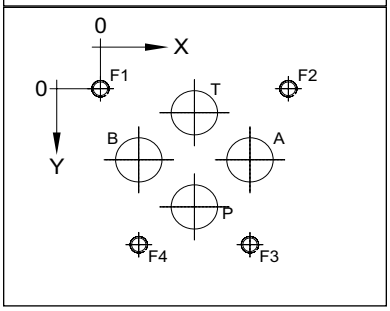

D03 ISO 4401-03-03-0-05

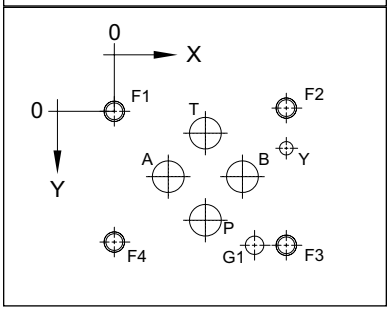

D05HE ISO 4401-05-05-0-05
Moog D634, D661, D681, D691

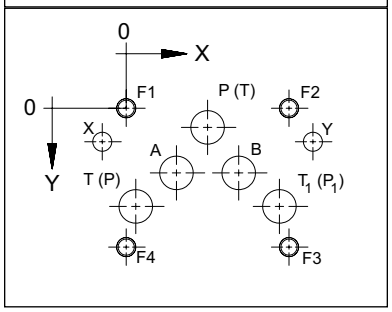

D05-S1 Moog 631, 641, 651

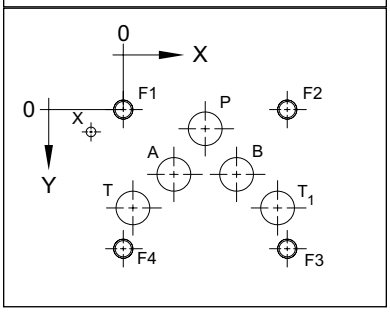

D05-S2 Moog G631

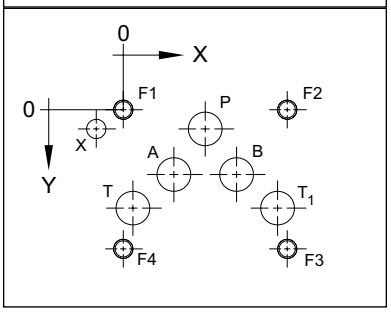

D05-S3 Parker SE31

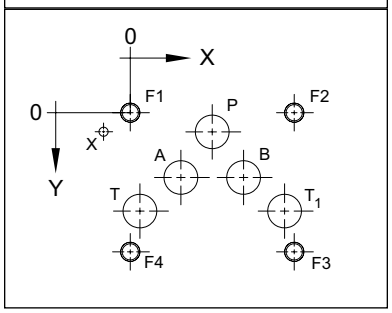

D05-S4 Rexroth **S*2E*10-4X

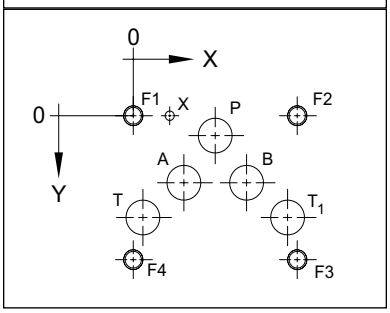

D05-S5 CEI 90200

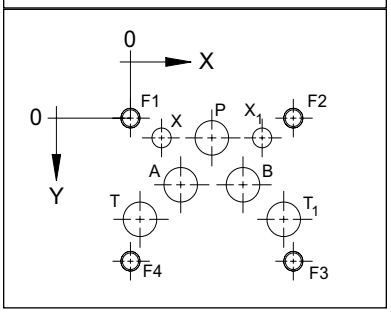

D06, D07, D08, D10: Same as ISO / NFPA directional valve patterns. See pages 228-229 for dimensions.

Daman Products Company, Inc. • 1811 North Home Street • Mishawaka, IN 46545-7267
Tel: 800.959.7841 574.259.7841 • Fax: 800.241.7664 • Email: sales@daman.com • www.daman.com

Pattern	Axis	P	A	T	T_1	B	X	X_1	Y	F1	F2	F3	F4	F5	F6	G1	G2
S94	X	1.375 [34.9]	2.750 [69.9]	1.375 [34.9]	--	0 [0]	0 [0]	--	--	0 [0]	2.750 [69.9]	2.750 [69.9]	0 [0]	1.375 [34.9]	1.375 [34.9]	--	--
	Y	2.938 [74.6]	2.063 [52.4]	1.188 [30.2]	--	2.063 [52.4]	3.513 [89.2]	--	--	0 [0]	0 [0]	4.125 [104.8]	4.125 [104.8]	0 [0]	4.125 [104.8]	--	--
	ϕ (max)	0.865 [22.0]	0.865 [22.0]	0.865 [22.0]	--	0.865 [22.0]	0.094 [2.4]	--	--	.31-18 M8	.31-18 M8	.31-18 M8	.31-18 M8	.31-18 M8	.31-18 M8	--	--
S95	X	1.900 [48.3]	0.900 [22.9]	1.900 [48.3]	--	2.900 [73.7]	--	--	--	0 [0]	3.800 [96.5]	3.025 [76.8]	0.775 [19.7]	--	--	--	--
	Y	2.510 [63.8]	1.510 [38.4]	0.510 [13.0]	--	1.510 [38.4]	--	--	--	0 [0]	0 [0]	3.313 [84.1]	3.313 [84.1]	--	--	--	--
	ϕ (max)	0.938 [23.8]	0.938 [23.8]	0.938 [23.8]	--	0.938 [23.8]	--	--	--	.38-16 M10	.38-16 M10	.38-16 M10	.38-16 M10	--	--	--	--
D03	X	0.847 [21.5]	0.500 [12.7]	0.847 [21.5]	--	1.189 [30.2]	--	--	1.595 [40.5]	0 [0]	1.595 [40.5]	1.595 [40.5]	0 [0]	--	--	1.299 [33.0]	--
	Y	1.020 [25.9]	0.610 [15.5]	0.201 [5.1]	--	0.610 [15.5]	--	--	0.354 [9.0]	0 [0]	-0.030 [-0.75]	1.250 [31.75]	1.221 [31.0]	--	--	1.250 [31.75]	--
	ϕ (max)	0.295 [7.5]	0.295 [7.5]	0.295 [7.5]	--	0.295 [7.5]	--	--	0.130 [3.3]	#10-24 M5	#10-24 M5	#10-24 M5	#10-24 M5	--	--	0.158 [4.0]	--
D05HE	X	1.063 [27.0]	0.658 [16.7]	0.126 [3.2]	2.000 [50.8]	1.469 [37.3]	-0.315 [-8.0]	--	2.441 [62.0]	0 [0]	2.126 [54.0]	2.126 [54.0]	0 [0]	--	--	--	--
	Y	0.248 [6.3]	0.843 [21.4]	1.280 [32.5]	1.280 [32.5]	0.843 [21.4]	0.433 [11.0]	--	0.433 [11.0]	0 [0]	0 [0]	1.811 [46.0]	1.811 [46.0]	--	--	--	--
	ϕ (max)	0.441 [11.2]	0.441 [11.2]	0.441 [11.2]	0.441 [11.2]	0.441 [11.2]	0.248 [6.3]	--	0.248 [6.3]	.25-20 M6	.25-20 M6	.25-20 M6	.25-20 M6	--	--	--	--
D05-S1	X	1.063 [27.0]	0.658 [16.7]	0.126 [3.2]	2.000 [50.8]	1.469 [37.3]	-0.417 [-10.6]	--	--	0 [0]	2.126 [54.0]	2.126 [54.0]	0 [0]	--	--	--	--
	Y	0.248 [6.3]	0.843 [21.4]	1.280 [32.5]	1.280 [32.5]	0.843 [21.4]	0.291 [7.4]	--	--	0 [0]	0 [0]	1.811 [46.0]	1.811 [46.0]	--	--	--	--
	ϕ (max)	0.441 [11.2]	0.441 [11.2]	0.441 [11.2]	0.441 [11.2]	0.441 [11.2]	0.125 [3.2]	--	--	.25-20 M6	.25-20 M6	.25-20 M6	.25-20 M6	--	--	--	--
D05-S2	X	1.063 [27.0]	0.658 [16.7]	0.126 [3.2]	2.000 [50.8]	1.469 [37.3]	-0.354 [-9.0]	--	--	0 [0]	2.126 [54.0]	2.126 [54.0]	0 [0]	--	--	--	--
	Y	0.248 [6.3]	0.843 [21.4]	1.280 [32.5]	1.280 [32.5]	0.843 [21.4]	0.252 [6.4]	--	--	0 [0]	0 [0]	1.811 [46.0]	1.811 [46.0]	--	--	--	--
	ϕ (max)	0.441 [11.2]	0.441 [11.2]	0.441 [11.2]	0.441 [11.2]	0.441 [11.2]	0.248 [6.3]	--	--	.25-20 M6	.25-20 M6	.25-20 M6	.25-20 M6	--	--	--	--
D05-S3	X	1.063 [27.0]	0.658 [16.7]	0.126 [3.2]	2.000 [50.8]	1.469 [37.3]	-0.346 [-8.8]	--	--	0 [0]	2.126 [54.0]	2.126 [54.0]	0 [0]	--	--	--	--
	Y	0.248 [6.3]	0.843 [21.4]	1.280 [32.5]	1.280 [32.5]	0.843 [21.4]	0.248 [6.3]	--	--	0 [0]	0 [0]	1.811 [46.0]	1.811 [46.0]	--	--	--	--
	ϕ (max)	0.441 [11.2]	0.441 [11.2]	0.441 [11.2]	0.441 [11.2]	0.441 [11.2]	0.118 [3.0]	--	--	.25-20 M6	.25-20 M6	.25-20 M6	.25-20 M6	--	--	--	--
D05-S4	X	1.063 [27.0]	0.658 [16.7]	0.126 [3.2]	2.000 [50.8]	1.469 [37.3]	0.472 [12.0]	--	--	0 [0]	2.126 [54.0]	2.126 [54.0]	0 [0]	--	--	--	--
	Y	0.248 [6.3]	0.843 [21.4]	1.280 [32.5]	1.280 [32.5]	0.843 [21.4]	0 [0]	--	--	0 [0]	0 [0]	1.811 [46.0]	1.811 [46.0]	--	--	--	--
	ϕ (max)	0.441 [11.2]	0.441 [11.2]	0.441 [11.2]	0.441 [11.2]	0.441 [11.2]	0.118 [3.0]	--	--	.25-20 M6	.25-20 M6	.25-20 M6	.25-20 M6	--	--	--	--
D05-S5	X	1.063 [27.0]	0.658 [16.7]	0.126 [3.2]	2.000 [50.8]	1.469 [37.3]	0.406 [10.3]	1.719 [43.7]	--	0 [0]	2.126 [54.0]	2.126 [54.0]	0 [0]	--	--	--	--
	Y	0.248 [6.3]	0.843 [21.4]	1.280 [32.5]	1.280 [32.5]	0.843 [21.4]	0.248 [6.3]	0.248 [6.3]	--	0 [0]	0 [0]	1.811 [46.0]	1.811 [46.0]	--	--	--	--
	ϕ (max)	0.441 [11.2]	0.441 [11.2]	0.441 [11.2]	0.441 [11.2]	0.441 [11.2]	0.248 [6.3]	0.248 [6.3]	--	.25-28 M6	.25-28 M6	.25-28 M6	.25-28 M6	--	--	--	--

Daman Products Company, Inc. • 1811 North Home Street • Mishawaka, IN 46545-7267
Tel: 800.959.7841 574.259.7841 • Fax: 800.241.7664 • Email: sales@daman.com • www.daman.com

“Obsolete Valve” Patterns

These drawings are for reference only. Please consult the appropriate standard when dimensions are critical. Dimensions may vary on our products. It should not be assumed that each hole shown is found on a given product.

Racine 01Q

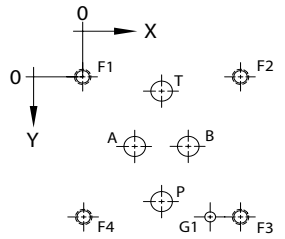

Racine 01S

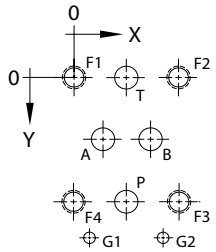

Parker D1B

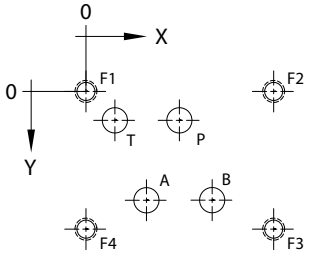

Denison D1D04

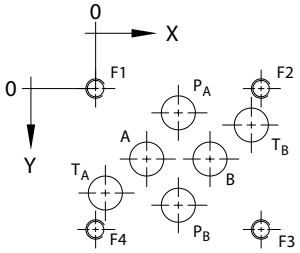

Vickers D1L • Rexroth WE5

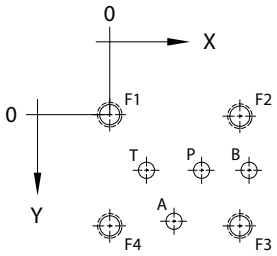

Vickers DG4M4

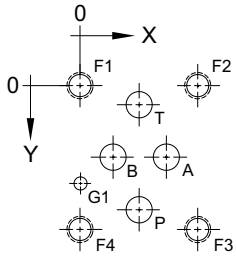

Republic R8143

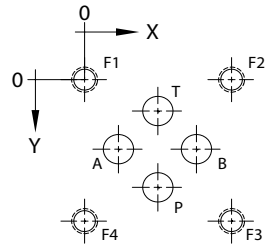

Rivett RVT65

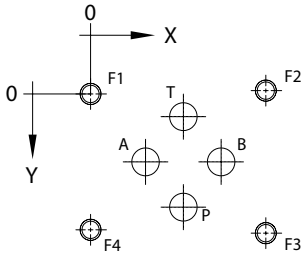

Vickers DG4S4-02
(Same as D06 • NFPA T3.5.1 R2 D06)

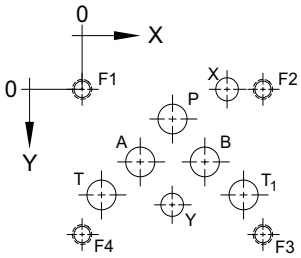

Daman Products Company, Inc. • 1811 North Home Street • Mishawaka, IN 46545-7267
Tel: 800.959.7841 574.259.7841 • Fax: 800.241.7664 • Email: sales@daman.com • www.daman.com

Pattern	Axis	P	A	T	T_1	B	X (P_B)	Y	F1	F2	F3	F4	G1	G2
01Q	X	0.91 [23.0]	0.59 [15.1]	0.91 [23.0]	--	1.22 [31.0]	--	--	0 [0]	1.81 [46.0]	1.81 [46.0]	0 [0]	1.47 [37.3]	--
	Y	1.56 [39.7]	0.88 [22.2]	0.19 [4.9]	--	0.88 [22.3]	--	--	0 [0]	0 [0]	1.75 [44.5]	1.75 [44.5]	1.75 [44.5]	--
	ϕ (max)	0.25 [6.3]	0.19 [4.8]	0.25 [6.3]	--	0.19 [4.8]	--	--	#10-24 #10-24	#10-24 #10-24	#10-24 #10-24	#10-24 #10-24	0.16 [4.0]	--
01S	X	0.61 [15.5]	0.30 [7.6]	0.61 [15.5]	--	0.92 [23.4]	--	--	0 [0]	1.22 [30.9]	1.22 [30.9]	0 [0]	0.24 [6.1]	0.98 [25.0]
	Y	1.37 [35.0]	0.69 [17.5]	0 [0]	--	0.69 [17.5]	--	--	0 [0]	0 [0]	1.37 [35.0]	1.37 [35.0]	1.75 [44.5]	1.75 [44.5]
	ϕ (max)	0.25 [6.3]	0.19 [4.8]	0.25 [6.3]	--	0.19 [4.8]	--	--	.25-20 .25-20	.25-20 .25-20	.25-20 .25-20	.25-20 .25-20	0.16 [4.0]	0.16 [4.0]
D1B	X	0.81 [20.6]	0.53 [13.5]	0.25 [6.4]	--	1.09 [27.7]	--	--	0 [0]	1.63 [41.3]	1.63 [41.3]	0 [0]	--	--
	Y	0.25 [6.4]	0.94 [23.8]	0.25 [6.4]	--	0.94 [23.8]	--	--	0 [0]	0 [0]	1.19 [30.2]	1.19 [30.2]	--	--
	ϕ (max)	0.22 [5.6]	0.22 [5.6]	0.22 [5.6]	--	0.22 [5.6]	--	--	#10-32 #10-32	#10-32 #10-32	#10-32 #10-32	#10-32 #10-32	--	--
D1D04	X	1.06 [27.0]	0.72 [16.3]	0.16 [4.0]	1.97 [50.0]	1.44 [36.5]	1.06 [27.0]	--	0 [0]	2.125 [54.0]	2.125 [54.0]	0 [0]	--	--
	Y	0.34 [8.7]	0.91 [23.0]	1.22 [31.0]	0.59 [15.1]	0.91 [23.0]	1.47 [37.3]	--	0 [0]	0 [0]	1.812 [46.0]	1.812 [46.0]	--	--
	ϕ (max)	0.38 [9.6]	0.38 [9.6]	0.38 [9.6]	0.38 [9.6]	0.38 [9.6]	0.38 [9.6]	--	.25-20 .25-20	.25-20 .25-20	.25-20 .25-20	.25-20 .25-20	--	--
D1L, WE5	X	0.72 [18.1]	0.51 [12.8]	0.30 [7.4]	--	1.09 [27.6]	--	--	0 [0]	1.02 [25.6]	1.02 [25.6]	0 [0]	--	--
	Y	0.42 [10.9]	0.81 [20.7]	0.42 [10.9]	--	0.42 [10.9]	--	--	0 [0]	0 [0]	0.84 [21.4]	0.84 [21.4]	--	--
	ϕ (max)	0.13 [3.2]	0.13 [3.2]	0.13 [3.2]	--	0.13 [3.2]	--	--	#10-24 #10-24	#10-24 #10-24	#10-24 #10-24	#10-24 #10-24	--	--
DG4M4	X	0.57 [14.4]	0.82 [20.6]	0.57 [14.4]	--	0.32 [8.1]	--	--	0 [0]	1.13 [28.7]	1.13 [28.7]	0 [0]	0 [0]	--
	Y	1.19 [30.1]	0.69 [17.5]	0.19 [4.8]	--	0.69 [17.5]	--	--	0 [0]	0 [0]	1.37 [34.7]	1.37 [34.7]	0.94 [23.8]	--
	ϕ (max)	0.25 [6.3]	0.25 [6.3]	0.25 [6.3]	--	0.25 [6.3]	--	--	.25-20 .25-20	.25-20 .25-20	.25-20 .25-20	.25-20 .25-20	0.16 [4.0]	--
R8143	X	1.06 [27.0]	0.50 [12.7]	1.06 [27.0]	--	0.50 [12.7]	--	--	0 [0]	2.13 [54.0]	2.13 [54.0]	0 [0]	--	--
	Y	1.60 [40.6]	1.05 [26.7]	0.48 [12.2]	--	1.05 [26.7]	--	--	0 [0]	0 [0]	2.11 [53.7]	2.11 [53.7]	--	--
	ϕ (max)	0.44 [11.1]	0.44 [11.1]	0.44 [11.1]	--	0.44 [11.1]	--	--	.38-16 .38-16	.38-16 .38-16	.38-16 .38-16	.38-16 .38-16	--	--
RVT65	X	0.85 [21.5]	0.50 [12.7]	0.85 [21.5]	--	1.19 [30.2]	--	--	0 [0]	1.60 [40.6]	1.60 [40.6]	0 [0]	--	--
	Y	1.09 [27.6]	0.61 [15.7]	0.15 [3.8]	--	0.61 [15.7]	--	--	0 [0]	-0.03 [-0.8]	1.26 [32.0]	1.23 [31.3]	--	--
	ϕ (max)	0.31 [7.9]	0.31 [7.9]	0.31 [7.9]	--	0.31 [7.9]	--	--	#10-24 #10-24	#10-24 #10-24	#10-24 #10-24	#10-24 #10-24	--	--
DG4S4 -02 (D06)	X	1.750 [44.5]	1.120 [28.5]	0.380 [9.7]	3.120 [79.3]	2.380 [60.5]	2.810 [71.4]	1.75 [44.5]	0 [0]	3.500 [88.9]	3.500 [88.9]	0 [0]	--	--
	Y	0.560 [14.3]	1.380 [35.1]	2.000 [50.8]	2.000 [50.8]	1.380 [35.1]	0 [0]	2.180 [55.4]	0 [0]	0 [0]	2.75 [69.9]	2.75 [69.9]	--	--
	ϕ (max)	0.580 [14.7]	0.580 [14.7]	0.580 [14.7]	0.580 [14.7]	0.580 [14.7]	0.440 [11.2]	0.440 [11.2]	.38-16 .38-16	.38-16 .38-16	.38-16 .38-16	.38-16 .38-16	--	--

Daman Products Company, Inc. • 1811 North Home Street • Mishawaka, IN 46545-7267
Tel: 800.959.7841 574.259.7841 • Fax: 800.241.7664 • Email: sales@daman.com • www.daman.com

“Obsolete Valve” Patterns

These drawings are for reference only. Please consult the appropriate standard when dimensions are critical. Dimensions may vary on our products. It should not be assumed that each hole shown is found on a given product.

Denison DD063

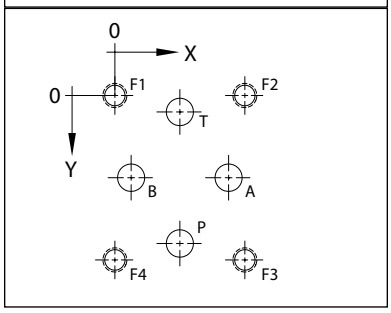

Denison D1D12

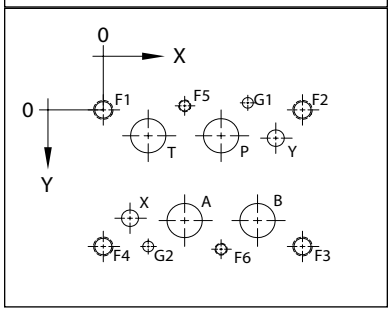

Denison D2D06

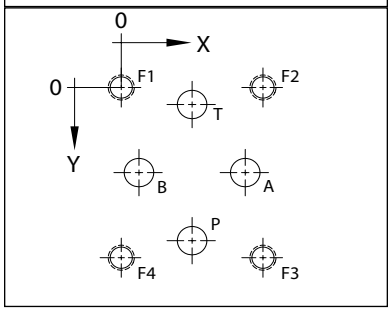

Denison D1D24

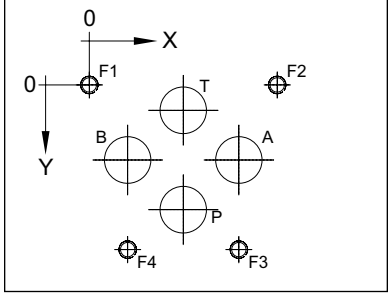

Pattern	Axis	P	A	T	B	X	Y	F1	F2	F3	F4	F5	F6	G1	G2
DD063	X	1.50 [38.1]	2.63 [66.7]	1.50 [38.1]	0.38 [9.5]	--	--	0 [0]	3.00 [76.2]	3.00 [76.2]	0 [0]	--	--	--	--
	Y	3.38 [85.7]	1.88 [47.6]	0.38 [9.5]	1.88 [47.6]	--	--	0 [0]	0 [0]	3.75 [95.3]	3.75 [95.3]	--	--	--	--
	ϕ (max)	0.63 [15.9]	0.63 [15.9]	0.63 [15.9]	0.63 [15.9]	--	--	.50-13 .50-13	.50-13 .50-13	.50-13 .50-13	.50-13 .50-13	--	--	--	--
D1D12	X	3.03 [77.0]	2.09 [53.2]	1.16 [29.4]	3.97 [100.8]	0.69 [17.5]	4.44 [112.7]	0 [0]	5.12 [130.2]	5.12 [130.2]	0 [0]	2.31 [58.7]	3.00 [76.2]	3.72 [94.5]	1.16 [29.4]
	Y	0.69 [17.5]	2.93 [74.6]	0.69 [17.5]	2.93 [74.6]	2.88 [73.0]	0.75 [19.0]	0 [0]	0 [0]	3.62 [92.1]	3.62 [92.1]	-0.09 [-2.4]	3.72 [94.5]	-0.19 [-4.8]	3.62 [92.1]
	ϕ (max)	0.91 [23.0]	0.91 [23.0]	0.91 [23.0]	0.91 [23.0]	0.44 [11.2]	0.44 [11.2]	.50-13 .50-13	.50-13 .50-13	.50-13 .50-13	.50-13 .50-13	.31-18 .31-18	.31-18 .31-18	0.28 [7.5]	0.28 [7.5]
D2D06	X	1.50 [38.1]	2.63 [66.7]	1.50 [38.1]	0.38 [9.5]	--	--	0 [0]	3.00 [76.2]	3.00 [76.2]	0 [0]	--	--	--	--
	Y	3.38 [85.7]	1.88 [47.6]	0.38 [9.5]	1.88 [47.6]	--	--	0 [0]	0 [0]	3.75 [95.3]	3.75 [95.3]	--	--	--	--
	ϕ (max)	0.63 [15.9]	0.63 [15.9]	0.63 [15.9]	0.63 [15.9]	--	--	.50-13 .50-13	.50-13 .50-13	.50-13 .50-13	.50-13 .50-13	--	--	--	--
D1D24	X	4.50 [114.3]	3.25 [82.5]	1.63 [41.3]	5.81 [147.6]	1.63 [41.3]	6.63 [168.3]	0 [0]	7.50 [190.5]	7.50 [190.5]	0 [0]	3.00 [76.2]	4.50 [114.3]	5.46 [138.6]	1.62 [41.3]
	Y	1.38 [35.0]	4.87 [123.8]	1.38 [35]	4.87 [123.8]	5.13 [130.2]	1.75 [44.5]	0 [0]	0 [0]	6.25 [158.8]	6.25 [158.8]	-0.31 [-7.9]	6.25 [158.8]	0 [0]	6.25 [158.8]
	ϕ (max)	1.25 [32.0]	1.25 [32.0]	1.25 [32.0]	1.25 [32.0]	0.44 [11.2]	0.44 [11.2]	.75-10 .75-10	.75-10 .75-10	.75-10 .75-10	.75-10 .75-10	.50-13 .50-13	.50-13 .50-13	0.28 [7.5]	0.28 [7.5]

Daman Products Company, Inc. • 1811 North Home Street • Mishawaka, IN 46545-7267
Tel: 800.959.7841 574.259.7841 • Fax: 800.241.7664 • Email: sales@daman.com • www.daman.com

Materials

Daman offers a wide range of material choices to meet most pressure rating, application, environment, and cost requirements. While the vast majority of products that we build have criteria that are best served by 6061-T6511 aluminum or 65-45-12 ductile iron, we also frequently review requests for custom products in other grades of aluminum and ductile iron, as well as stainless steel, carbon steel, and other advanced materials.

Aluminum

6061-T651 - Used in our entire aluminum standard product line and ninety-nine percent of our custom aluminum products. Items built from extruded bar are -T6511 temper and items built from plate are -T651 temper.

2024-T351 - Used for a small number of custom parts when specified. Usually it is chosen over 6061 when improved material strength is needed. The majority of what we purchase is plate.

7075-T351 - Used for a small number of custom parts when specified. Usually it is chosen over 6061 when improved material strength is needed. The majority of what we purchase is plate.

Ductile

65-45-12 - Used in our entire ductile standard product line and nearly all of our custom ductile products.

80-55-06 - Used for a very small number of custom parts. Usually it is chosen over 65-45-12 when improved material strength is needed.

Ductile Iron versus Carbon Steel

65-45-12 ductile iron has several qualities that make it the preferred material choice for applications of 5000 PSI maximum operating pressure. The main advantage over carbon steel is a grain structure that allows for ease of manufacturing, uniform corrosion resistance, consistent material quality, and improved dampening characteristics.

Stainless Steel

Stainless steel manifolds are often found in washdown, semiconductor, oil and gas, marine, and other offshore applications. Stainless steel is corrosion resistant, and is very durable. Most Daman standard products can be produced in stainless steel and we are continuously expanding our stainless machining capabilities. All Daman stainless steel standard parts are passivated. Contact us with any stainless steel standard or custom opportunity.

Other Materials

Daman custom product designs include industry common steels such as 1018 and 11L17. Daman has experience manufacturing custom products from many other materials including brass. Contact us to discuss your material requirements.

Daman Products Company, Inc. • 1811 North Home Street • Mishawaka, IN 46545-7267
Tel: 800.959.7841 574.259.7841 • Fax: 800.241.7664 • Email: sales@daman.com • www.daman.com

Tips For Material Selection

Material selection requires the consideration of several hydraulic system characteristics such as pressure, application duty cycle, and environmental atmosphere. Working pressure should be considered in accordance with ISO 4413 to determine appropriate material type. The characteristics below are common considerations for aluminum or ductile alloy.

Hydraulic System Characteristics

- The most obvious hydraulic criteria for material selection is system operating pressure. We rate nearly all of our 6061-T6 aluminum standard products, and all Daman-designed custom parts for 3000 PSI maximum operating pressure, with a 3:1 safety factor.
- We rate nearly all of our 65-45-12 ductile standard products, and all Daman-designed ductile custom parts for 5000 PSI maximum operating pressure, with a 3:1 safety factor.
- This rating is set based on the assumption that the system is properly designed, assembled, and maintained for its application and environment, and that it is used in an average duty cycle application.
- Customer designs must be reviewed for wall thickness integrity prior to assigning a Daman pressure rating. Following are some examples of hydraulic system characteristics that may necessitate overriding pressure rating as the determining factor in material selection.

Design

- High velocities
- Proper valve use
- Water and fluid

Application

- High duty cycle
- Shock and spike
- Layout

Environment

- Caustic solutions

Daman Products Company, Inc. • 1811 North Home Street • Mishawaka, IN 46545-7267
Tel: 800.959.7841 574.259.7841 • Fax: 800.241.7664 • Email: sales@daman.com • www.daman.com

Surface Treatments

Surface finish treatments for a manifold or related product are for improved cosmetic appearance, corrosion resistance, improved paint adhesion, or increased surface hardness. The type of material and the purpose for the coating can determine which coating to use. Below are general overviews of anodizing and electroless nickel. The following page specifies our processes as well as ordering information.

Surface Treatments Overview

Anodize

Application: Aluminum parts

- Sulfuric acid anodizing is applied utilizing a 10% to 20% sulfuric acid bath at 60°F to 80°F. Electrical current (2 to 9 amps per sq. ft.) is passed through the solution to the positively charged aluminum part (Anode). A reaction takes place on the surface of the aluminum part that changes the aluminum to aluminum oxide. Aluminum oxide in this form is a crystalline structure that is practically nonconductive. The reaction will continue, and the film will grow, until its dielectric properties do not allow electrical current to continue to pass through the film. This process produces a nearly clear oxide coating which is usually less than 0.001” thick. The coating is then sealed to improve corrosion protection or colorfastness when dyed.
- Specifically this coating is referred to as sulfuric anodize, clear anodize, or Type II anodize.
- A dye may be used to add color to the process. Common available colors are black, red, or blue.
- Anodizing provides good corrosion protection in mild environments and minimum wear protection.

Electroless Nickel

Application: Ductile iron parts

- The deposition of the nickel is autocatalytic. This means that the nickel is depostited on the substrate material without the use of external electrical current. Electroless nickel is applied by submerging the part in a well-agitated bath which operates between 180 and 190 degrees F.
- An extensive cleaning process to remove all dirt, oils and oxides prior to plating is often more involved than the plating process itself. This ensures good adhesion of the nickel to the ductile substrate.
- Phosphorus is present in all electroless nickel. The higher the level, the better the corrosion resistance.
- ROHS compliant.
- Free of cadmium, lead, chrome.
- Professional appearance.
- Excellent results in industrial applications, mining, and railroad applications.
- Not suitable for applications where a specific salt spray hours rating is required.

Daman Products Company, Inc. • 1811 North Home Street • Mishawaka, IN 46545-7267
Tel: 800.959.7841 574.259.7841 • Fax: 800.241.7664 • Email: sales@daman.com • www.daman.com

Coatings Available For Daman Standard Product Lines

Anodizing options available for all catalogued aluminum parts:

"-BA" added to the end of the part number for black anodize.
"-CA" added to the end of the part number for clear anodize.

Electroless nickel option available for all catalogued ductile parts:

"-EN" added to the end of the part number for electroless nickel.

"-BA" Coating: 6061-T6 Aluminum with Black Anodize

Process used conforms to MIL-A-8625F Type II, Class 2

- Dyed black.
- Nickel acetate sealed.
- Anodic thickness varies from approximately 0.0002 - 0.0008 based on machined features.
- Sample salt spray testing had acceptable performance at 336 hrs.
- One or more mounting holes may be unanodized due to racking requirements.

"-CA" Coating: 6061-T6 Aluminum with Clear Anodize

Process used conforms to MIL-A-8625F Type II, Class 1

- No added color; appearance is of matte aluminum.
- Nickel acetate sealed.
- Anodic thickness varies from approximately 0.0002 - 0.0008 based on machined features.
- Sample salt spray testing had acceptable performance at 336 hrs.
- One or more mounting holes may be unanodized due to racking requirements.

"-EN" Coating: D-65-45-12 Ductile Iron with Electroless Nickel Coating

Process used conforms to MIL C26074, AMS 2404, ASTM B1733

- NOTE: Thickness supplied is less than A, B or C definition, therefore no defined salt spray hour rating (Coating thickness is 0.0002 - 0.0004 inch).
- Chemically applied completely uniform deposit thickness.
- High Phosphorus - 10-13 weight %.
- Uniform thickness; excellent hardness; resistant to scratches, strikes and chemicals.
- Meets or exceeds adhesion testing in ASTM B571.

Performance of surface treatments varies by application and environment. No specific corrosion resistance is warranted.

Daman Products Company, Inc. • 1811 North Home Street • Mishawaka, IN 46545-7267
Tel: 800.959.7841 574.259.7841 • Fax: 800.241.7664 • Email: sales@daman.com • www.daman.com

THE DAMAN TRIGGER SYSTEM

CUSTOM MANIFOLDS IN 24 HRS.

Trust Daman to manage your low and high volume repetitive, Custom Manifold parts.

Custom Manifolds ship in 24 hours with Daman's Trigger System. Utilizing lean kanban technology, Daman's Trigger System offers a simple way for you to order Custom Manifolds without forecasting, lead times, inventory micro-management and rigid ordering or blanket systems.

Learn more at www.daman.com or call 800.959.7841

Daman®

Daman®

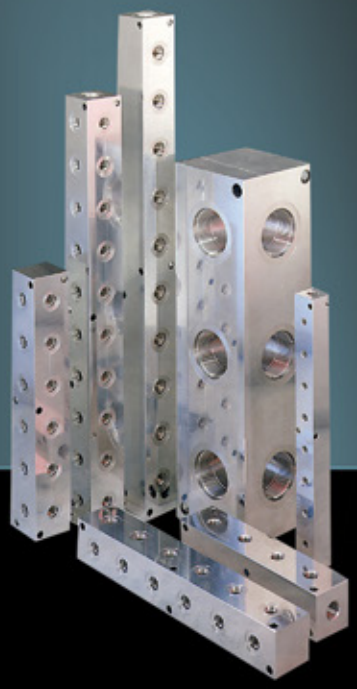

IN-STOCK STANDARD MANIFOLDS GUARANTEED TO SHIP WITHIN 24 HOURS

Our extensive in-stock inventory of Standard Manifolds is constantly being replenished to meet industry buying trends. We can ship stocked products within 24 hours, while eliminating the need for complex forecasting and stringent minimum inventory commitments. Daman is the dependable partner you need to ensure that Standard Manifold products are always available when you need them.

HELPING OUR CUSTOMERS SUCCEED
40th
est. 1976
DAMAN PRODUCTS

1811 North Home Street
Mishawaka, Indiana 46545-7267 USA
North America: 800.959.7841 · Fax: 800.241.7664
International: Tel: +1.574.259.7841 · Fax: +1.574.259.7665
Email: sales@daman.com
Web: www.daman.com

Please note: All information in this catalog is the latest available at the time of publication approval. Daman reserves the right to make changes and to discontinue products without notice or obligation.

© Daman Products Company, Inc. 2016 DAM-4058 · 5M Printed in U.S.A.